May 30, 1933. J. C. SAUNDERS 1,911,718

HAMMER MILL FOR GRINDING OR PULVERIZING VARIETIES OF MATERIALS

Filed Nov. 21, 1931 3 Sheets-Sheet 1

Fig. 1.

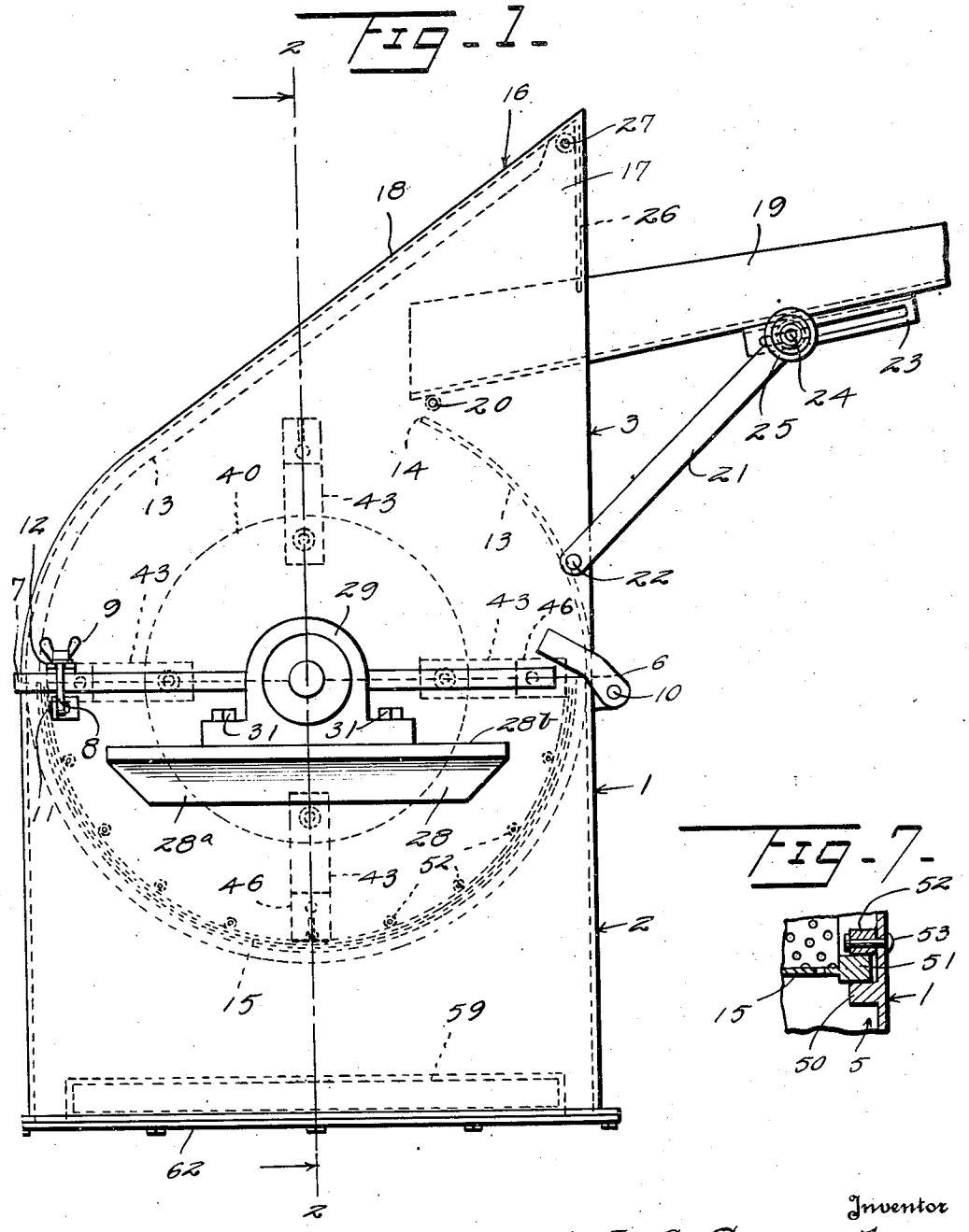

Fig. 7.

Inventor

J. C. Saunders

By Watson E. Coleman

Attorney

May 30, 1933. J. C. SAUNDERS 1,911,718

HAMMER MILL FOR GRINDING OR PULVERIZING VARIETIES OF MATERIALS

Filed Nov. 21, 1931 3 Sheets-Sheet 2

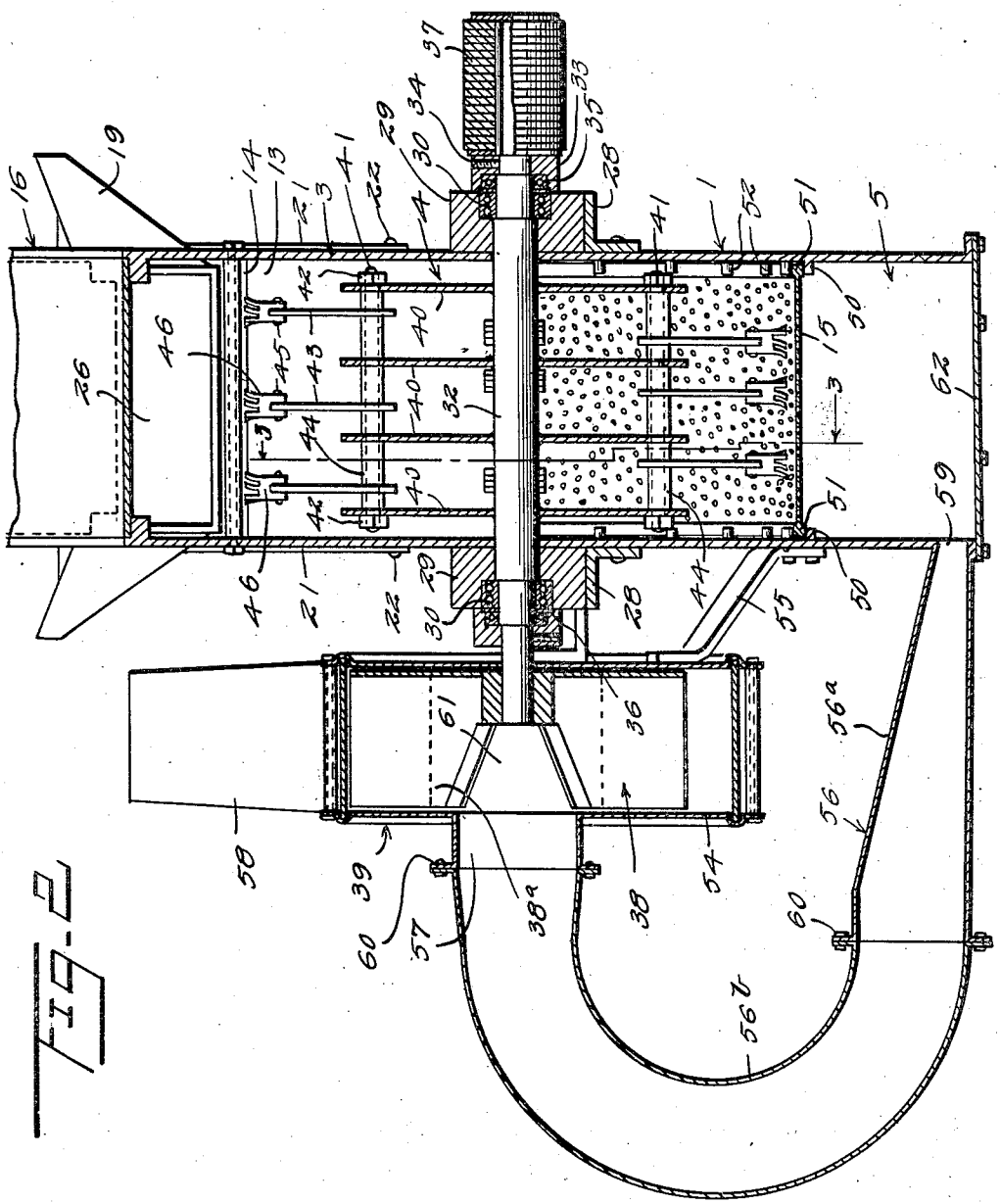

Fig. 2

Inventor
J. C. Saunders

By Watson E. Coleman
Attorney

May 30, 1933. J. C. SAUNDERS 1,911,718

HAMMER MILL FOR GRINDING OR PULVERIZING VARIETIES OF MATERIALS

Filed Nov. 21, 1931 3 Sheets-Sheet 3

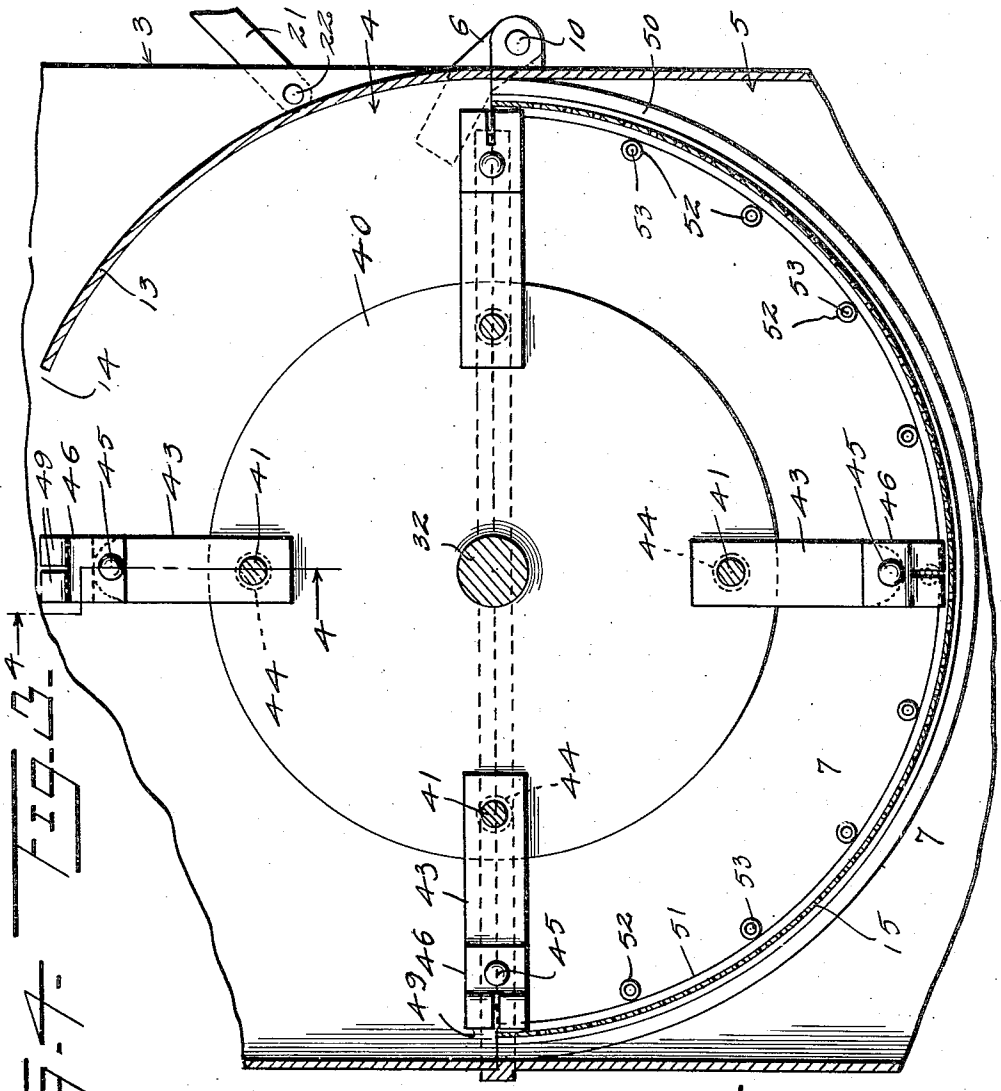

FIG. 4.

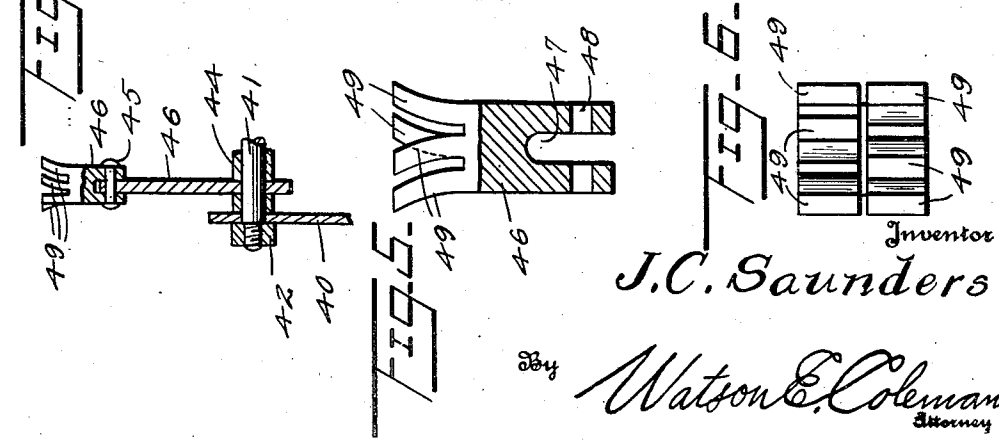

FIG. 7.

FIG. 5.

FIG. 6.

Inventor

J. C. Saunders

By Watson E. Coleman

Attorney

Patented May 30, 1933 1,911,718

UNITED STATES PATENT OFFICE

JAMES C. SAUNDERS, OF BAINBRIDGE, GEORGIA, ASSIGNOR, BY MESNE ASSIGNMENTS, TO GIANT HAMMER MILL COMPANY, OF BAINBRIDGE, GEORGIA

HAMMER MILL FOR GRINDING OR PULVERIZING VARIETIES OF MATERIALS

Application filed November 21, 1931. Serial No. 576,577.

This invention relates to hammer mills of the type including a revolving cylinder and hammers swingingly connected thereto, and has for one of its objects to improve and simplify the general construction of mills of this character to the end that their efficiency may be materially increased, and to the end that their cost of construction and operation may be materially reduced.

The invention has for a further object to provide a hammer mill of the character stated which will be practically indestructible, of minimum weight and of maximum strength and durability, and which will be adapted to grind or pulverize a comparatively large amount of material with the expenditure of comparatively little power.

The invention has for a further object to provide a hammer mill of the character stated wherein the cylinder will be so mounted and the hammers so connected to the cylinder as to cause them to operate with comparatively little friction, and wherein the hammers will have surfaces or cutting edges that will present an overlapping, unbroken and continuous grinding surface.

The invention has for a further object to provide a hammer mill of the character stated which will be capable of being readily adapted to grind all kinds of dry feeds, such for instance, as corn on the cob, corn shucks, corn cobs and stalks, oats, beans, hay, hulls and cotton seed, which will be capable of being readily adapted to grind clays, shells, meat scraps, lime rock and bones, which will be capable of being readily adapted to pulverize brans, screenings, meals, wholewheat flour, and clays, and which will also be capable of being readily adapted to pulp apples.

The invention has for a further object to provide a hammer mill of the character stated which may be provided with a suction conveyor system to carry off the ground or pulverized material or which may be so arranged that the ground or pulverized material may drop or be shoveled therefrom.

With the foregoing and other objects in view, the nature of which will appear as the description proceeds, the invention consists in the construction, combination and arrangement of parts hereinafter fully described and claimed, and illustrated in the accompanying drawings, wherein:—

Figure 1 is a view in side elevation of a hammer mill constructed in accordance with my invention;

Figure 2 is a sectional view taken on the vertical plane indicated by the line 2—2 of Figure 1;

Figure 3 is a sectional view on an enlarged scale taken on the vertical planes indicated by the line 3—3 of Figure 2;

Figure 4 is a detail sectional view taken on the vertical planes indicated by the line 4—4 of Figure 3;

Figure 5 is a view partly in vertical section and partly in elevation of one of the hammer heads;

Figure 6 is a top plan view of one of the hammer heads, and

Figure 7 is a detail sectional view taken on the plane indicated by the line 7—7 of Figure 3.

The hammer mill comprises a casing 1 which consists of lower and upper sections 2 and 3, respectively, and which has an upper compartment or chamber 4 and a lower compartment or chamber 5. The material to be ground or pulverized is treated in the chamber 4, and the ground or pulverized material passes from this chamber into the chamber 5 from which it may be withdrawn by a suction conveyor system, or from which it may be shoveled or from which it may discharge by gravity into a hopper, bin or the like. The walls of each of the casing sections 2 and 3 are made from boiler plate steel, and are arc welded together. The upper casing section 3 which rests upon the lower casing section 2, is secured to the lower section by hinges 6, a flange 7 and bolts 8 having thumb nuts 9. The pintles 10 of the hinges 6 are located at and below the rear corner of the upper casing section 3 so as to permit this section to be swung to one side of the lower casing section 2 and thus give free access to every part of the grinding or pulverizing chamber 4.

The flange 7 is carried by the lower casing

section 2 and embraces the front and sides of the upper casing section 3. The bolts 8 are pivotally connected, as at 11, to the sides of the lower casing section 2 for movement into and out of engagement with notched lugs 12 carried by the sides of the upper casing section 3. The hinges 6, the flange 7 and the bolts 8 and nuts 9, which latter contact with the upper sides of the lugs 12, positively hold the upper casing section 3 against accidental displacement from the lower casing section 2.

The grinding or pulverizing chamber 4 is of cylindrical formation, and is provided in the upper side of its top wall 13 with a feed opening 14 which is large as compared with the axial and diametrical dimensions of the grinding or pulverizing chamber so as to permit large quantities of the material to be treated to be fed to this chamber. The bottom wall 15 of the grinding or pulverizing chamber 4 consists of a metal plate perforated to provide a screen through which the ground or pulverized material passes to the receiving chamber 5. A hood 16 having vertical side walls 17 and a downwardly and forwardly inclined top wall 18 forming continuations of the walls of the upper casing section 3, are arranged over the feed opening 14, and is open at its rear side. A feed trough 19 extends into the hood 16 through the open rear side thereof, and has its front or discharge end positioned directly above the feed opening 14. The feed trough 19 has its front end pivoted, as at 20, to the hood walls 17 to the end that it may be raised and lowered and thus regulate the feed of the material to the grinding or pulverizing chamber 4.

The feed trough 19 is supported in its adjusted position by bars 21 which are pivoted, as at 22, to the side walls of the upper casing section 3 and which incline upwardly and rearwardly from their pivots. The bars 21 are pivotally and slidably connected at their upper ends to the feed trough 19 so as to permit the raising and lowering of the feed trough, and this connection is established by slotted guides 23 secured to and extending longitudinally of the bottom of the feed trough, bolts 24 carried by the bars and passing through the slots of the guides, and nuts 25 mounted upon the bolts. The nuts 25 are adapted to be loosened to permit the feed trough 19 to be adjusted upwardly and downwardly, and are adapted to be tightened to secure the feed trough in adjusted position. A gate 26 located in the open rear side of the hood 16 above the feed trough 19 and with its lower end portion arranged within the feed trough, is swingingly mounted at its upper end, as at 27. The gate 26 may swing forwardly under the influence of the material passing from the feed trough 19 to the grinding or pulverizing chamber 4. It is, however, held against any rearward movement by the top wall 18 of the hood 16. The location of the discharge end of the feed trough 19 within the hood 16, the downwardly and forwardly inclined top wall 18 of the hood, and the gate 26 insure the positive feed of the material from the trough to the grinding or pulverizing chamber 4.

Brackets 28 of angular formation in cross section, and presenting vertical flanges 28*a* and horizontal flanges 28*b*, have their vertical flanges arc welded to the side walls of the lower casing section 2. Cast iron and dust proof housings 29 for self-alining double ball bearings 30 are positioned upon and secured, as at 31, to the horizontal bracket flanges 28*b*. The bearings 30 are located in alinement with the axis of the grinding or pulverizing chamber 4, and journaled in the bearings is a solid steel shaft 32. The shaft 32 extends across the grinding or pulverizing chamber 4 and laterally beyond the housings 29. The end portions of the shaft 32 are reduced and pass through the bearings 30, and mounted thereon outwardly of the bearings are collars 33 which are secured in place by set screws 34 and in the inner sides of which are recessed thrust bearings 35 separated from the bearings 30 by steel washers 36. A power pulley 37 is fixed to one end of the shaft 32, and the impeller 38 of a suction fan 39 is secured to the other end of the shaft.

Hardened steel discs 40 are arranged in parallel relation on the shaft 32 within the grinding or pulverizing chamber 4, and are arc welded to the shaft. The discs 40 are arranged in equally spaced relation on the shaft 32, and the outermost of the discs are spaced from the side walls of the housing 1. Rods or shafts 41 pass transversely through the discs 40 near the peripheries of the latter, and are secured in place by nuts 42 mounted on their ends and contacting with the outer sides of the outermost of the discs 40.

Hardened steel hammer arms 43 are pivoted each at one end to the rods 41, and are held against movement in the direction of the length of the rods by steel spacing sleeves 44 mounted upon the rods between the discs 40 and the hammer arms. The free ends of the hammer arms 43 are rounded, and pivotally secured thereto, as at 45, are hammer heads 46. The hammers consisting of the arms 43 and heads 46 are arranged in staggered relation on the rods 41 so as to present while rotating an overlapping, unbroken and continuous grinding surface. The spacers 44 are rotatably mounted on the rods 41 so as to permit the hammers to have a swinging action on the rods and so as to reduce to the minimum the frictional resistance offered to the swinging movement of the hammers. The hammer heads 46 are similar and made from manganese steel so as to afford superior cutting

edges which will last indefinitely. The hammer heads 46 are provided with slots 47 for the reception of the free ends of the hammer arms 43, and are provided with openings 48 for the reception of the pivots 45. The hammer heads 46 are provided at their outer ends with rows of grinding or crushing elements or fingers 49. The rows of elements 49 of the hammer heads 46 are arranged transversely with respect to the path of rotation of the heads. The rows of elements 49 of each hammer head 46 are relatively spaced. The end elements of the rows may be curved outwardly, and the inner elements of the respective rows may be curved in opposite directions, as shown in Figures 5 and 6. If desired, however, one end element of each row may be straight and the other elements curved, with the curved elements of the respective rows extending in opposite directions, as shown in Figures 2 and 4. The elements 49 present a multiplicity of cutting edges, certain of which sets only are active. When the active set of cutting edges become dull, the hammer heads 46 may be reversed on the hammer arms 43 to present the other cutting edges in position for use.

Arcuate steel ribs 50 are arc welded to the inner surfaces of the side walls of the casing 1 with their concave sides uppermost to provide supports for the screen 15. The side edges of the screen 15 are thickened, as shown at 51, and rest upon the supports 50. The screen is held against upward displacement from the supports 50 by steel rollers 52 which are journaled on pins 53 carried by the side walls of the casing 1, the steel rollers contacting with the thickened edges 51 of the screen. When the upper casing section 3 is thrown to one side the screen 15 may be readily withdrawn from the grinding or pulverizing chamber 4 to permit the substitution therefor of a screen having larger or smaller openings and thus adapt the mill for crushing or grinding any of the materials hereinbefore referred to.

The suction fan casing 54, which is also made from boiler plate steel, is supported from the casing 1 by bracket arms 55. A conduit 56 consisting of sections 56*a* and 56*b*, extends from the chamber 5 to the intake 57 of the suction fan 39, to the end that the ground or pulverized material may be drawn from this chamber to the fan, the fan discharging the material therefrom through an outlet spout 58. The conduit section 56*a* communicates at one end with a slot 59 formed in one side wall of the chamber 5, and is arc welded to this wall. The conduit section 56*b* is detachably connected, as at 60, to the section 56*a* and to the fan inlet 57. When the conduit section 56*b* is removed, ready access may be had to the interior of the fan 39. The blades 38*a* of the impeller 38 are each provided with an intake 61 to permit the ground or pulverized material to readily enter the fan.

When the hammer mill is used for grinding or crushing material that cannot be drawn from the chamber 5 by the suction fan 39, the conduit section 56*b* is removed, and the outer end of the conduit section 56*a* is closed, and the bottom wall 62 of this chamber is removed so as to permit the material to fall from the chamber into a suitable receptacle provided therefor. If desired the suction fan 39 and its conduit 56 may be omitted, and a slot or opening 59 may be used for shoveling the pulverized material from the chamber, or the bottom wall 62 of the chamber may be removed to permit the material to fall therefrom.

In practice, the hammers are rotated in the direction of the front side of the casing 1. Due thereto and due to the location of the feed opening 14 in the upper side of the top wall of the grinding or pulverizing chamber, the material being ground or pulverized will not be discharged from said opening. This is materially aided by the top wall 18 of the hood 16 which occupies a downwardly and forwardly inclined position above the feed opening 14 and which also materially assists in the direction of the material into the grinding or pulverizing chamber 4. Whether the material treated is finely or coarsely ground or pulverized, depends upon the size of the openings in the screen 15. As the screen 15, since it is supported by the curved guides 50 and held in place by the rollers 52, may be easily withdrawn from the mill and another screen readily inserted in the mill after the upper casing section 3 has been swung to one side, the machine may be readily adapted for finely or coarsely grinding or pulverizing material.

As the hammers consisting of the arms 43 and heads 46 are arranged in staggered relation, as they swing straight out from the rods 42 when the mill is in operation, and due to the width of the hammer heads, the material is ground or pulverized within a comparatively short time. As the casing 1 and screen 15 are made from steel, and as the hammer mechanism including the shaft 32, discs 40, and arms 43 are made from steel and the heads 46 made from manganese steel, the mill is exceptionally strong. Furthermore, the hammer mechanism is light in weight, well balanced, and capable of being operated to act on a comparatively large amount of material with the expenditure of comparatively little energy.

While I have described the principle of the invention, together with the structure which I now consider the preferred embodiment thereof, it is to be understood that the structure shown is merely illustrative and that such changes may be made, when de-

sired, as fall within the scope of the invention as claimed.

I claim:—

1. In a mill of the character set forth, a hammer including an arm, a head pivotally connected to the arm and provided with front and rear rows of teeth or crushing elements, the rows of teeth being arranged parallel to the front and rear faces of the head and some of the teeth of the respective rows curving in the direction of the lateral sides of the head and the remaining teeth of the respective rows curving in opposite directions.

2. In a mill of the character set forth, a casing having lower and upper sections, a hinge connecting the upper section to the lower section for movement into closed and opened position with relation thereto, means securing the upper section in closed position with relation to the lower section, arcuate guides secured to the side walls of the lower section with their concave sides uppermost, an arcuate perforated plate resting upon the guides, rollers journaled on the side walls of the casing above the guides and contacting with the edges of the perforated plate, a rotatable shaft extending across the casing in concentric relation to the perforated plate, and hammers connected to the shaft.

3. In a mill of the character described, a hammer comprising an arm portion and a head portion, said arm having an aperture at the end remote from the head and said head being relatively thick and provided with two rows of teeth extending in a direction at right angles to the direction in which the hammer moves when in use, certain of the teeth of one row being curved in the direction of the row and certain of the teeth of the adjacent row being curved in the opposite direction.

4. In a mill of the character described, a hammer having an arm portion and a head at one end of the arm portion, said arm portion being of materially greater width than thickness, said head being of substantially the same width as the arm and of materially greater thickness than the same and having a slot cut in and across the face remote from the arm in a direction at right angles to the width of the arm and a plurality of slots cut in the said face transversely of the first slot to form two rows of teeth, certain of the teeth of one row being curved in one direction lengthwise of the row and certain of the teeth of the other row being curved in the opposite direction.

In testimony whereof I hereunto affix my signature.

JAMES C. SAUNDERS.