April 22, 1952 M. WEBER 2,594,106

CLOCK SETTING MECHANISM

Filed Oct. 22, 1947

Fig.1

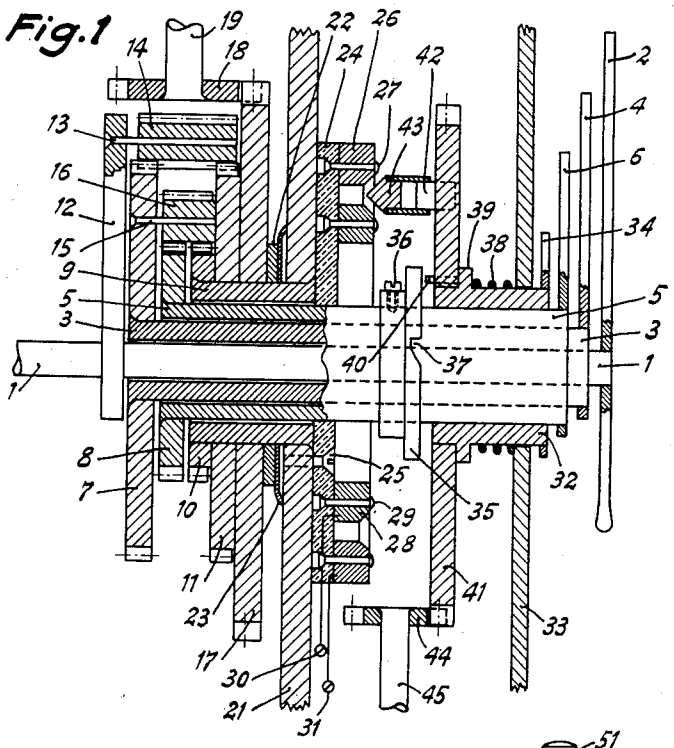

Fig.2

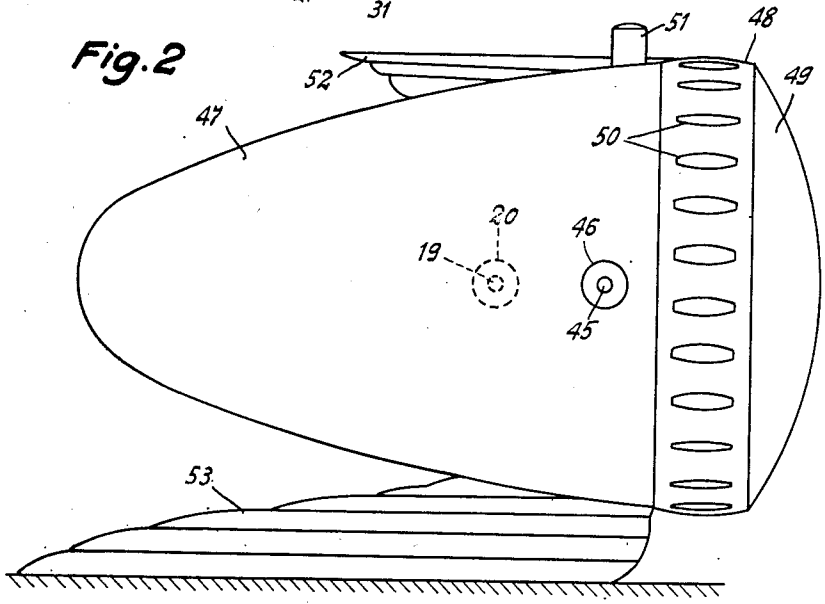

Inventor:
Max Weber
by Michael [illegible]

Patented Apr. 22, 1952

2,594,106

UNITED STATES PATENT OFFICE

2,594,106

CLOCK SETTING MECHANISM

Max Weber, Geneva, Switzerland

Application October 22, 1947, Serial No. 781,296
In Switzerland September 29, 1945

Section 1, Public Law 690, August 8, 1946
Patent expires September 29, 1965

1 Claim. (Cl. 58—80)

1

The present invention relates to a clock in which the movement is considerably simplified by the use of a new type of reduction gear.

According to the invention the movement has reduction gear for the reduction of the rotary speed of the second-hand spindle transmitted to the minute-hand spindle which is co-axially mounted on the former, and of the rotary speed of the minute-hand spindle transmitted to the hour-hand spindle which is co-axially mounted on the minute-hand spindle.

For driving the clock movement it is of advantage to use a synchronous motor by which the second-hand spindle is actuated.

The clock may be designed as an electric alarm-clock, the circuit for the operation of the acoustic alarm device being closed by a contact device formed by two contact rings arranged concentrically to each other and a wedge contact dropping between said two contact rings and adjustable in relation to a release organ rigidly mounted on the hour-hand spindle.

The electric alarm-clock can be provided with a built-in light, preferably in the form of a neon tube located on the periphery of the dial.

The electric alarm-clock may moreover be combined with an electric cigarette-lighter.

In the drawing a preferred embodiment of the invention is illustrated as follows:

Fig. 1 is a longitudinal section through the reduction gear and the alarm contact device of an electric alarm-clock, and

Fig. 2 is a side elevation of the electric alarm-clock.

In the illustrated embodiment the clock movement is driven by a synchronous motor, not shown in the drawing, in such a way that the second-hand spindle 1, together with the second hand 2, performs one revolution per minute. On the second-hand spindle 1 the hollow spindle 3 of the minute-hand 4, and on this hollow spindle 3, the hollow spindle 5 of the hour-hand 6, are loosely mounted so as to be rotatable. At the rear end of the minute-hand spindle 3 of cog-wheel 7, and at the rear end of the hour-hand spindle 5 a cog-wheel 8 are mounted. In addition thereto a bush 9 is rotatably mounted on the hour-hand spindle while a cog-wheel 10 and a cog-wheel 11 are rigidly mounted on bush 9. A bracket 12 is fastened to the second-hand spindle 1, which bracket carries at its free end a spindle 13 and a planet wheel 14 rotatably mounted on the latter. This planet wheel meshes with the cog-wheel 7 and cog-wheel 11. The cog-wheel 7 has 60 teeth while the cog-wheel 11 has only 59

2

teeth. If the cog-wheel 11 is held immovably and the second-hand spindle 1 is rotated through 360°, the planet wheel 14 is rolled around the periphery of the cog-wheel 11 and imparts to the cog-wheel 7 (minute wheel) an advance by one tooth, i. e. by 1/60 its circumference. In the same way as to the bracket 12, a spindle 15 is also fastened to the minute wheel 7, on which spindle a planet wheel 16 is rotatably mounted. The latter engages the cog-wheels 8 and 10. The cog-wheel 8 has 24 teeth while the cog-wheel 10 has 22 teeth. If the cog-wheel 10 is held immovably and the planet wheel 16 rolled around the cog-wheel 10 by rotation of the minute-wheel 7 through 360°, the cog-wheel 8 (hour-wheel) is advanced by two cogs, i. e. by one-twelfth of its circumference. On the bush 9 a cog-wheel 17 of a mitre gear 17, 18 is also rigidly mounted. By turning a setting knob 20 mounted on a spindle 19 of the cog-wheel 18 outside the alarm clock casing (Fig. 2) the hands 4 and 6 can be set. Since the minute-wheel 7 and the hour-wheel 8 are adjusted by the rotation of the interconnected wheels 17, 11 and 10 they cause the planet wheels 14 and 16 to rotate in opposite directions. In a plate 21 rigidly mounted in the alarm-clock casing, the bush 9 is rotatably mounted. By the friction disc 22 and the spring disc 23, however, bush 9 is held motionless in relation to the plate 21 so that the drive of the clock cannot move the cog-wheels 10 and 11 which are rigidly mounted on the bush 9. In setting the hands by means of the mitre gear this friction is overcome. An insulating plate 24 is firmly secured to the front of the plate 21 by means of screws 25. To this insulating plate two insulated contact rings 26 and 28 are secured by means of countersunk screws or rivets 27 and 29. The contact rings are of different diameter and concentric, and are connected by conductors to screw-terminals 30 and 31, which lie in the circuit of an electric alarm device. By insertion of a wedge contact 43 in the space between the two contact rings the circuit is closed and the alarm rings. The release device for closing the contact device has a sleeve 32 mounted so as to be axially displaceable on the hour-hand spindle 5, said sleeve passing through the dial 33 and carrying at its foremost extremity the hand 34 which indicates the time for which the alarm is set. Also on the hour-hand spindle 5 a ring 35 is fixed behind the sleeve 32 by means of a screw 36, said ring being provided with a release notch 37. A spring 38, which abuts on one hand against the dial 33 and on the other hand against a collar 39 on the sleeve 32, tends to press the sleeve 32

against the ring. A pin **40** projecting beyond the rear extremity of the sleeve **32**, bears against the ring **35** under the action of the spring **38** and, upon passing the release notch **37** as a result of the rotation of the hour-hand spindle with the ring **35**, drops into said notch **37**. At the rear end of the sleeve **32** a cog-wheel **41** is mounted which carries the insulated wedge contact **43** insulatedly mounted in the pin **42**, said wedge contact **43** connecting the interruptor contact rings **26** and **28**, and thus closing the circuit operating the alarm-device when the pin **40** drops into the release notch **37**. A cog-wheel **44**, which engages with the cog-wheel **41** so as to form a mitre gear for setting the alarm hand **34**, is mounted on a spindle **45** which carries a setting alarm hand **34**. Spindle **45** carries a setting knob **46** outside the alarm-clock casing. A neon tube is located around the periphery of the dial **33** for illuminating the dial permitting the alarm-clock to be used as a bed-side lamp. The alarm-clock casing **47** is of streamlined design, its lid being provided with ventilation slots **50** in the socket **48** for the glass **49** to prevent overheating of the alarm-clock casing by the neon tube. **51** designates a switch for switching on the alarm. The wing **52** may be designed as a switch for the switching on and off of the neon tube. The electric cable is introduced through the base **53** of the alarm-clock casing, so that the alarm-clock may be connected by a plug to a lighting mains socket.

The operation of the alarm clock is as follows: When the second-hand spindle **1** rotates, the planet wheel **14** turns with it and rolls along the periphery of the frictionally arrested cog-wheel **11**, so that during a revolution of 360° the minute-wheel **3** is turned only $\frac{1}{60}$ of its circumference owing to the difference in the number of teeth, that is to say that the minute-hand **4** is turned through a division on the dial corresponding to one minute while the second-hand rotates through 360°. During one complete revolution of the minute-wheel **7** the planet wheel **16** is rolled along the periphery of the frictionally held cog-wheel **10**, the hour wheel **8** being turned, one-twelfth of its circumference owing to the difference in the number of teeth. In other words, the hour-hand rotates for one complete revolution of the minute-hand, to an extent corresponding to one hour on the dial.

In putting the clock back or forward by the rotary knob **20** and the mitre gear **17** and **18**, the planet wheels **14** and **16** are rolled along the peripheries of the cog-wheels **10** and **11** respectively

by the rotation of the cog-wheels **10** and **11** during a complete revolution of the cog-wheel **17**, the minute and hour wheels being thus turned forwards or backwards in accordance with the gear ratio. The hands can be regulated without disturbing the running of the clock in any way.

The reduction gear described can readily be used for spring-actuated clocks.

While a preferred embodiment of the invention is herein disclosed, it is to be understood that some changes may be made in the arrangement, construction and combination of the various parts of my invention, and it is my intention to cover by my claim such changes as may reasonably be included within the scope of the invention.

I claim as my invention:

In a clock train, in combination, a second hand shaft, a hollow minute hand shaft coaxially mounted on said second hand shaft, a hollow hour hand shaft coaxially mounted on said minute hand shaft, a bracket fixedly mounted on said second hand shaft, a rotary planetary pinion stud-mounted on said bracket, a spur wheel fixedly mounted on said minute hand shaft and meshing with said planetary pinion, a second rotary planetary pinion stud-mounted on said spur wheel, a second spur wheel fixedly mounted on said hour hand shaft and meshing with said second planetary pinion, a sleeve loosely mounted on said hour hand shaft, a third spur wheel fixedly mounted on said sleeve and meshing with said first planetary pinion, a fourth spur wheel fixedly mounted on said sleeve and meshing with said second planetary pinion, friction means adapted to prevent rotation of said sleeve under normal operative conditions, the number of teeth of said third and fourth spur wheels slightly differing from the number of teeth of said first and second spur wheels, the ratio being such as to obtain the proper reduction between the second, minute, and hour hand shafts, and means for rotating said sleeve against action of said friction means for setting the hand shafts.

MAX WEBER.

REFERENCES CITED

The following references are of record in the file of this patent:

UNITED STATES PATENTS

Number	Name	Date
1,813,942	Malles	July 14, 1931
2,026,368	Warren	Dec. 31, 1935
2,198,632	Mullan	Apr. 30, 1940