May 13, 1958 E. L. SCHLAGE ET AL 2,834,194

LOCK SPINDLE CONSTRUCTION

Filed Aug. 6, 1956 3 Sheets-Sheet 1

FIG_1

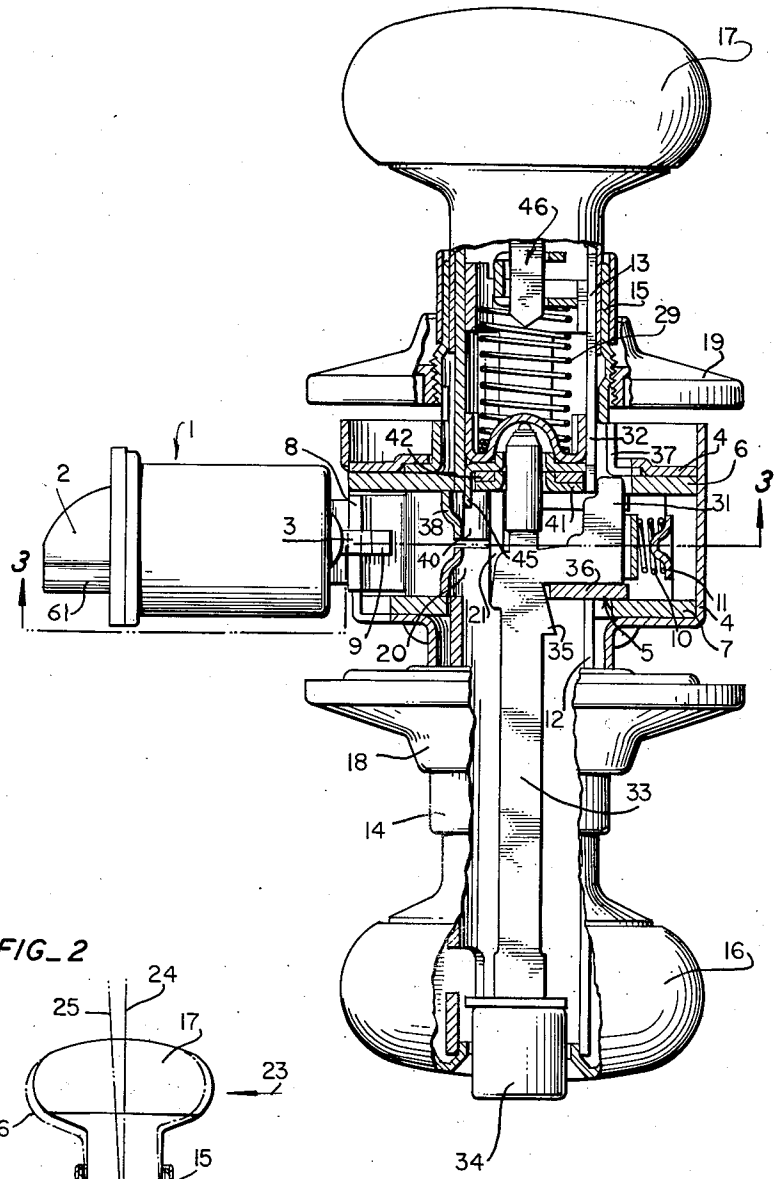

FIG_2

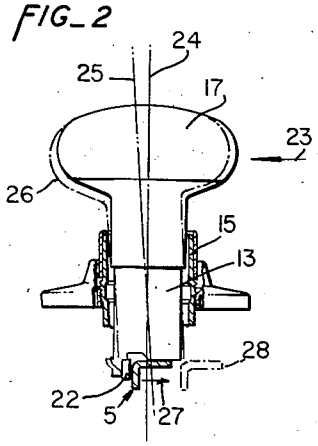

INVENTORS
ERNEST L. SCHLAGE
JOHN A. TORNOE
ARMIN H. GREEN

BY
Boyken, Mohler & Wood
ATTORNEYS

May 13, 1958 E. L. SCHLAGE ET AL 2,834,194

LOCK SPINDLE CONSTRUCTION

Filed Aug. 6, 1956 3 Sheets-Sheet 2

FIG_3

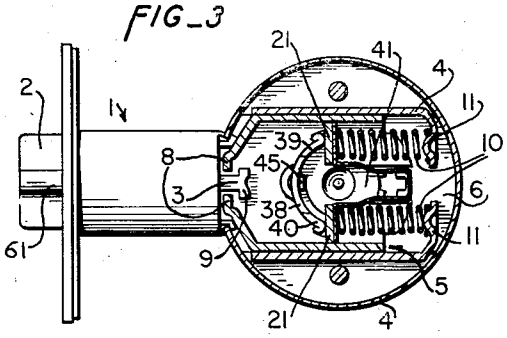

FIG_4

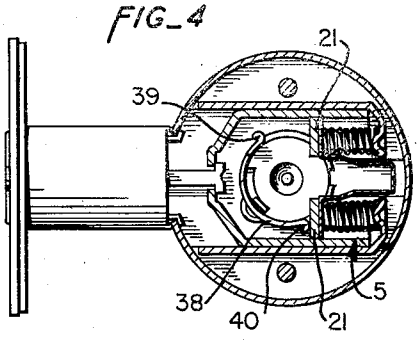

FIG_5

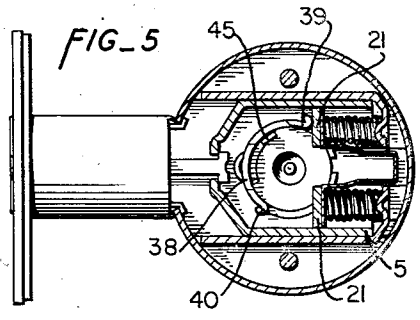

FIG_6

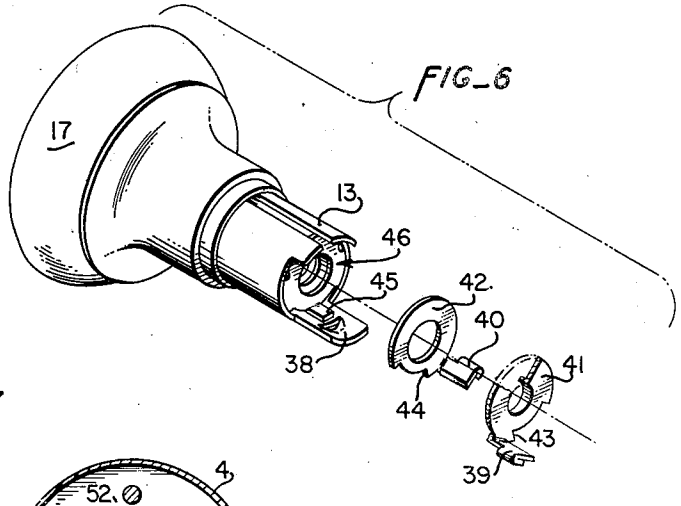

FIG_7

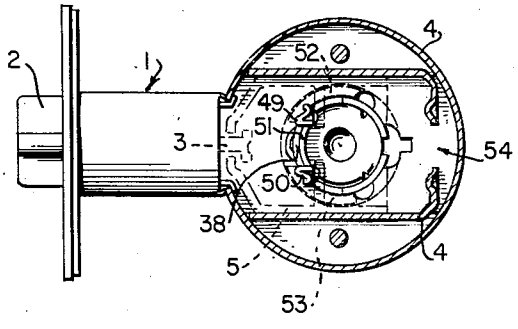

INVENTORS
ERNEST L. SCHLAGE
JOHN A. TORNOE
ARMIN H. GREEN

BY

Bayless, Mahler & Wood

ATTORNEYS

May 13, 1958 E. L. SCHLAGE ET AL 2,834,194

LOCK SPINDLE CONSTRUCTION

Filed Aug. 6, 1956

3 Sheets-Sheet 3

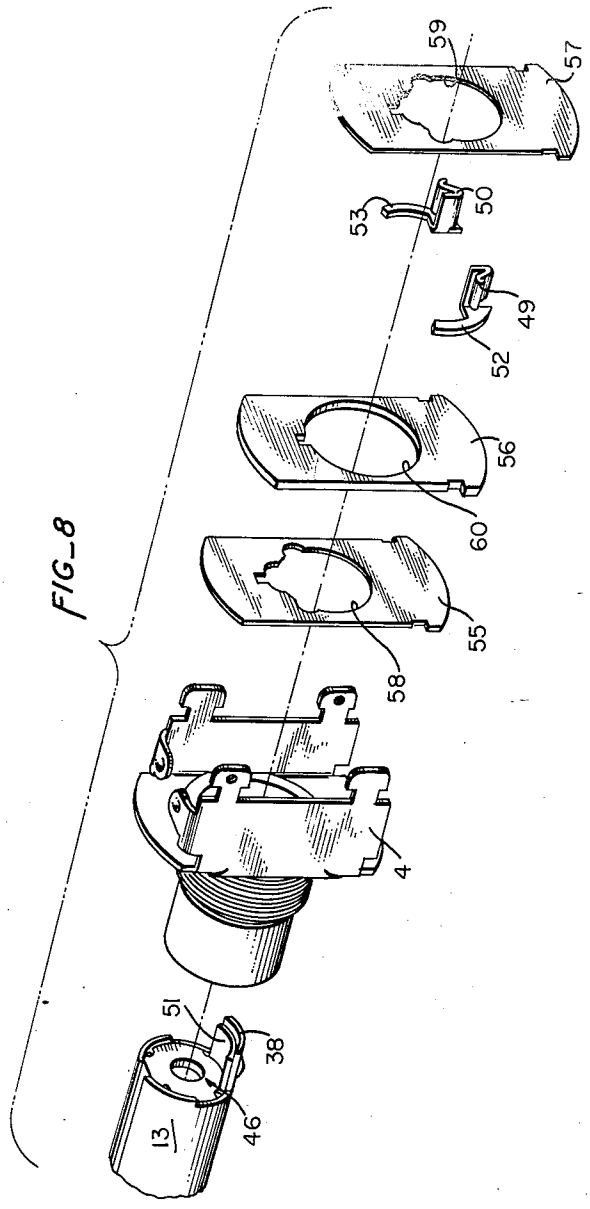

FIG_8

INVENTORS
ERNEST L. SCHLAGE
JOHN A. TORNOE
ARMIN H. GREEN

BY
Boyken, Mohler & Wood
ATTORNEYS

United States Patent Office 2,834,194 Patented May 13, 1958

2,834,194

LOCK SPINDLE CONSTRUCTION

Ernest L. Schlage, Burlingame, John Axel Tornoe, Redwood City, and Armin H. Green, San Mateo, Calif., assignors to Schlage Lock Company, a corporation

Application August 6, 1956, Serial No. 602,253

4 Claims. (Cl. 70—146)

This invention relates to door locks and more particularly to the construction of the outer knob spindle and its connection to the retractor which retracts the latch bolt.

In the type of door lock here illustrated there is an inner and an outer independently operable knob spindle, and in the conventional case each spindle carries a rollback member which engages a retractor. When either spindle is rotated in either direction its rollback member imparts movement to the retractor, and as the retractor is connected to the latch bolt the latter moves in unison and is retracted with relation to the strike plate in the door frame. A pair of compression springs oppose retracting movement of the retractor and these springs serve two functions, first, that of returning the retractor to the outer or projected position of the latch bolt, and second, that of returning the spindles and rollbacks to a normal, centered position. These springs then maintain the retractor in engagement with the rollback members on the knob spindles in order to accomplish the above two functions.

In locks of this type it is also customary to provide a means for locking the outside knob spindle against rotation so as to prevent operating the latch from the outside. In some cases this is done by providing a manually actuatable dog that dogs the outside knob spindle to the lock housing, and which dog is held in dogged position by a latch engaging the retractor. In such a case retraction of the retractor in an amount in the order of ⅛" releases the latch and the dog is spring urged to an inoperative position releasing the outer knob spindle.

It has been found that in the case of the conventional lock described, retraction of the retractor may be accomplished by an unauthorized person from the exterior side of the door, even though the outer knob spindle is dogged in locked condition, by imparting a sharp blow to the outer knob in the direction of projection of the latch. Since the knob spindles are supported in bearings there is always a slight clearance or play in the bearings, particularly after some wear has taken place. This clearance permits the outer spindle to momentarily assume a slight angle with relation to its normal axis of rotation when a sharp blow is imparted to the outer knob. Such blow will cause movement of the rollback member at the inner end of the outer knob spindle which is thereby transmitted to the retractor with which it is in engagement. Although the movement of the roll back member caused by the blow may be only 1/64" or less, it is sufficient to transmit a shock wave to the retractor of such force as to cause the latter to move toward its inner or retracted position sufficient to release the latch holding the dog in locking relation with the outer spindle and thereby permitting opening of the door by rotation of the outer knob.

In some cases it has been found that sufficient force can be transmitted to the retractor through the outer rollback members by means of a sharp blow on the outer

knob spindle to cause the retractor to be fully retracted and thereby to retract the latch bolt clear of the strike plate. In this event it is obvious that the door may be opened even though the outer knob spindle may remain locked with respect to the housing.

It is an object of this invention to provide means for preventing the transmission of the force of a sharp blow on the outer knob spindle of the lock of the class described to the retractor.

Another object of this invention is the provision of means in a door lock for isolating the outer knob spindle from the retractor against transmission of forces except by rotation of said outer knob spindle.

Other objects and advantages will become apparent from the following description taken in connection with the accompanying drawings, in which:

Fig. 1 is a horizontal longitudinal section of a door lock constructed in accordance with the preferred form of this invention, and showing the main parts of the mechanism;

Fig. 2 is a semi-diagrammatic view showing how a blow imparted to a conventional lock knob may be imparted to the retractor;

Fig. 3 is a cross-sectional view on a reduced scale taken generally along line 3—3 of Fig. 1;

Fig. 4 is a cross-sectional view similar to Fig. 3, but showing the lock mechanism being operated by the outer knob;

Fig. 5 is a sectional view similar to Fig. 3, but showing the lock mechanism being operated by the key and lock cylinder;

Fig. 6 is an exploded perspective view of the outer knob spindle and the rollback elements of the device of Fig. 1;

Fig. 7 is a cross-sectional view similar to Fig. 3, but showing a modified form of the improved spindle and rollback construction of this invention; and,

Fig. 8 is an exploded perspective view of the main parts of the modified form of Fig. 7.

In detail, referring to Fig. 1, the spindle construction of this invention is illustrated in combination with a door lock of the cylindrical type. Such a door lock conventionally comprises a latch unit, generally designated **1**, having a latch bolt **2** movable between a projected position (as shown in Fig. 1) and a retracted position. Latch bolt **2** is normally provided with a spring (not shown) for urging it to the projected position and a latch bar **3** which extends rearwardly into a cylindrical lock housing **4**. A retractor, generally designated **5**, is slidably mounted between a pair of thrust plates **6**, **7** (Fig. 1) in housing **4** and has a pair of jaws **8** engageable with a lug **9** (Figs. 1, 3) on latch bar **3**. Retractor **5** is slidable between an outer position in which the latch bolt **2** is projected to an inner position in which said retractor withdraws bolt to the retracted position. A pair of helical compression springs **10** act to urge retractor **5** to said outer position. It will be noted that housing **4** is made in two parts, and that the inner part is provided with spring retainers **11** (Figs. 1, 3) against which one of the ends of spring **10** abut.

The lock of Fig. 1 is also provided with inner and outer knob spindles **12**, **13**, respectively. Said knob spindles are tubular in shape and are supported in bearings **14**, **15** for independent rotation about a common axis extending through retractor **5**. Spindles **12**, **13** are rotated in the usual manner by means of knobs **16**, **17** secured to the outer ends thereof. It is also conventional to provide an escutcheon plate **18**, **19** surrounding each bearing **14**, **15** and adapted to be in engagement with opposed faces of the door in which the lock is mounted for covering the hole bored to receive lock housing **4**.

A portion of inner knob spindle **12** extends into lock housing **4** and is formed with a rollback member **20** which is in engagement with an intermediate thrust member **21** formed integrally with retractor **5** (Figs. 1, 3–5). By this means rotation of inner knob **16** in either direction imparts retracting movement to retractor **5** in the usual manner to slide said retractor to its inner position against the force of springs **10**. It will be seen that once inner knob **16** is released from its rotated position springs **10** urge retractor **5** to its outer position and at the same time thrust member **21** rotates spindle **12** through rollback member **20** back to its normal, centered position. Since springs **10** urge retractor **5** toward its outer position at all times, thrust member **21** is at all times in engagement with rollback member **20** and therefore spindle **12** is always centered at rest.

In previous lock construction it has been the practice to form the outside knob spindle **13** with a similar rollback member **22** (Fig. 2). This rollback **22** has similarly been held in engagement with retractor **5** at all times for the purposes of centering outside knob **17**, as previously described with respect to inner knob **16**. This prior construction has, however, resulted in a serious deficiency in the lock structure. It has been found, for instance, that a certain amount of clearance or play must be maintained between knob spindle **13** and its associated bearing **15** in order that knob **17** may be easily operated. This clearance may, of course, be increased due to wear between the spindle and bearing. In tests performed on the conventional structure indicated in Fig. 2 it has been noted that a blow imparted to outer knob **17** in the direction of **23** causes knob spindle **13** to be tilted from its normal axis of rotation at **24** to the position represented by dot-dash line **26** and a slightly angularly disposed axis **25** (Fig. 2). This tilting of knob **17** and spindle **13** causes the conventional outer rollback member **22** to drive retractor **5** in the direction of arrow **27** toward its inner position. Even though the tilting of knob **17** by a sharp blow results in only a slight movement of the rollback **22** the magnitude of the shock wave transmitted thereby to retractor **5** may be such as to drive said retractor far enough toward its inner position (dot-dash line **28**) to retract latch bolt **2** clear of the strike plate in the door frame. In such an instance it is seen that with the conventional structure of Fig. 2 the door may be opened by an unauthorized person, even though knob **17** may be locked against rotation, by imparting a sharp blow to said knob.

Furthermore, it is not uncommon practice to provide means for locking the outside knob against rotation such as is illustrated in Fig. 1. Such locking mechanism may comprise a dog **31** which is adapted to enter a slot **32** formed in the outer spindle **13**. Dog **31** is formed at the inner end of a bar **33** which extends longitudinally through the inner spindle **12** and is provided with a pushbutton **34** on its outer end operable from the exterior of knob **16**. Intermediate its ends bar **33** is provided with a latch **35** adjacent a slide plate **36** of the retractor **5**. The bar **19** is normally maintained in the position shown in Fig. 1, with pushbutton **34** extending outwardly of inner knob **16**, by means of a spring **29**. However, if the button **34** is depressed, dog **31** enters a slot **37** formed in the housing **4** as well as slot **32** in outer spindle **13**, and the dog will be retained in this position as latch **35** engages and is held by the inner face of sideplate **36**. When dog **31** is held by latch **35** in this inner position, it prevents rotation of outer spindle **13** by dogging together slots **32** and **37** formed in said outer spindle and the stationary housing **4**, respectively.

It will be noted, however, that bar **33** and dog **31** may be returned to the inoperative position shown in Fig. 1 by spring **29** upon retracting retractor **5** sufficiently to disengage plate **36** from latch **35**. This amount of retraction of refractor **5** need only be of the order of 1/8" which, it has been found, can be easily transmitted by rapping the outer knob **17** of the construction shown in Fig. 2. It is because of these difficulties with conventional construction that the device of this invention is provided.

In the preferred form of Figs. 1, 3, 4, 5, and 6, outer knob spindle **13** is provided with an integral lug **38** extending axially into lock housing **4** to a position spaced from the thrust member **21** of retractor **5**. A pair of separate rollback elements **39, 40** (Figs. 1, 3) are interposed between opposite sides of lug **38** and thrust member **21**. In effect, lug **38** and elements **39, 40** appear similar to a single rollback member, such as **22**, since said elements are held in engagement with thrust member **21** of retractor **5** by spring **10**.

Elements **39, 40** (Fig. 6) are formed as ears extending axially from a pair of circular, centrally apertured discs **41, 42**, respectively, which are mounted in the inner end of knob spindle **13** for independent rotation about the axis of said outer knob spindle. Discs **41, 42** are also provided with radially extending shoulders **43, 44** respectively (Fig. 6) engageable by a lug **45** (Figs. 1, 3, 6) projecting axially into the lock housing from the lock cylinder mechanism, generally designated **46** (Fig. 1). As in a conventional lock, lug **45** may be rotated independently of outer knob spindle **13** by means of the correct key in the lock cylinder. It will be noted that discs **41, 42** are supported between the inner end of the lock cylinder mechanism and one of the sides of retractor **5**.

Since neither the outer spindle lug **38** nor the lock cylinder lug **45** engages the retractor **5** a sharp blow administered to the outer knob of the lock of this invention will not be transmitted to said retractor as described with reference to Fig. 2.

The structure of this invention therefore overcomes the disadvantages of conventional construction in this regard by isolating the retractor from this type of movement of the outer knob spindle. It will be noted, however, that rotational movement of outer knob spindle **13** is transmitted by the edges of lug **38** to either roll back element **39, 40** (depending upon which way the outer spindle is turned) for retracting the latch in the normal manner. Fig. 4 shows such normal retraction taking place by rotation of an unlocked outer knob spindle **13** in the direction of roll back element **40**.

Fig. 5 illustrates retraction of the latch bolt **2** by turning a key in the lock cylinder mechanism **46**. Rotation of such mechanism causes lug **45** to engage either shoulder **43** or **44** (depending upon the direction of rotation of the lock cylinder) to thereby rotate the corresponding disc and its associated rollback element. It is seen in Fig. 5 that rotation of lug **45** causing rollback element **39** to urge retractor **5** to its inner position does not disturb the position of the lug **38** on outer spindle **13**.

The opposite sides of lug **38** and rollback elements **39, 40** are formed so that they are in engagement in planes substantially parallel to the line of action of retractor **5**. As a consequence any tilting of outer spindle **13**, as previously described, may slightly separate lug **38** from roll back elements **39, 40** in the direction of the said line of action, but such tilting movement cannot be transmitted to retractor **5**. In effect, rollback elements **39, 40** and lug **38** are formed to provide means for transmitting rotational motion only of outer spindle **13** to retractor **5**.

It should be noted that the above-mentioned planes of engagement may be slantingly disposed so as to converge in the direction of the latch unit **1**, but that said planes may not diverge in such direction and still be effective in not transmitting the movement occasioned by rapping the outside knob to the retractor.

The modification of Figs. 7, 8 primarily comprises a different mounting means for a pair of similar rollback elements **49, 50**. Elements **49, 50** are interposed between lug **38** on outer spindle **13** and the thrust member of retractor **5**, as in the preferred form. The surfaces

of elements 49, 50 that are in engagement with lug 38 are also in engagement with a similar lug 51 (Figs. 7, 8) on the lock cylinder mechanism 46. These surfaces of elements 49, 50 are, as in the previous case, lying in planes substantially parallel to the line of action of retractor 5 so that any tilting movement of outer knob spindle 13, as by a sharp blow administered to knob 17, is not transmitted through said elements to retractor 5. Likewise, lugs 38 and 51 are spaced from retractor 5 so that no such movement can be imparted directly to retractor 5 through said lugs.

Rollback elements 49, 50 are formed at right angles to a pair of arcuate bearing plates 52, 53, respectively. In place of the solid thrust plate 6 of the previously described form of the invention, a composite thrust plate, generally designated 54 (Fig. 7), is made up of three individual plates 55, 56, 57 (Fig. 8). Plates 55, 57 are centrally apertured as at 58, 59 for passing the inner end of outside knob spindle 13, as in a conventional case, and central plate 56 is provided with a circular opening 60 of greater diameter than apertures 58, 59. The bearing plates 52, 53 of the rollback elements 49, 50 are of substantially the same thickness as plate 56 and are adapted to be received within opening 60 and between plates 55, 57 when the three thrust plates are superimposed one over the other. In this manner elements 49, 50 are mounted for rotation about the axis of outside knob spindle 13 in tracks provided by the space between said outer knob spindle and the confines of opening 60 and bounded by plates 55, 57.

As previously explained, tilting knob spindle 13 from its longitudinal axis will not transmit force from lugs 38 or 51 to retractor 5. However, rotation of either of said lugs by authorized means causes one of said rollback elements 49, 50 (depending upon the direction of rotation of said lugs) to rotate in its track and thereby urge retractor 5 toward the inner or retracted position.

This modified form is then similar in operation to the preferred form in that only rotational movement of outer spindle 13 or lock mechanism 46 is transmitted to the retractor 5 through rollback elements 49, 50.

It will be noted in Fig. 3 that the lug 9 on the inner end of latch bar 3 is spaced from the jaws 8 of retractor 5. This feature is provided in a lock of the type having a dead locking plunger 61 (Figs. 1, 3) incorporated in the latch unit 1. This plunger 61 is depressed by the strike plate on the door frame and dogs the latch bolt against unauthorized retraction by means of a thin card or blade being inserted between the door and frame to cam the latch bolt back. Means (not shown) are usually provided, however, within the latch unit 1 for undogging the latch bolt by a slight authorized retraction of latch bar 3 through retractor 5.

In the case of the conventional lock shown in Fig. 2 in which the outside rollback 22 is in engagement with the retractor, it has been found possible to retract retractor 5 a sufficient distance to perform the undogging operation by applying a pressure to the outside knob in the direction of arrow 23 (Fig. 2). The provision of the spacing between jaws 8 and lug 9, however, prevents this result because initial retraction of the retractor does not then retract latch bar 3. The conventional lock is therefore safeguarded against this type of unauthorized entry by the spacing between the latch bar lug and the retractor jaws as shown in Fig. 3.

Although the invention has been described and illustrated in detail, it is obvious that further modifications that may occur to one skilled in the art are within the spirit and scope of the invention.

We claim:

1. In a door lock having a bolt retractor slidably supported for movement from an outer position in which the bolt is projected to an inner position in which the bolt is retracted, spring means urging said retractor to said outer position, and inside and outside knob spindles supported for rotation about an axis independently of each other, and wherein said inside knob is provided with a roll back in engagement with said retractor for sliding said retractor toward said inner position upon rotation of said inner spindle, the improvement comprising: a lug on said outside spindle extending axially thereof into spaced relation with said retractor, and a pair of separate rollback elements supported for rotation about the axis of said spindle interposed between opposite sides of said lug and said retractor, said elements being in engagement with said lug only in planes substantially parallel to the line of movement of said retractor, whereby movement of said lug toward said retractor does not impart movement to said elements.

2. In a door lock having a bolt retractor slidably supported for movement from an outer position in which the bolt is projected to an inner position in which the bolt is retracted, spring means urging said retractor to said outer position, and inside and outside knob spindles supported for rotation about an axis independently of each other, and wherein said inside knob is provided with a roll back in engagement with said retractor for sliding said retractor toward said inner position upon rotation of said inner spindle, the improvement comprising: a lug on said outside spindle extending axially thereof into spaced relation with said retractor, a pair of separate rollback elements interposed between opposite sides of said lug and said retractor, said elements being in engagement with said retractor and being in engagement with said lug only in planes substantially parallel to the line of movement of said retractor, and means supporting said elements for rotation about said axis, said supporting means including a pair of overlying discs each rigid with one of said elements and mounted for rotation about the axis of said outside knob spindle adjacent the side of said retractor.

3. In a door lock having a bolt retractor slidably supported for movement from an outer position in which the bolt is projected to an inner position in which the bolt is retracted, spring means urging said retractor to said outer position, and inside and outside knob spindles supported for rotation about an axis independently of each other, and wherein said inside knob is provided with a rollback in engagement with said retractor for sliding said retractor toward said inner position upon rotation of said inner spindle, the improvement comprising: a lug on said outside spindle extending axially thereof into spaced relation with said retractor, a pair of separate rollback elements interposed between opposite sides of said lug and said retractor, said elements being in engagement with said retractor and being in engagement with said lug only in planes substantially parallel to the line of movement of said retractor, and means supporting said elements for rotation about said axis, said supporting means including a pair of arcuately formed plates each rigid with one of said elements, and circular tracks receiving said plates and formed concentric with said axis between the inner end of said outside knob spindle and said retractor.

4. In a door lock having a bolt retractor slidably supported for movement from an outer position in which the bolt is projected to an inner position in which the bolt is retracted, spring means urging said retractor to said outer position, inside and outside knob spindles supported for rotation about an axis independently of each other, and a lock mechanism housed in said outside spindle and independently rotatable, and wherein said inside knob spindle is provided with a rollback in engagement with said retractor for sliding said retractor toward said inner position upon rotation of said inner spindle, the improvement comprising: a pair of lugs one on said outside spindle and one on said lock mechanism, respectively, extending axially

thereof into spaced relation with said retractor, and a pair of separate rollback elements interposed between opposite sides of said lugs and said retractor, said lugs and said elements being formed at their points of engagement such that moving said lugs toward said inner position of said retractor separates said lugs from said elements.

References Cited in the file of this patent

UNITED STATES PATENTS

1,691,528	Schlage	Nov. 13, 1928
2,297,077	Schlage	Sept. 29, 1942
2,618,955	Cerf	Nov. 25, 1952