Office de la Propriété Intellectuelle du Canada
Un organisme d'Industrie Canada

Canadian Intellectual Property Office
An agency of Industry Canada

CA 2434373 C 2006/07/11

(11)(21) 2 434 373

(12) BREVET CANADIEN
CANADIAN PATENT

(13) C

(22) Date de dépôt/Filing Date: 1996/01/25

(41) Mise à la disp. pub./Open to Public Insp.: 1996/08/01

(45) Date de délivrance/Issue Date: 2006/07/11

(62) Demande originale/Original Application: 2 211 127

(30) Priorité/Priority: 1995/01/25 (US08/377,846)

(51) Cl.Int./Int.Cl. *A63B 22/04* (2006.01)

(72) Inventeur/Inventor:
RODGERS, ROBERT E., JR., US

(73) Propriétaire/Owner:
RODGERS, ROBERT E., JR., US

(74) Agent: GOWLING LAFLEUR HENDERSON LLP

(54) Titre : EXERCISEUR FIXE
(54) Title: STATIONARY EXERCISE APPARATUS

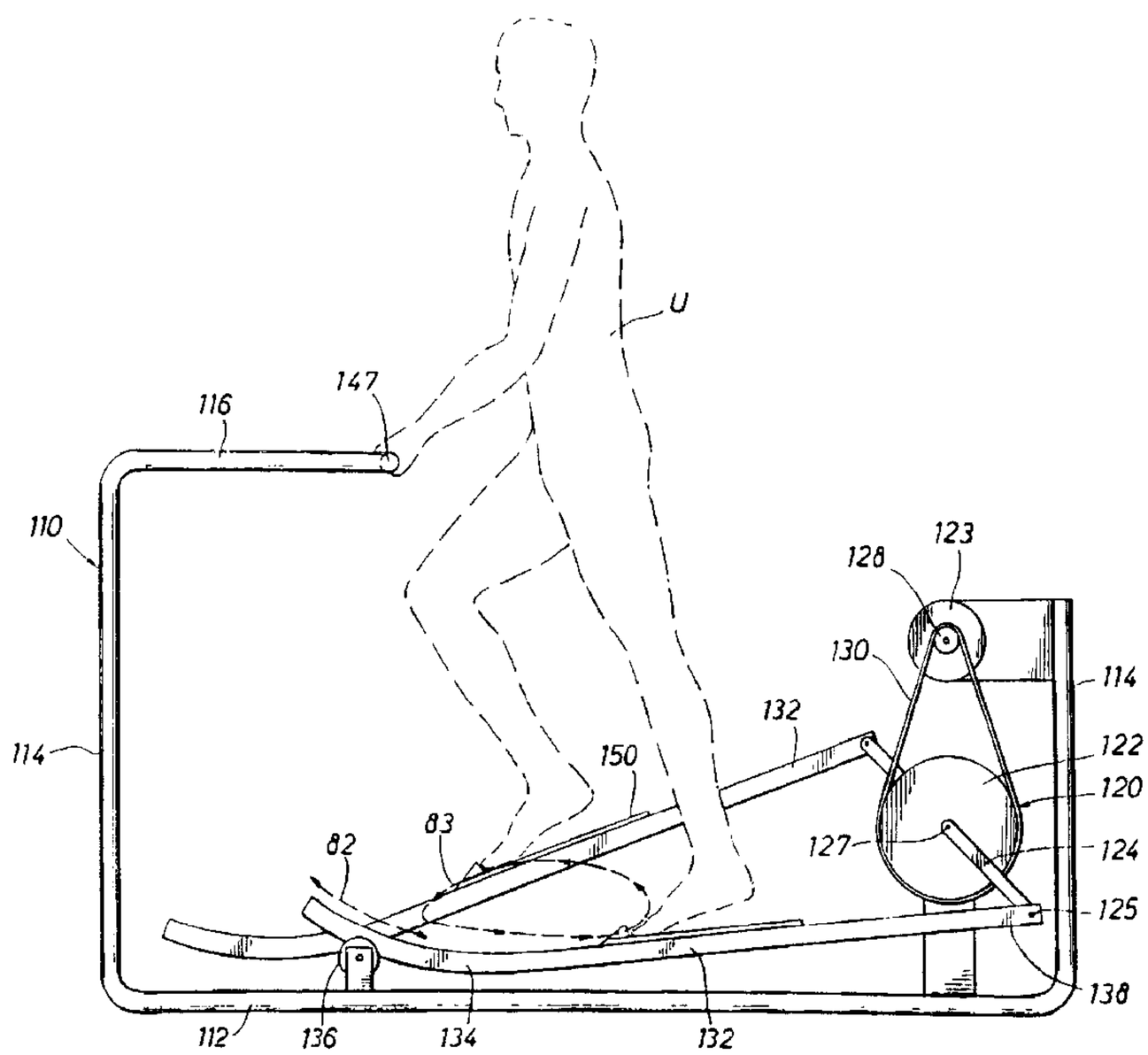

(57) Abrégé/Abstract:
A stationary exercising device which promotes cardiovascular exercise yet minimizes impact to critical joints. A base frame supports a pair of reciprocating members which are displaced in a horizontal direction parallel with the floor at one end yet reciprocate in a circular motion at the other end through a coupling system attached to the frame. Structure is included which permits each foot of the user to move in a generally elliptical path during the climbing exercise. This provides for more natural movement of the knee and ankle joints minimizing unnecessary stress on the joints yet permitting a cardiovascular workout. The device may include linkage to facilitate a corresponding upper body exercise involving movement of the arm in which case each hand of the user is displaced along an arc or a substantially elliptical path, again promoting a more natural movement of the ankle, knee, elbow and shoulder joints and permitting a cardiovascular workout.

ABSTRACT

A stationary exercising device which promotes cardiovascular exercise yet minimizes impact to critical joints. A base frame supports a pair of reciprocating members which are displaced in a horizontal direction parallel with the floor at one end yet reciprocate in a circular motion at the other end through a coupling system attached to the frame. Structure is included which permits each foot of the user to move in a generally elliptical path during the climbing exercise. This provides for more natural movement of the knee and ankle joints minimizing unnecessary stress on the joints yet permitting a cardiovascular workout. The device may include linkage to facilitate a corresponding upper body exercise involving movement of the arm in which case each hand of the user is displaced along an arc or a substantially elliptical path, again promoting a more natural movement of the ankle, knee, elbow and shoulder joints and permitting a cardiovascular workout.

STATIONARY EXERCISE APPARATUS

Background of the Invention

1. Field of the Invention

The present invention relates to an improved stationary exercising apparatus. More particularly, the invention relates to improved exercising apparatus which enables a user to move his feet in a predetermined closed path, for example, an elliptical path, which more accurately represents the body motion associated with climbing stairs or an inclined ramp, and also relates to a crank assembly for an exercising device which enables the user to move his feet and/or arms in a predetermined closed path. The invention further relates to an improved exercising apparatus which enables the user to move his feet in an elliptical path while foot platforms remain substantially parallel with a reference plane through at least a portion of the lower half of an elliptical path.

2. Description of the Prior Art

Stair climbing is a popular form of exercise for the cardiovascular system. However, it can over prolonged use overstress the knees. Walking is also a popular form of exercise but it does not load the cardiovascular system to the extent stair climbing does. Therefore, the need exists for an improved stationary exercising device which will load the cardiovascular system as stair climbing does but does not overload or unduly stress the knees and other joints. Prior art stair climbing devices have two common draw backs. First, they require excessive lifting of the knees or an exaggerated vertical movement of the lower legs. See, for example, U.S. Patent Nos. 3,316,898; 4,949,993; 4,989,857; and 5,135,477. Alternatively, the devices which do tend to promote a more natural movement of the knees and ankles are difficult to ascend and descend because of the configuration of the devices. See, for example, U.S. Patent No. 5,242,343. Additionally, while certain prior art devices have attempted to imitate a more natural movement of the knees or ankles,

they have failed to provide an accurate simulation. See, for example, U.S. Patent Nos. 5,242,343 and 5,383,829.

Hence, the need exists for an improved stationary exercise device which promotes the movements of the feet, ankles and legs in a more natural and rhythmic motion. In addition, the need exists for a more rhythmic movement of the hand motions in combination with a stair climbing exercise to accelerate a cardiovascular workout and exercise the upper body muscle groups without unduly overstressing the elbows and shoulders. Thus, the need exists for an improved stationary exercise device which can combine the movements of the feet and hands in a more natural and rhythmic motion.

Summary of the Invention

Briefly, the invention relates to an improved stationary exercising device. A frame is provided which includes a base portion adapted to be supported by the floor, a mid portion and a top portion. A coupling member is attached to the frame which includes a pulley defining a pivot axis. Two reciprocating members are positioned in spaced relationship to the base portion of the frame. One end of each reciprocating member is adapted for linear movement substantially parallel with the floor. That end of each of the reciprocating members being linearly displaced may contact the base portion or it may slide directly on the floor. The other end of each reciprocating member is attached, directly or indirectly, to the pulley of the coupling member. In this manner, rotation of the pulley rotates one end of each reciprocating member in an orbital motion while the other end of each reciprocating member moves in a linear manner. Means are also included for orienting the bottom of each foot of the user so that each foot follows a closed path, preferably a substantially elliptical path, during the operation of the apparatus.

Such means for orienting the bottom of the foot may include a linkage assembly for each reciprocating member. Each such linkage assembly comprises at least one link which is pivotally connected proximal one end between the two ends of the reciprocating member,

closest to the end that is being displaced along the floor. This additional linkage is restrained at its other end within the base portion of the frame permitting the second end of the link only to move substantially parallel with the floor or base as is the case for the first end of each reciprocating member.

The means for orienting the bottom of each foot of the user of the apparatus preferably allow the foot platform which supports each foot to follow a substantially elliptical path while a reference plane for each foot platform, such as the foot contact surface, remains substantially parallel to the floor as that foot platform advances initially rearwardly from the forward end of the elliptical path along at least a portion of the lower half of the elliptical path. This serves to provide preferred anatomical movement of the ankles and feet. Additionally, the dimensions of the orienting means may be selected so that the reference plane for each foot platform remains substantially parallel with the floor as that foot platform advances along at least a portion of the lower half of the substantially elliptical path.

In the preferred embodiment, each linkage assembly includes a second link which is pivotally connected to the second end of the first link. The second link is then pivotally restrained to the top portion of the frame proximate its other end. This second link also provides for hand movement.

In another embodiment, each reciprocating member includes a forward camming portion and is supported proximate the forward end by the base portion. Preferably, the camming portion is curved in shape. The other end of each reciprocating member is attached, directly or indirectly, to the pulley of the coupling member. In this manner, rotation of the pulley rotates one end of each reciprocating member in an orbital motion while the other end of each reciprocating member moves in a predetermined path defined by the camming portion. Means are also included for supporting or orienting the bottom of each foot of the user so

that each foot follows a predetermined closed path which may conform to a flattened circular path.

In an alternate preferred embodiment, one end of each reciprocating member is adapted for linear movement substantially parallel with the floor. That end of each of the reciprocating members being linearly displaced may contact the base portion or may slide directly on the floor. Means are also included for orienting the bottom of the feet of the user through two foot platforms or foot pads so that each foot platform follows a predetermined substantially elliptical path while the foot platforms remain substantially parallel to a reference plane, such as the floor, through their revolution about the ellipse.

The preferred crank assembly of the present invention includes at least two linkage assemblies, each having two individual links. Each link of a linkage assembly is pivotally connected at one end. The invention also includes two coupler systems, each coupler system having pulley means which rotate about a discrete pivot axis and means for connecting the pulley means to one end of one link of each linkage assembly. In this manner, each linkage assembly is connected to both couplers. Means are also included for correlating the rotational movement of each pulley means of both couplers.

According to one embodiment of the claimed invention an apparatus for exercising is provided. The apparatus comprises a frame having a base portion adapted to be supported by a floor; first and second reciprocating members, each reciprocating member having a rear support and a front end; a coupler supported by the frame defining a pivot axis and having crank members, each the crank member adapted to revolve about the pivot axis at one end and adapted to displace a reciprocating member from the other end of the crank member so that a portion of each reciprocating member proximate the rear support of each reciprocating member moves in a substantially reciprocating motion while the one end of each

crank member revolves about the pivot axis; first and second platforms for orienting the bottom of the feet of the user so that each foot of the user follows a substantially elliptical path during operation of the apparatus, each the platform positioned on a corresponding reciprocating member and inclined at an acute angle relative to a longitudinal axis of a corresponding reciprocating member to orient the user to face the pivot axis, each the platform having a heel end and a toe end; and first and second arm linkage assemblies, each the arm linkage assembly pivotally connected at one end to a reciprocating member and pivotally connected proximal the other end of the arm linkage assembly to the frame, wherein the toe end of each platform is level with or is higher than the heel end of the same corresponding platform at the upper most point of the elliptical path and the heel end of each platform is level with or higher than the toe end of the same corresponding platform at the lower most point of the elliptical path, and wherein the heel end of each platform is above the toe end of the same corresponding platform during a portion of the rearward movement of each platform away from the pivot axis.

According to another aspect of the invention an apparatus for exercising is provided. The apparatus comprises a frame having a base portion adapted to be supported by a floor; first and second reciprocating members, each reciprocating member having a rear support and a front end; a coupler supported by the frame defining a pivot axis and having crank members, each the crank member adapted to revolve about the pivot axis at one end and to displace a reciprocating member from the other end of the crank member so that a portion of each reciprocating member proximate the rear support of each reciprocating member moves in a substantially reciprocating motion while the one end of each the crank member revolves about the pivot axis; first and second platforms for orienting the bottom of the feet of the user so that each foot of the user follows a substantially elliptical path during operation of the apparatus, each the platform positioned on a corresponding reciprocating member and inclined at an acute angle relative to an axis extending from the rear support of the corresponding reciprocating member to the front end of

the same corresponding reciprocating member to orient the user to face the pivot axis, each the platform having a heel end and a toe end; and first and second arm linkage assemblies, each the arm linkage assembly pivotally connected at one end to a reciprocating member and pivotally connected proximal the other end of the arm linkage assembly to the frame, wherein the toe end of each platform is level with or is higher than the heel end of the same corresponding platform at the upper most point of the elliptical path and the heel end of each platform is level with or higher than the toe end of the same corresponding platform at the lower most point of the elliptical path, and wherein during operation of the apparatus as each platform initially moves rearwardly away from the pivot axis the toe end of each platform falls at a faster rate than the heel end of the same corresponding platform.

The more important features of the present invention have been summarized rather broadly in order that the detailed description may be better understood. There are, of course, additional features of the invention which will be described hereafter and which will also form the subject of the claims appended hereto.

Brief Description of the Drawings

In order to more fully describe the drawings used in the detailed description of the present invention, a brief description of each drawing is provided.

Fig. 1 is an elevation view of the preferred embodiment of the present invention.

Fig. 2 is a plan view of the preferred embodiment of the present invention.

Fig. 3 is an elevation view of an alternate embodiment of the present invention.

Fig. 4 is an elevation view of another alternate embodiment of the present invention.

Fig. 5 is an elevation view of yet another alternate embodiment of the present invention.

Fig. 6 is an elevation view of yet a further alternate embodiment of the present invention.

Fig. 7 is an elevation view of another preferred embodiment of the present invention.

Fig. 8 is a plan view of the preferred embodiment of the present invention as shown in Fig. 7.

Fig. 9 is an elevation view of an alternate embodiment of the present invention.

Fig. 10 is an elevation view of another alternate embodiment of the present invention.

Fig. 11 is an elevation view of yet another alternate embodiment of the present invention.

Fig. 12 is an elevation view of yet a further alternate embodiment of the present invention.

Fig. 13 is a detailed view of a portion of the present invention as shown in Figs. 7 and 8.

Fig. 14 is another detailed view of a portion of the present invention as shown in Figs. 7 and 8.

Fig. 15 is yet another detailed view of a portion of one of the alternate embodiments of the present invention.

Fig. 16 is an elevation view of yet another preferred embodiment of the present invention.

Fig. 17 is a plan view of the preferred embodiment of the present invention shown in Fig. 16.

Fig. 18 is an elevation view of the preferred embodiment of the present invention shown in Figs. 16 and 17 and having arm members.

Fig. 19 is a detail view of a portion of the present invention shown in Figs. 16 and 17.

Fig. 20 is an elevation view of an alternate embodiment of the present invention.

Fig. 21 is an elevation view of the alternate embodiment of the present invention shown in Fig. 19 having arm members.

Fig. 22 is an elevation view of yet another alternate embodiment of the present invention.

Fig. 23 is an elevation view of a still further preferred embodiment of the present invention.

Fig. 24 is a plan view of the preferred embodiment of the present invention as shown in Fig. 23.

Figs. 25(a)-25(c) are sequential views of the geometric considerations of the present invention to provide for a two point control elliptical path.

Fig. 26 is an elevation view of the present invention showing the two point control elliptical path of the present invention.

Figs. 27(a)-27(d) are sequential views of the geometric considerations of the present invention to provide for a three point control elliptical path.

Fig. 28 is an elevation view of the present invention showing the three point control elliptical path of the present invention.

Detailed Description of Present Invention

Referring to Figs. 1 and 2, a frame 10 is shown comprising a base portion 12, a mid portion 14, and a top portion 16. Referring briefly to Fig. 2, the frame 10 comprises two bottom portions 12' and 12", two mid portions 14' and 14", and two top portions 16' and 16". In essence, the frame is comprised of two separate operatively interconnected frame elements separately designated with ' and ". Obviously, variations can be made to frame 10 as disclosed without departing from the spirit of the invention.

A coupling system 20 is fixed relative to the frame and comprises a pulley 22, crank members 24, resistant brake 23, sheave 28 and belt 30. Two reciprocating members 32 are positioned in the lower proximity of frame 10. Each reciprocating member 32 has one end 34 which is adapted to move laterally in a linear direction as shown in Fig. 1. A roller 36 is mounted at each end 34 of reciprocating member 32 and is adapted, as shown in Fig. 1, to ride on base portion 12 of frame 10. Alternatively, roller 36 may directly engage the floor, if desirable. The other end 38 of each reciprocating member 32 is pivotally connected to one end of a crank 24. The pivotal connection at end 38 may be through a pivotal connection member 25 (see Fig. 2) which extends between the other ends 38 of reciprocating members 32 and cranks 24. The other end of crank 24 is attached to pulley 22 at the pivot axis 26 of the coupling system 20. The pivot axis 26 is the axis about which pulley 22 rotates.

In the preferred embodiment, the present invention also includes two foot members, or contact members, 40. Each foot member 40 is pivotally attached proximate a first end 42 through a pinned connection 44 to the reciprocating arm 32. A foot pad 50 is attached to the top surface of each foot member 40 at its first end 42. Each foot member 40 is pivotally attached at its other end 46 to an arm member 48. Each arm member 48 is also pivotally attached proximal its other end to the top portion 16 of frame 10. A handle portion 47 (see Fig. 2) is included at the top end 49 of each hand member 48. Referring to Fig. 2, it can be easily seen that the frame 10 comprises dual base portions 12'/12", mid portions 14'/14" and top portions 16'/16". Furthermore, it can be seen that reciprocating members 32, foot members 40 and arm members 48 provide identical dual systems; each system resting on a base portion 12' or 12" of the frame and each arranged to accommodate one foot and one arm of the user.

In the operation of the preferred embodiment, and other embodiments described hereafter, the user "U" can ascend the present invention from the back or the sides which facilitate its use. In some prior art disclosures ascending and descending is difficult and cumbersome due

to the location of the pulleys and other structures. See, for example, U.S. Patent No. 5,242,343. However, in the case of the present invention it is easy to ascend and descend the device as there is a minimal amount of interference in the structure during exercise activity.

During operation, a climbing motion by the user results in the displacement of first ends 34 of each reciprocating member 32 in the direction of arrow 70. Similarly, an orbiting motion, which in the preferred embodiment is circular, occurs at the second end 38 of each reciprocating member 32. However at points between the opposite ends 34 and 38 of each reciprocating member 32, the motion gradually changes from an orbital motion (at ends 38) to a linear motion at the ends 34. This geometric transition occurs in the form of an approximate ellipse. It is not a perfect elliptical shape; and it tends to be slightly more eggshaped. However, it provides a more natural and rhythmic body movement.

It appears that the preferred location of pinned connection 44 relative to the length of the reciprocating member 32 is in that 1/3 portion closest to the first end 34 of each reciprocating member 32. It is in this range that the movement of each foot of the user follows an elliptical path (as shown by approximate ellipse 71) which is the more natural and comfortable geometric motion of the ankle and knee, minimizing stress on these joints yet permitting continued cardiovascular exercise. During operation, the upper end 49 of each arm member 48 moves in an arc as shown by arrow 72. Such permits hand/arm/shoulder movements for exercising the upper body muscle groups while continuing the cardiovascular exercise.

Resistant brake 23 of coupling system 20 operates in a manner well known to those skilled in the art. Resistant brake 23 serves to increase or decrease the load on the pulley through the sheave 28/belt 30 arrangement. Thus, resistant brake 23 serves to increase or decrease the extent of the cardiovascular workout.

Referring now to Fig. 3, an alternate embodiment of the present invention is shown. Identical two-digit reference numerals will be used to

designate similar structure found in the preferred embodiment but with an "a" series suffix. Frame 10a comprises a lower portion 12a, a mid portion 14a, and a top portion 16a. A coupling system 20a is included having identical components of the coupling system 20 described above for the preferred embodiment. Furthermore, coupling system 20a performs in an identical manner to coupling system 20 described above for the preferred embodiment.

A pair of reciprocating members 32a are also included, each having a first end 34a on which rollers 36a are mounted. The second end 38a of each reciprocating member 32a is pivotally connected via a pinned connection or pin member 25a to one end of each crank 24a. Again, two foot members 40a are included, each being pivotally connected proximate a first end 42a at pinned connection 44a to a corresponding reciprocating member 32a. Each foot member 40a also includes a foot pad 50a attached to the top surface of each foot member 40a at first end 42a. In this embodiment, however, a roller 45a is attached to each foot member 40a at its second end 46a. Each roller 45a engages a top bar 13a of frame 10a. Each top bar 13a is connected at one end to mid portion 14a of frame 10a and its other end to base portion 12a. In addition, the top portion 16a of each bend of frame 10a is connected by a bar 47a which is adapted to be held by the user during exercising to provide added stability.

In the operation of this alternate embodiment, the user ascends the device from the side or the rear with ease, places both feet on pads 50a, grabs bar 47a and begins a stair climbing motion. At that point, first ends 34a of each foot member 40a are placed in a linear manner in the direction of arrow 73, as in the case of the preferred embodiment. Similarly, as in the case of the preferred embodiment, ends 38a of each reciprocating member 32a move in an orbiting motion, preferably circular, about pulley 22a. Again, the change from a linear movement of first ends 34a of reciprocating members 32a and an orbiting movement of second end 38a of reciprocating member 32a is an approximate ellipse of varying shape. In this alternate embodiment, the second end 46a of each foot member 40a is

restrained also to move linearly in the direction of arrow 73. Each roller 45a is restrained from vertical movement by means of bar 13a. Thus, in this embodiment, the user does not employ an arm member as shown on the preferred embodiment. Rather, the user grabs the bar 47a for added stability.

Referring now to Fig. 4, another alternate embodiment of the present invention is shown. As before, similar parts will be designated by the same two-digit reference numeral as shown in the preferred embodiment but now with a "b" series suffix. Frame l0b again comprises a base portion 12b, a mid portion 14b and a top portion 16b. A coupler system 20b is also provided which is identical in structure and function to coupling system 20 of the preferred embodiment (Figs. 1-2). This alternate embodiment also includes a pair of reciprocating members 32b, each having a first end 34b which moves linearly in the direction of arrow 74 by means of rollers 36b. As in the case of the previous embodiments, rollers 36b are shown engaging bottom portion 12b of the frame; however, they may slide along the floor rather than the base of the frame. Similarly, each reciprocating member 32b includes a second end 38b pivotally attached to one end of a crank 24b. In this alternate embodiment two contact members 40b are included having a foot portion 50b angularly displaced from a longitudinal portion 51b. Each contact member 40b is pivotally connected at a first end 42b via pinned connection 44b to the reciprocating member 32b. This alternate embodiment also includes a sleeve 52b rotatably mounted to the top portion 16b of frame l0b. Each sleeve 52b serves to laterally restrain longitudinal member 51b of contact member 40b permitting only axial (or longitudinal) movement of member 51b relative to sleeve 52b and angular movement of member 51b relative to the top portion 16b of frame l0b.

In operation the user ascends the device from the side or the rear and begins the climbing motion using his feet engaging foot portions 50b. The upper portion of each longitudinal member 51b includes a handle

portion 47b which can be grabbed by the user. As in the case of the previous embodiments, the climbing motion results in a lateral or linear displacement of first ends 34b of each reciprocating member 32b in the direction of arrow 74. However, movement of the user's hands via handle portions 47b is not in an arc as described above with respect to the preferred embodiment or stationary as in the case of the first alternate embodiment. Rather, the path which the hands of the user takes in this alternate embodiment follows a generally elliptical path 75 as do the feet (see approximate elliptical path 76). Thus, this embodiment provides a more extensive cardiovascular exercise in that both upper and lower body motion occurs in a more natural and rhythmic pattern minimizing excessive stress on the ankle, knee, elbow, and shoulder joints.

Referring now to Figs. 5 and 6, two further embodiments are shown. As in the case of the previous embodiments, similar structure will be referred to with the same two-digit reference numeral but with a "c" or "d" series suffix. In the case of Fig. 5, the designated structure has a "c" series suffix and in the case of Fig. 6, the designated structure has a "d" series suffix.

Referring to Fig. 5, the frame 10c comprises a bottom portion 12c, a mid portion 14c and a top portion 16c. A coupler system 20c is shown which includes the same components and functions identically with the coupling system 20 of the preferred embodiment. Two reciprocating members 32c are included, each having a first end 34c to which a roller 36c is attached. The other end 38c of each reciprocating member 32c is pivotally connected to one end of a crank 24c of coupling system 20c. The upper portion 16c of frame 10c includes a bar 47c to be grabbed by the user for stability. A wedge or block 41c is attached to the top of each reciprocating member 32c proximate its first end 34c. Each block includes a foot pad 50c.

As in the case of previous embodiments, the user ascends the device from the side or rear and begins a stair climbing motion by alternately pressing downwardly on each foot pad 50c. In this manner the first end

34c of each reciprocating member 32c is linearly displaced in the direction of arrow 77 and end 38c of each reciprocating member 32c is moved in an orbital path about the pivot axis of 26c of coupling system 20c. As in the previous embodiments, such a configuration permits each foot of the user to follow an elliptical path generally shown by approximate ellipse 78.

Referring now to Fig. 6, an alternate embodiment of the version depicted in Fig. 5 is illustrated. Frame 10d comprises base porion 12d, mid portion 14d and top portion 16d. Once again, a coupling system 20d is shown identical to that in structure and function of coupling system 20d in Fig. 5. Moreover, reciprocating members 32d and wedge members 41d and their interrelationship to coupling system 20d are identical to that depicted by elements 32c, 41c and 20c, respectively, of Fig. 5.

As in the case of the previous embodiments, operation of the device shown in Fig. 6 results in linear movement of first ends 34d of reciprocating members 32d in the direction of arrow 79. The difference in this alternate embodiment, however, is a pair of linkage assemblies (one for each reciprocating member 32d) comprising a first link 53d and a second link 54d. One end of link 53d is attached to roller 36d of each reciprocating member 32d. First link 53d is pivotally connected at pinned connection 55d to second link 54d. Second link 54d is pivotally connected proximate its other end to the top portion 16d of frame 10d. The end of second link 54d distal said pinned connection 55d includes a handle portion (not shown) similar to handle portion 47 of Fig. 2. As in the case of the embodiment shown in Fig. 5, the user of the device shown in Fig. 6 easily ascends the device from the side or the rear, grabs the handle portion and begins to alternately exert downward pressure on the foot pad portions of each wedge or block 41d in a stair climbing motion. As in the previous embodiments, this results in a smooth substantially elliptical motion of each foot of the user as shown by approximate ellipse 80. It also results in the exercising of certain muscle groups in the upper body through rotation of the hands along the arc in the direction of arrow 81.

Referring now to the alternate preferred embodiment shown in Figs. 7 and 8, identical two-digit reference numerals are used to designate similar structure found in the preferred embodiment of Figs. 1 and 2, but with a 100 series prefix. A frame 110 is shown comprising a base portion 112, a mid portion 114, and a top portion 116. Referring briefly to Fig. 8, the frame 110 comprises two bottom portions 112' and 112" and two mid portions 114' and 114". In essence, the frame is comprised of two separate frame elements designated with ' and ". Obviously, variations can be made to frame 110 as disclosed without departing from the spirit of the invention.

A coupling system 120 is fixed relative to the frame and comprises a pulley 122 and crank members 124. A resistant brake system 123 is also shown which includes a sheave 128 and a belt 130. Two reciprocating members 132 are positioned in the lower proximity of frame 110. Each reciprocating member 132 has a camming portion 134 which is adapted to ride on a roller 136 attached to base 112. As shown the camming surface may be curved. The other end 138 of each reciprocating member 132 is pivotally connected to one end of a crank 124. The pivotal connection at end 138 may be through a pivotal connection member 125 (see Fig. 8) which extends between the other ends 138 of reciprocating members 132 and cranks 124. The other end of crank 124 is attached to pulley 122 at the pivot axis 126 of the coupling system 120. The pivot axis 126 is the axis about which pulley 122 rotates.

A foot pad 150 is attached to the top surface of each arm 132 to support and orient a foot of the user. The top portion 116 of frame 110 includes a handle portion 147 which the user grabs for stability during exercising.

Referring to Fig. 8, it can be easily seen that the frame 110 comprises dual base portions 112'/112", mid portions 114'/114" and top portions 116'/116". Furthermore, it can be seen that the reciprocating members 132 provide an identical dual system; each system resting on a base portion 112' or 112" of the system and each arranged to accommodate one foot and

one arm of the user. Each frame element (′ and ″) is connected by cross members, such as 135.

In the operation of the embodiment shown in Fig. 8, the user "U" ascends the present invention from the back or the sides which facilitate its use and begins a climbing motion which results in the displacement of each reciprocating member 132 in the direction of arrow 82 at the camming portion 134. Similarly, an orbiting motion, which in the described arrangement is circular, occurs at the second end 138 of each reciprocating member 132. However at points between the opposite ends of each reciprocating member 132, the motion gradually changes from a circular motion (at ends 138) to an arcuate motion at portions 134. This geometric transition results in a predetermined closed path which preferably is a flattened circle configuration 83 at foot pads 150. This provides a more natural and rhythmic movement for the feet, ankles and legs. In this manner the user can achieve the superior cardiovascular workout associated with a stair climber but without the awkward and unnatural movement of the feet, ankle, knees and legs associated with prior art devices.

Resistant brake system 123 operates in a manner well known to those skilled in the art. Resistant brake 123 serves to increase or decrease the load on the pulley through the sheave 128/belt 130 arrangement. Thus, resistant brake 123 serves to increase or decrease the extent of the cardiovascular workout.

Referring to Fig. 9, an embodiment is shown which is identical to the embodiment of Fig. 7 except that the frame includes a mid portion 114e which ascends proximate the center of the base portion 112e. In this orientation, the user "U" would face a direction opposite from that shown in Fig. 7. In this configuration, the roller 136e is repositioned closer to the coupling system 120e and the resulting circular path 84 assumes a flatter profile. The embodiment shown in Fig. 9 with the flatter profile 84 permits cardiovascular exercising with minimal stress on the joints due to the preferred anatomical pattern.

Referring now to Fig. 10, another alternate embodiment of the present invention is shown. For this embodiment, identical two-digit reference numerals are used to designate similar structure found in the preferred embodiments but with a 100 series prefix and a "f" series suffix. Frame 110f comprises a lower portion 112f, a mid portion 114f, and a top portion 116f. A coupling system 120f is included having identical components of the coupling system 20 described above for the preferred embodiment. Furthermore, coupling system 120f is included having identical components of the coupling system 20 described above for the preferred embodiment and performing in an identical manner to coupling systems 20 and 120 of the preferred embodiments.

A pair of reciprocating members 132f are also included, each having a first end 134f on which rollers 136f are mounted. The second end 138f of each reciprocating member 132f is pivotally connected via a pin member 125f to one end of each crank 124f. Two foot members 140f are included in this alternate embodiment, each being pivotally connected proximate a first end 142f at a pin connection 144f to a corresponding reciprocating member 132f. Each foot member 140f also includes a foot pad 150f attached to the top surface of each foot member 140f at first end 142f. In this embodiment, a roller 145f is attached to each foot member 140f at its second end 146f. Each roller 145f engages a bar 113f of each bend of frame 110f. Each bar 113f is connected at each end to frame 110f and includes a curved camming portion 115f. Thus, each bar 113f acts as a track to guide the second end 146f of each foot member 140f by means of a roller 145f. In addition, the top portion 116f of each bend of frame 110f includes a handle 147f adapted to be held by the user during exercising to provide stability.

In operation of this alternate embodiment, the user "U" ascends the device from the side or the rear with ease, places both feet on pads 150f, grabs bar 147f and begins a climbing motion. At that point, first ends 134f of each foot member 140f are displaced in a linear manner in the direction of arrow 85. Ends 138f of each reciprocating member 132f move in an orbital motion, which in the described arrangement is circular, about

pulley 122f. The change from a linear movement at first ends 134f of reciprocating members 132f to a circular movement of second end 138f of reciprocating member 132f coupled with the influence of an arcuate movement of ends 146f of foot members 140f results in a generally flattened circular motion as shown by path 86.

Referring now to Fig. 11, yet another alternate embodiment of the present invention is shown. As before, similar parts will be designated by the same two-digit reference numeral as shown in the preferred embodiment with a 100 series prefix, but now with a "g" suffix. Frame 110g comprises a base portion 112g, a mid portion 114g and a top portion 116g. A coupler system 120g is provided which is identical in structure and function to coupling system 120 of the preferred embodiment shown in Figs. 7-8. This alternate embodiment also includes a pair of reciprocating members 132g, each having a first end 134g which moves linearly in the direction of arrow 87 by means of rollers 136g. As in the case of the previous embodiments, rollers 136g are shown engaging bottom portion 112g of the frame; however, they may slide along the floor rather than the base of the frame. Similarly, each reciprocating member 132g includes a second end 138g pivotally attached to one end of a crank 124g. In this alternate embodiment two foot members 140g are included having a foot portion 150g. Each foot member 140g is pivotally connected at a pin connection 144g proximate a first end 142g of a foot member 140g to a corresponding reciprocating member 132g. Approximately 1/2 to 1/3 the length of each foot member 140g comprises a camming portion 115g, which may be curved as shown. A roller 145g, which is secured to base 112g by vertical member 113g, rides along the upper surface of the curved portion 115g of each foot member 140g during the operation of the present invention. Thus, each roller 145g serves to vertically restrain the curved portion 115g of each member 132g.

In the operation of this alternate embodiment, the user "U" ascends the device from the side or the rear grabs the handles 147g and begins a climbing motion. As the user begins the climbing motion, ends 134g of

each reciprocating member move in a linear motion in the direction of arrow 87 and ends 138g of each reciprocating member 132g move in an orbital motion, which in the disclosed arrangement is circular. In view of the shaped or curved portion 115g of each foot member 140g, the lateral displacement of ends 134g of each reciprocating member and the circular motion at ends 138g, a predetermined closed path is defined preferably a flattened circular profile 88 as shown.

Referring now to Fig. 12, yet another alternate embodiment of the present invention is shown. As before, similar parts will be designated by the same two digit reference numeral as shown in the previously described alternate preferred embodiment, with a 100 series prefix, and an "h" suffix. Frame 110h again comprises a base portion 112h, a mid portion 114h and a top portion 116h. A coupling system 120h is also provided which is identical in structure and function to the coupling system 120 of the alternate preferred embodiment (Figs. 7-8). This alternate embodiment also includes a pair of reciprocating members 132h, each having a first end 134h which moves along the base 112h in a generally linear direction on rollers 136h. In this alternate embodiment, a portion of the base 112h includes a curved profile 113h proximate that portion of the base in contact with rollers 136h of reciprocating members 132h. Each reciprocating member 132h includes a second end 138h pivotally attached to one end of a crank 124h. Again in this alternate embodiment, two foot members 140h are included having a foot portion 150h. Each foot member 140h is pivotally connected at a pin connection 144h proximate a first end 142h of a foot member 140h. The other end 145h of each foot member 140h is pivotally connected to an arm member 148h. One end 156h of arm member 148h is attached at the pivotal connection 146h while the arm member 148h is pivotally restrained proximate its other end at a pivotal connection 157h to the top portion 116h of frame 110h. Each arm is pivotally connected at connection 157h to the top portion 116h of frame

110h. A handle portion 147h is included at one end of each arm member 148h.

Thus, in the operation of the embodiment shown in Fig. 12, the user "U" ascends the apparatus and begins a climbing motion by alternately exerting pressure on pads 150h and by beginning an oscillating motion of handles 147h of arm members 148h in the direction of arrow 89. In this manner, the movement of the feet on foot pads 150h move in a predetermined closed path 90. The curved portion 113h of each bend of base portion 112h acts as a camming surface and influences the closed profile of closed path 90. That is, the curved portions 113h serve to flatten the lower portion of path 90 so that it more accurately resembles a walking motion. Concurrently, the user is oscillating handles 147h in the direction of arrow 89 thereby achieving an enhanced cardiovascular exercise. As a result, muscle groups of the upper body are exercised as a result of the oscillating motion of arm members 148h.

Figs. 13-15 are detailed views of portions of the preferred and alternate embodiments which illustrate the adjustable nature of certain elements. The adjustability of certain linkages will modify the geometric configuration of the closed path which is advantageous to accommodate different sized users or to create a particular configuration of closed path.

Referring to Fig. 13, each crank member 124/124f/124g/124h, respectively, may include a series of apertures 59 through which pivotal connection member 125/125f/125g/125h may pass. Thus, as an operator readjusts the end 138/138f/138g/138h of reciprocating member 132/132f/132g/132h in a radially outwardly direction toward the outward aperture 59, the generally flattened circular path 83/86/88/90 will assume a proportionally larger closed path, as shown by phantom lines 88' in Fig. 11.

Referring to Fig. 14, the first end 134/134f of each reciprocating member 132/132f is shown having a telescoping portion 132'/132f' with apertures 60. The other portion of each reciprocating member would

include an aperture 61 adapted to be aligned with a particular aperture 60 so that a pin connection 62 can be passed through, thereby extending or shortening each reciprocating member 132/132f. In this manner, the operator can alter the configuration of the path 86/88/90 of the alternate embodiments. If the overall length of each reciprocating member 132/132f/132g is extended by inserting a pin 62 in aperture 60 located closest to the coupling system 120 as shown in Fig. 11, the height of the closed path 88 is increased but the length is not affected, as shown by phantom line 88" in Fig. 11.

Referring now to Fig. 15, a detailed view is shown of a portion of the alternate embodiment depicted in Fig. 12. Specifically, top portion 116h also includes a second member 116h which telescopes therein. Member 116h includes a plurality of apertures 117h. Top portion 116h also includes a plurality of apertures 119h. In this manner, the user may adjust portion 116' within top portion 116h and fasten the two portions together by means of a pin member 121h which passes through aperture 119h and one of the selected apertures 117h. Thus, the length of top portion 116h, can be adjusted so that handles 147h are more easily reached by the user.

Referring now to the preferred embodiment of Figs. 16 and 17, it will be seen that identical two-digit reference numerals are used to designate similar structures to reference numerals utilized above, with the addition of a 200 series prefix. A frame 210 is shown comprising a base portion 212, a mid portion 214, and a top portion 216. Referring briefly to Fig. 17, the frame 210 comprises two bottom portions 212' and 212", two mid portions 214' and 214", and two top portions (not shown). In essence, the frame is comprised of two separate frame elements designated ' and ". Obviously, variations can be made to frame 210 as disclosed without departing from the spirit of the invention.

A coupling system 220 is fixed relative to the frame and comprises a pulley 222, crank members 224, resistant brake 223, sheave 228 and belt 230. Two reciprocating members 232 are positioned in the lower proximity of

frame 210. Each reciprocating member 232 has one end 234 which is adapted to move in a linear direction as shown in Fig. 16 by arrow 91. A roller 236 is mounted at each end 234 of reciprocating member 232 and is adapted, as shown in Fig. 16, to ride on base portion 212 of frame 210. Alternatively, roller 236 may directly engage the floor, if desirable. The other end 238 of each reciprocating member 232 is pivotally connected to one end of a crank 224. The pivotal connection at end 238 may be through a journal member 225 (see Fig. 17) which extends from the end of crank 224 through an aperture in end 238 of each reciprocating member 232 and attaches to one end of a link 242 of linkage assembly 240 as discussed below. The other end of crank 224 is attached to pulley 222 at pivot axis 226 of coupling system 220. Pulley 222 revolves about axis 226. The preferred embodiment may include a handle portion 247 which is an integral part of top portion 216 of frame 210.

The preferred embodiment of Fig. 16 includes duplicative linkage assemblies 240. Each linkage assembly 240 comprises two primary links 242 and 244. Link 242 is fixed at one end to journal member 225 and is pivotally connected at its other end 241 to link 244. Link 244 comprises two portions -- a bent portion 245 and a telescoping portion 246. One end of bent portion 245 reciprocates within telescoping portion 246. A foot platform or foot pad 250 is attached to telescoping portion 246 of link 244 proximate end 251 of link 244.

Referring to Fig. 18, the preferred embodiment shown in Fig. 16 is reproduced but includes arm members 248. Each arm member includes a handle portion 247 which is gripped by the user during the operation of the apparatus. The other end of each arm member 248 reciprocates within a sleeve 264. Sleeve 264 is pivotally attached to telescoping portion 246 through pivot point 265. Each arm member 248 is pivotally connected a pivot point 266 to the top portion 216 of frame 210. During operation of the apparatus, arm member 248 pivots about point 266 and thereby slides

vertically relative to sleeve 264 as link 244 revolves in accordance with the present invention as described below.

In the operation of the preferred embodiment shown in Figs. 16-18, the user "U" ascends the present invention from the back or the sides which facilitate its use. In some prior art disclosures, ascending and descending is difficult and cumbersome due to the location of the pulleys and of the structure. However, in the case of the present invention it is easy to ascend and descend as there is a minimal amount of interference in the structure during exercise activity.

During operation, a climbing motion by the user results in the displacement of first ends 234 of each reciprocating member 232 in the direction of arrow 91. Similarly, an orbital motion, which in the described arrangement is circular, occurs at the second end 238 of each reciprocating member 232 as shown in phantom by circle 92. At points between the ends 234 and 238 of each reciprocating member 232, the motion gradually changes from a circular motion (at ends 238) to a linear motion at ends 234. This geometric transition occurs in the form of an approximate ellipse. It is not a perfect elliptical shape; it tends to be slightly more eggshaped. However, it provides a more natural and rhythmic body movement.

Additionally, the circular movement of journal member 225 results in a similar circular motion of the outer end of links 242 since each crank 224 and link 242 are fixed relative to one another through journal member 225. This causes pivot connection 241 to rotate in a circle about axis 26 as shown in phantom as circle 93. Thus, two concurrently circular motions occur as shown by circles 93 and 92. Such dual circular motion translates to a substantially elliptical shape as shown by ellipse 94 at foot platforms 250 yet permits each foot platform 250 to remain substantially parallel with a reference plane, which in the case of Fig. 16 is shown as the floor "F" or base portion 212, during such elliptical movement of foot platform 250. Obviously, foot platform 250 may be initially oriented at an angle relative to a reference plane other than the floor by bending the end of portion 246

or including a wedge under each platform 250. In either event, the present invention still provides that the foot platforms 250 remains substantially parallel to a reference plane "R" as shown in Fig. 19.

Referring to Fig. 18, while the user displaces the foot platforms in a substantially elliptical shape, the arms are used to oscillate handle portions 247 in an arcuate path as shown by arrow 95. The arc of arrow 95 is defined by the radius of a circle extending from pivot point 265 to handle portions 247.

Referring still to Figs. 16-18, resistance brake 223 of coupling system 220 operates in a manner well-known to those skilled in the art. Resistant brake 223 serves to increase or decrease the load on the pulley through the sheave point 228/belt 230 arrangement. Coupling system 220 is secured to base portion 212 of frame 210 through plate 231. Similarly, resistant brake 223 is secured to mid portion 214 of frame 210 through bracket 227.

Referring to Figs. 20 and 21, another alternate embodiment of the present invention is shown. When possible, identical two-digit reference numerals will be used to designate similar structure found in the preferred embodiments previously described, but with a 200 series prefix and a "j" suffix. Frame 210j comprises a base portion 212j, a mid portion 214j, and a top portion 216j. A coupling system 220j is included having identical components of the coupling system 220 described above. Furthermore, coupling system 220j performs in an identical manner to coupling system 220 described above.

A pair of reciprocating members 232j are also included, each having a first end 234j on which rollers 236j are mounted. The second end 238j of each reciprocating member 232j is pivotally connected via a journal member 225j to one end of each crank 224j. Again, two linkage assemblies 240j are included, each having a first link 242j and a second link 244j. Each link 244j supports a foot platform 250j over end 251j. Additionally, each link 244 is pivotally connected, preferably in front of foot platform 250j to a reciprocating member 232j proximal end 234j at connection 243j.

Link 242j is fixed at one end to journal member 225j. Thus, each link 242j is fixed relative to corresponding crank member 224j. The other end of each link 242j includes a roller 241j which engages portion 245j of link 244j. A handle portion 247j is available to be gripped by the user.

Referring to Fig. 21, the alternate embodiment previously shown in Fig. 20 is depicted with arm members 248j. Each arm member 248j includes two links 261j and 262j. Link 261j is pivotally connected at pivot connection 257j to top portion 216j of frame 210j. The other end of each link 261j is pivotally connected at connection 246j to one end of link 262j. The other end of link 262j is pivotally connected at pivot point 265j to end 234j of a reciprocating member 232j. Each link 261j includes a handle portion 247j which the operator grips during operation of the apparatus.

In the operation of the alternate embodiment as shown in Figs. 20 and 21, the user ascends the device from the side or the rear with ease, places both feet on foot platforms 250j grabs handle portions 247j and begins a climbing motion. At that point, first end 234j of each reciprocating member 232j is displaced in a linear manner in the direction of arrow 96. Similarly, as in the case of the preferred embodiment, end 238j of each reciprocating member 232j moves in an orbital and preferably a circular motion about axis 226j as shown in phantom by circle 92 (see Fig. 16). Again, the change from a linear movement at ends 234j of reciprocating members 232j to a circular movement at ends 238j of reciprocating member 232j is an approximate ellipse of varying shape depending on its location along the length of reciprocating member 232j. As in the case of the preferred embodiment, as journal member 225j revolves in a circular path as shown by circle 94 (Fig. 16) about axis 226, roller 241 revolves in a circular path about axis 226 as shown in phantom line by circle 93 (see Fig. 16). This serves to provide for a substantially elliptical path for foot platform 250j yet provides that platform 250j will remain substantially parallel with the floor "F" or other reference plane as described above with respect to Figs. 16 and 19.

Referring now to the operation of the alternate embodiment including arm members as shown in Fig. 21, the operation of the hands through arcuate path 98 is facilitated by the reciprocating motion of rollers 236j along base portion 212j. Such lateral movement in the direction of arrow 96 serves to laterally displace pivot connection 265j which, through links 261j and 262j, oscillates handle portion 247j in an arcuate path 98. The radius of arcuate path 98 is determined by the distance from the handles to pivot connection 246j which defines the radius of the circle of the arcuate path 98.

Referring to Fig. 22, another alternate embodiment is shown. As in the case of the previous embodiments, similar structure will be referred to with the same two-digit reference numeral when possible but with a 200 series prefix and a "k" suffix.

Frame 210k comprises a base portion 212k, a mid portion 214k and a top portion 216k. A coupler system 220k is shown which includes the same components and functions identical with the coupling system 220 of the alternate preferred embodiment. Two reciprocating members 232k are included, each having a first end 234k to which a roller 236k is attached. The other end 238k of each reciprocating member 232k is pivotally connected to one end of a crank 224k of coupling system 220k. This present alternate embodiment includes two identical link assemblies 240k. Each link assembly 240k includes two pairs links 242k'/242k" and 244k'/244k". As shown, link 242k' is pivotally mounted parallel with link 242k", and link 244k' is pivotally mounted parallel to link 244k". A foot platform pedal structure 241k is pivotally attached to ends 239k of links 244k'/244k" at pivot connections 243k'/243k". Foot platform pedal 242 is also pivotally attached to end 234k reciprocating member 232k through pivoted connection 243k'. Links 244k'/k" are pivotally connected at ends 245k to a pivot plate 246k. Links 244k'/244k" are pivotally connected at one end through pivot connections 239k to pivot plate 246k. The other end of link 242k" is pivotally connected at pivot point 257k" to top

portion 216k of frame 210k. Link 242k' is pivotally connected through pivot connection 257k to the top portion 216k of frame 210k as well. However, the connection at 257k' is not the upper end of link 257k'. Rather, as shown, link 248k extends upwardly therefrom and includes a handle portion 247k at its opposite end which is used by the operator. Each foot platform pedal 241k includes a foot platform 250k on which the user places his foot during operation of the apparatus.

As in the case of the previous embodiments, this alternate embodiment includes a resistant brake 223k which serves to increase or decrease the load on the pulley 222k of coupling system 220k through the sheave 228k/belt 230k arrangement. Resistant brake 223k in combination with the sheave 228k/belt 230k arrangement operates in the identical manner to resistant brake 23 and sheave 28/belt 30 of the preferred embodiment as discussed above. As shown, coupling system 220k is mounted to base portion 212k by a plate 231k. Similarly, resistant brake 223k is mounted to mid portion 214k of frame 220k by a plate 227k.

In the operation of this alternate embodiment, the user ascends the device from the side or the rear and begins the climbing motion using foot platforms 250k. The user also grabs handle portions 247k and begins an oscillating motion. Since each link 242k' is pivotally connected at connection 257k', the handle portions define an arcuate path as shown by arrow 100. During the climbing motion, foot platforms 250k define a substantially elliptical path as shown by path 94. In the operation of this embodiment, the movement of linkage assemblies 240k maintains foot platform 250k substantially parallel with the floor or other reference plane at all times while the foot platform revolves through elliptical path 94. As in the case of the alternate preferred embodiment and as shown in Figs. 16 and 18 and discussed above, the shape of each pedal may be selected to orient each platform 250k at an acute angle relative to the floor but parallel to one another and a reference plane "R". Thus, in the operation of this embodiment, as each platform revolves in a substantially elliptical path,

each such platform 250k remains substantially parallel to a reference plane as it revolves through path 94.

Each linkage assembly 240k comprises two parallelograms, the first defined by parallel links 242k'/242k" top portion 216k between connections 257k'/257k" and the pivot plate 246k between pivot connections 239k'/239k". The second parallelogram is defined by links 244k'/244k", foot platform pedal 241k and pivot plate 246k. As in the case of the previous embodiments, the climbing motion which the operator imposes on platforms 250k serves to revolve point 225k in a circular path about axis 226k. Linkage assemblies 240k serve to ensure that foot platforms 250k remain substantially parallel with the floor or a reference plane as it revolves in the predetermined substantially elliptical path 94.

Referring to Figs. 23 and 24, in yet another alternate preferred embodiment, a frame 310 is shown comprising a base portion 312, a mid portion 314, and a top portion 316 referring briefly to Fig. 24, the frame 310 comprises two bottom portions 312' and 312", two mid portions 314' and 314", and two top portions 316' and 316". In essence, the frame is comprised of two separate frame elements designated with ' and ". Obviously, variations can be made to frame 310 as disclosed without departing from the spirit of the invention.

A coupling system 320 is fixed relative to the frame and comprises a pulley 322, crank members 324, resistant brake 323, sheave 328 and belt 330. Two reciprocating members 332 are positioned in the lower proximity of frame 310. Each reciprocating member 332 has one end 334 which is adapted to move in a linear direction as shown in Fig. 23. A roller 336 is mounted at each end 334 of reciprocating member 332 and is adapted, as shown in Fig. 24, to ride on base portion 32 of frame 30. Alternatively, roller 336 may directly engage the floor, if desirable. The other end 338 of each reciprocating member 332 is pivotally connected to one end of a crank 324. The pivotal connection at end 338 may be through a pivotal connection member 325 (see Fig. 24) which extends between the other

ends 338 of reciprocating members 332 and cranks 324. The other end of crank 324 is attached to pulley 322 at the pivot axis 326 of the coupling system 320. The pivot axis 326 is the axis about which pulley 322 rotates.

The present invention also includes two foot members, or contact members, 340. Each foot member 340 is pivotally attached proximate a first end 342 through a pinned connection 344 to a reciprocating member 332. A foot platform 350 is attached to the top surface of each foot member 340 at its first end 342. A reference plane R' is shown as the top of each foot member. However, a reference plane may be defined within any fixed plane of each foot member 340 or foot platform 350 such as is shown, for example, by R".

Each foot platform 350 has a top surface which the foot of the user contacts in the operation of the apparatus. Each foot member 340 is pivotally attached at its other end 346 to an arm member 348. Each arm member 348 is also pivotally attached proximal its other end to the top portion 316 of frame 310. A handle portion 347 is included at the top end 349 of each arm member 348.

Referring to Fig. 24, it can be easily seen that the frame 310 comprises dual base portions 312'/312", mid portions 314'/314" and top portions 316'/316". Furthermore, it can be seen that reciprocating members 332, foot members 340, foot platforms 350 and arm members 348 provide identical dual systems; each system resting on a base portion 312' or 312" of the frame and each arranged to accommodate one foot and one arm of the user.

In the operation of this embodiment the user "U" can ascend the present invention from the back or the sides which facilitate its use. During operation the user places one foot on each foot platform 350 and begins a climbing motion which results in the displacement of first ends 34 of each reciprocating member 332 in the direction of arrow 101. Similarly, an orbital motion, which in the described arrangement is circular, occurs at the second end 338 of each reciprocating member 332 about pivot axis 326.

However at points between opposite ends 334 and 338 of each reciprocating member 332, the motion gradually changes from a circular motion (at ends 338) to a linear motion at ends 334. This geometric transition occurs in the form of an approximate elliptical path 102. It is not a perfect elliptical shape, and it tends to be slightly more egg-shaped. However, it provides a more natural and rhythmic body movement. Additionally, during operation, the upper end 349 of each arm member moves in an arc as shown by arrow 103. Resistant brake 323 of coupling system 320 operates in a manner well known to those skilled in the art. Resistant brake 323 serves to increase and decrease the load on the pulley through the sheave 328/belt 330 arrangement. Thus, resistant brake 323 serves to increase or decrease the extent of the cardiovascular workout. Such permits hand/arm/shoulder movements for exercising the upper body muscle group while continuing the cardiovascular exercise.

In addition to the revolution of the foot platform in a preferred substantially elliptical path as noted above, the present invention provides that a reference plane will remain parallel with the floor throughout at least a portion of the lower half of the elliptical path. If the reference plane is the top contact surface of the foot platform 350 which the user's foot engages, then the top surface of each foot platform will remain substantially parallel with the floor as that foot platform advances initially rearwardly proximate the forward end of the elliptical path along the lower half of the ellipse. It may be desirable to select a reference plane other than the top surface of the foot platform, such as R'' in Fig. 23, if it is desirable to orient the top of the foot platform at a slight angle relative to the floor while the reference plane remains substantially parallel with the floor as the foot platform advances initially rearwardly through at least a portion of the lower half of the elliptical path from the forward end of the elliptical path. The orientation of the top of the foot platform at a slight angle as noted above is shown by phantom line 350' in Fig. 23.

To further understand the operation of the present invention, it may be helpful to describe the creation of the preferred elliptical path. The term "two point control" shall be used to describe the creation of the preferred elliptical path defined by two points. The two point control geometric configuration will provide for the orientation of a reference plane (which in this example shall be the top surface of the foot platform 350) substantially parallel for that portion of the ellipse between the two points which define the path, which is a portion of the forward end of lower half of the elliptical path as set forth herein, a geometric configuration is also provided for a "three point control" to define the elliptical path. The three point control configuration defines the lower half of an elliptical path wherein a reference plane (which again in this example shall be the top surface of the foot platform) remains substantially parallel with the floor between the three points, or the lower half of the elliptical path.

Referring now to Figs. 25(a)-25(c) and Fig. 26, the two point control system shall be described. With respect to Figs. 25(a)-25(c) and Fig. 25(a) in particular, a reciprocating member 332 and a foot member 340 are shown in the most forward position of what will be substantially elliptical path 102 of Fig. 23. This most forward position is defined by point 344A. In this position, second end of member 332 is point 325A which is on the circle about pivot axis 326.

The configuration of Fig. 25(a) is selected so that point 344A will be the most forward position on the elliptical path. In this configuration, foot member 340 is then oriented substantially parallel with floor F. This ensures that the top surface of foot platform 350 is also oriented substantially parallel with floor F. If a reference plane other than the top surface of foot platform 350 is selected, then the reference plane is oriented substantially parallel with the floor. Thus, a point 346A is defined in space at the second end of foot member 340. Concurrently, the second end of member 332, which is revolving around axis 326, defines a point 325A.

Referring now to Fig. 25(b), the second end of member 332 is rotated about axis 326 until foot member 340 is repositioned so that pivot point 344B defines the lowest point of the elliptical path. Since members 332 and 340 are pivotally connected at 344, this defines a point 325B of the circle generated by the second end of member 332 about axis 326 which also coincides with the lowest point of that circle. Once again, member 340 is oriented substantially parallel with floor F so that the top of foot platform 350 is also substantially parallel with floor F. Once again, if a reference plane other than the top surface of foot platform 350 is selected, then that reference plane is oriented substantially parallel with the floor. In this manner, the most forward point (344A) and the lowest point (344B) of the substantially elliptical path are defined.

Referring now to Fig. 25(c), points 346A and 346B are plotted which are used to define two points of a larger circle. This larger circle defines the relative location of member 348 with respect to foot member 340 and serves to ensure that while member 348 oscillates, the foot platform will remain substantially parallel with the floor through at least a portion of the forward end of the lower half of the elliptical path. A vertical line 104 is projected upwardly from point 346B. Point 346B is selected for the vertical projection since the larger circle, defined by the rotation of arm members 348, is tangential to substantially elliptical path 102 at point 346B. Next, a line 105 is drawn connecting points 346A and 346B. A line 106 is then constructed from the midpoint of line 105 and perpendicular to line 105. The intersection of lines 104 and 106 defines the pivot point 343 for the connection of the arm member 348 to frame 310. Thus, this geometric configuration ensures that points 346A and 346B will move within the circle defined by the radius 104 and that elliptical path 102 has most forward point 344A and lowest point 344B. In this manner, the top surface of foot platform 350 will remain substantially parallel with floor F through at least the distance from points 344A to 344B of the lower half of substantially elliptical path 102 of Fig. 23. The construction of an elliptical

path in accordance with the geometrical layout of Figs. 25(a) through 25(c) is shown in Fig. 26 and designated as elliptical path 102'. Thus, as the foot platform 350 revolves along elliptical path 102', each foot platform will remain substantially parallel with the floor as it advances initially rearwardly proximate the forward end of the elliptical path along a portion of the lower half of the elliptical path 102'.

Referring now to Fig. 26, it can be seen that the vertical distance between the most forward point 344A of elliptical path 102' and the lowest point 344B of elliptical path 102' defines a distance "Y" which also coincides with the vertical distance between points 346A and 346B along circle 107. Circle 104 also defines the oscillating motion of arms 348 which are gripped by the user and reciprocated during operation.

In this manner, two points are used to define a preferred elliptical path which ensures that the top portion of foot platform 350 will remain substantially parallel through at least a portion of the forward end of the lower half of the ellipse. This provides for preferred anatomical and ergonomical benefits during the exercise motion of the foot, ankle and knee as described herein.

Referring now to Figs. 27(a)-27(d) and Fig. 28, the three point control system will be used to describe the creation of a substantially elliptical path 102" which provides that the top of each foot platform 350 will remain substantially parallel with the floor F through substantially the lower half of the substantially elliptical path. As noted above, this example will be given in terms of each reference plane R' being the top of a foot platform 350. It may be desirable to use a reference plane for each linkage assembly other than the top of a foot platform. In any event, the application is the same as noted herein.

Referring to Fig. 27(a), the foot member is first located in the most forward position of what will be elliptical path 102". This defines a point 344A'. In this position, the second end of member 332, which is pivotally connected to member 340, defines a point 325A on the circle about pivot

axis 326. In this most forward position, foot member 340 is once again oriented substantially parallel with floor F to ensure that the reference plane (the top of the foot platform) is oriented substantially parallel to the floor. Once again, if a reference plane other than the top surface of foot platform 350 is selected, then that reference plane is oriented substantially parallel with the floor. This defines a point 346A' at the second end of member 340. As noted earlier, this configuration also ensures that foot platform 350 will be substantially parallel with the floor at the forward position of substantially elliptical path 102".

Referring to Fig. 27(b), reciprocating member 332 is then pivoted about pivot axis 326 to a second point which the designer may select to be proximate the mid axis of the ellipse, but its location is not critical other than orienting it proximate the mid portion of the lower half of the ellipse of what will be elliptical path 102". This defines a point 344B' on elliptical path 102". Once again, arm member 340 is oriented substantially parallel with the floor which defines point 346B' of the second end of member 340, and ensures that the top surface of foot platform 350 (or another previously defined reference plane) remains substantially parallel with the floor F.

Referring to Fig. 27(c), the second end of member 332 is then rotated about pivot axis 326 until member 340 is at the most rearward portion of the elliptical path 102", ensuring that member 340 remains substantially parallel with the floor F. This defines a third point 344C' of the elliptical path 102" and also a point 346C' in space for purposes of defining the relationship between arm member 348 and foot member 340.

Referring to Fig. 27(d), with points 344A' and 344B' and 344C' defined on the lower half of preferred substantially elliptical path 102", points 346A', 346B' and 346C' are defined in space. With points 346A', 346B' and 346C' defined, line 108' is drawn connecting points 346A' and 346B', and line 105' is drawn connecting points 346B' and 346C'. A line 106' is then drawn perpendicular to line 108' at the midpoint of line 108 .

Similarly, a line 104' is drawn perpendicular to line 105' at the midpoint of line 102'. Lines 104' and 106' intersect at point 346', which becomes the hinge point of the arm member 348 to frame 310 as shown in Fig. 23. This configuration will ensure that the pivotal connection of arm member 348 to foot member 340 at point 346 will remain on circle 107" and will maintain foot member 340 in the preferred substantially elliptical path 102" such that the top of foot platform 350 remains substantially parallel with the floor through at least the portion of elliptical path 102" defined between points 344A and 344C, the lower half of path 102". This configuration also ensures that handles 349 of each arm member 348 reciprocate in an oscillating path defined by arrows 104 of Fig. 23 which coincide with the arc of circle 104 of Fig. 26.

Further, it appears that the preferred location of pivotal connection 344 relative to the length of reciprocating member 332 is generally in that 1/3 portion closest to first end 334 of each reciprocating member 332. It is in this range that the movement of each foot of the user follows a more traditionally shaped elliptical path which is more natural and comfortable for the ankles and knees minimizing stress on these joints yet permitting continued cardiovascular exercise.

An improved stationary exercising device is disclosed in the foregoing preferred and alternate embodiments which maximizes cardiovascular exercise yet minimizes stress on critical joints. Obviously, modifications and alterations to the embodiments disclosed herein will be apparent to those skilled in the art in view of this disclosure. However, it is intended that all such variations and modifications fall within the spirit and scope of this invention as claimed.

The embodiments of the invention in which an exclusive property or privilege is claimed are defined as follows:

1. An apparatus for exercising comprising:

a frame having a base portion adapted to be supported by a floor;

first and second reciprocating members, each reciprocating member having a rear support and a front end;

a coupler supported by said frame defining a pivot axis and having crank members, each said crank member adapted to revolve about the pivot axis at one end and adapted to displace a reciprocating member from the other end of the crank member so that a portion of each reciprocating member proximate said rear support of each reciprocating member moves in a substantially reciprocating motion while the one end of each crank member revolves about the pivot axis;

first and second platforms for orienting the bottom of the feet of the user so that each foot of the user follows a substantially elliptical path during operation of the apparatus, each said platform positioned on a corresponding reciprocating member and inclined at an acute angle relative to a longitudinal axis of a corresponding reciprocating member to orient the user to face the pivot axis, each said platform having a heel end and a toe end; and

first and second arm linkage assemblies, each said arm linkage assembly pivotally connected at one end to a reciprocating member and pivotally connected proximal the other end of said arm linkage assembly to said frame,

wherein the toe end of each platform is level with or is higher than the heel end of the same corresponding platform at the upper most point of said elliptical path and the heel end of each platform is level with or higher than the toe end of the same corresponding platform at the lower most point of said elliptical path, and

wherein the heel end of each platform is above the toe end of the same corresponding platform during a portion of the rearward movement of each platform away from the pivot axis.

2. The exercise apparatus according to claim 1 wherein each said rear support comprises a roller attached to each reciprocating member and adapted to rollably engage the base portion of said frame.

3. An apparatus for exercising comprising:

a frame having a base portion adapted to be supported by a floor;

first and second reciprocating members, each reciprocating member having a rear support and a front end;

a coupler supported by said frame defining a pivot axis and having crank members, each said crank member adapted to revolve about the pivot axis at one end and to displace a reciprocating member from the other end of the crank member so that a portion of each reciprocating member proximate the rear support of each reciprocating member moves in a substantially reciprocating motion while the one end of each said crank member revolves about the pivot axis;

first and second platforms for orienting the bottom of the feet of the user so that each foot of the user follows a substantially elliptical path during operation of the apparatus, each said platform positioned on a corresponding reciprocating member and inclined at an acute angle relative to an axis extending from the rear support of the corresponding reciprocating member to the front end of the same corresponding reciprocating member to orient the user to face the pivot axis, each said platform having a heel end and a toe end; and

first and second arm linkage assemblies, each said arm linkage assembly pivotally connected at one end to a reciprocating member and pivotally connected proximal the other end of said arm linkage assembly to said frame,

wherein the toe end of each platform is level with or is higher than the heel end of the same corresponding platform at the upper most point of said elliptical path and the heel end of each platform is level with or higher than the toe end of the same corresponding platform at the lower most point of said elliptical path, and

wherein during operation of the apparatus as each platform initially moves rearwardly away from the pivot axis the toe end of each platform falls at a faster rate than the heel end of the same corresponding platform.

4. The exercise apparatus according to claim 3 wherein each said rear support comprises a roller attached to each reciprocating member and adapted to rollably engage the base portion of said frame.

5. An apparatus for exercising comprising:

a frame having a base portion adapted to be supported by a floor;

first and second reciprocating members, each reciprocating member having a rear support and a front end;

a coupler supported by said frame defining a pivot axis and having crank members for connecting a portion of each reciprocating member proximate the front end of each reciprocating member to the pivot axis so that the rear support of each reciprocating member moves in a substantially reciprocating motion while one end of each crank member orbits about the pivot axis; and

first and second platforms for orienting the bottom of the feet of the user so that each foot of the user follows a substantially elliptical path during operation of the apparatus, each said platform positioned on a corresponding reciprocating member and inclined at an acute angle relative to a longitudinal axis of a corresponding reciprocating member to orient the user to face the pivot axis, each said platform having a heel end and a toe end; and

first and second arm linkage assemblies, each said arm linkage assembly pivotally connected at one end to a reciprocating member and pivotally connected proximal the other end of said arm linkage assembly to said frame,

wherein the toe end of each platform is level with or is higher than the heel end of the same corresponding platform at the upper most point of said elliptical path and the heel end of each platform is level with or higher than the toe end of the same corresponding platform at the lower most point of said elliptical path, and

wherein during operation of the apparatus as each platform moves rearwardly away from the pivot axis the heel end of each platform rises above the toe end of the same corresponding platform.

Fig. 1

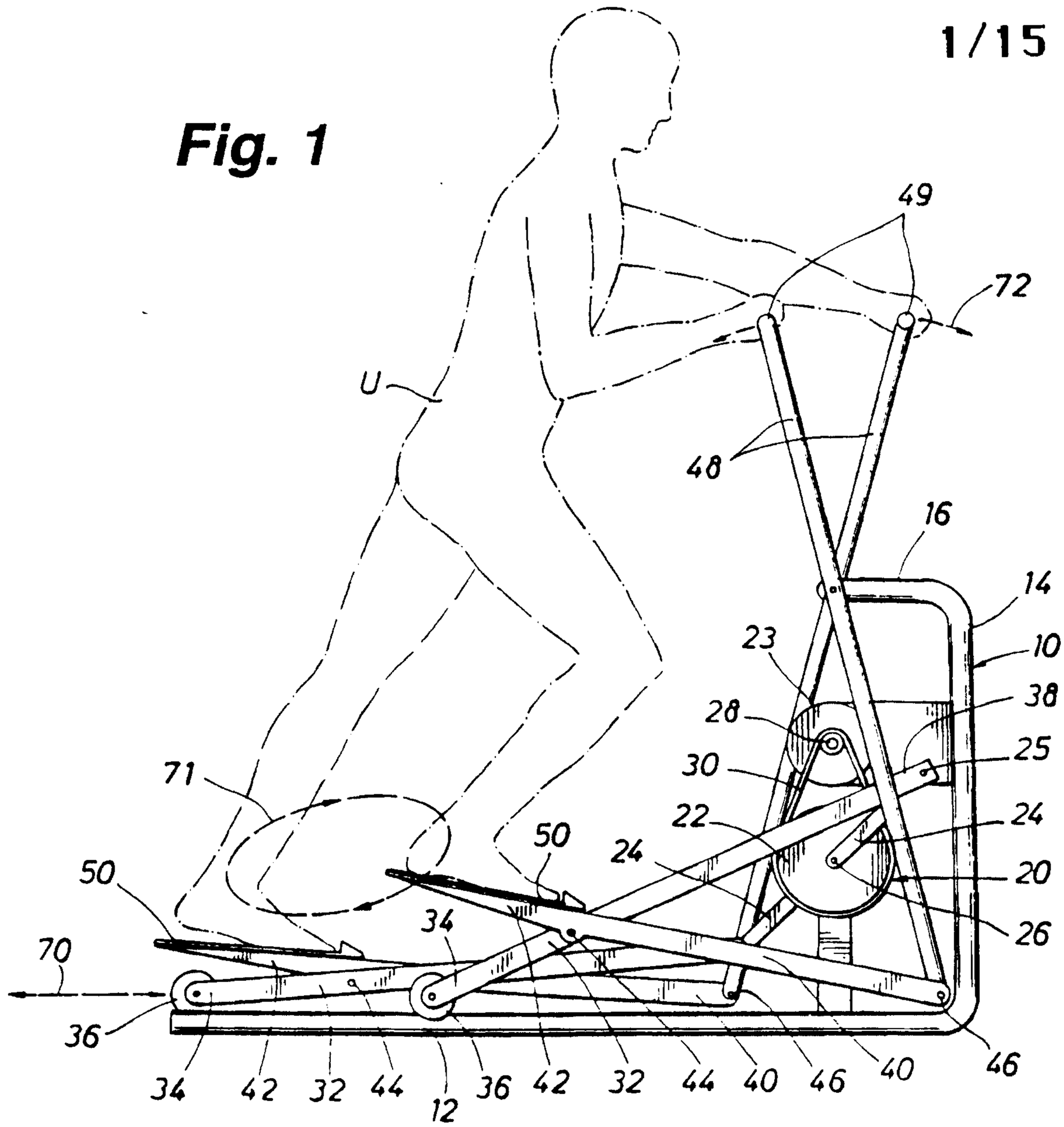
49
72
U
48
16
14
10
23
38
28
25
30
24
22
20
71
50
24
50
26
34
70
36
34
42
32
44
12
36
42
32
44
40
46
40
46

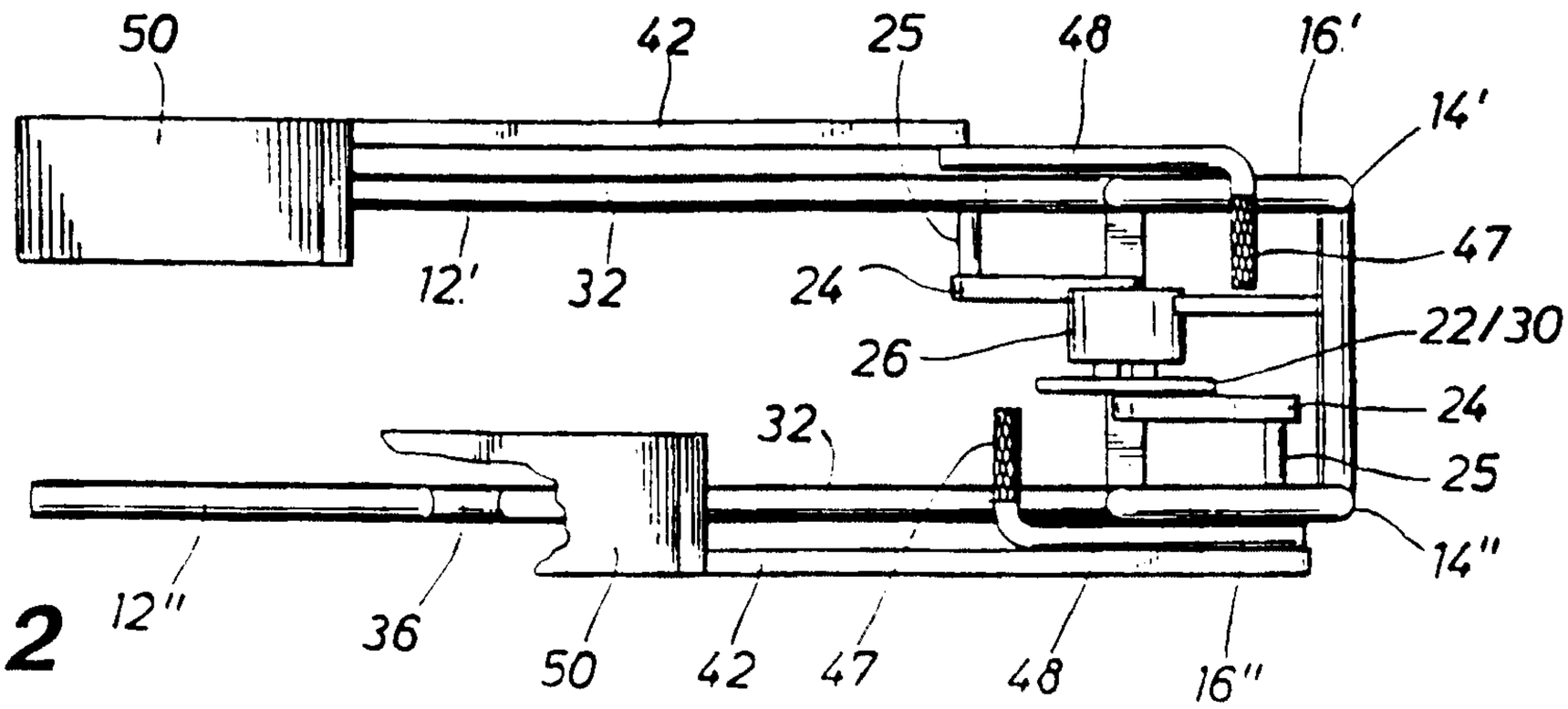
50
42
25
48
16'
14'
47
12'
32
24
22/30
26
24
32
25
14"
12"
36
50
42
47
48
16"

Fig. 2

Fig. 3

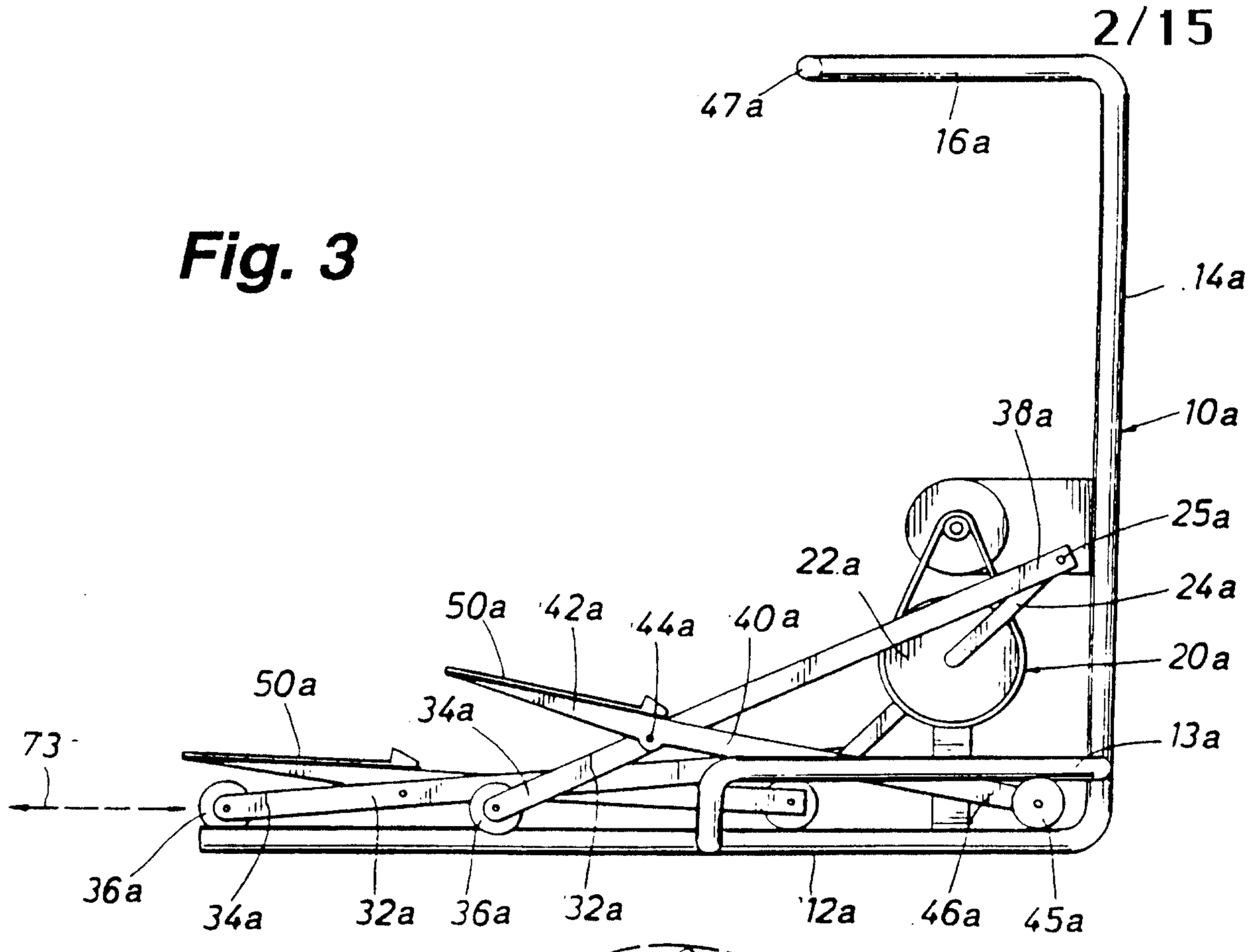

Fig. 4

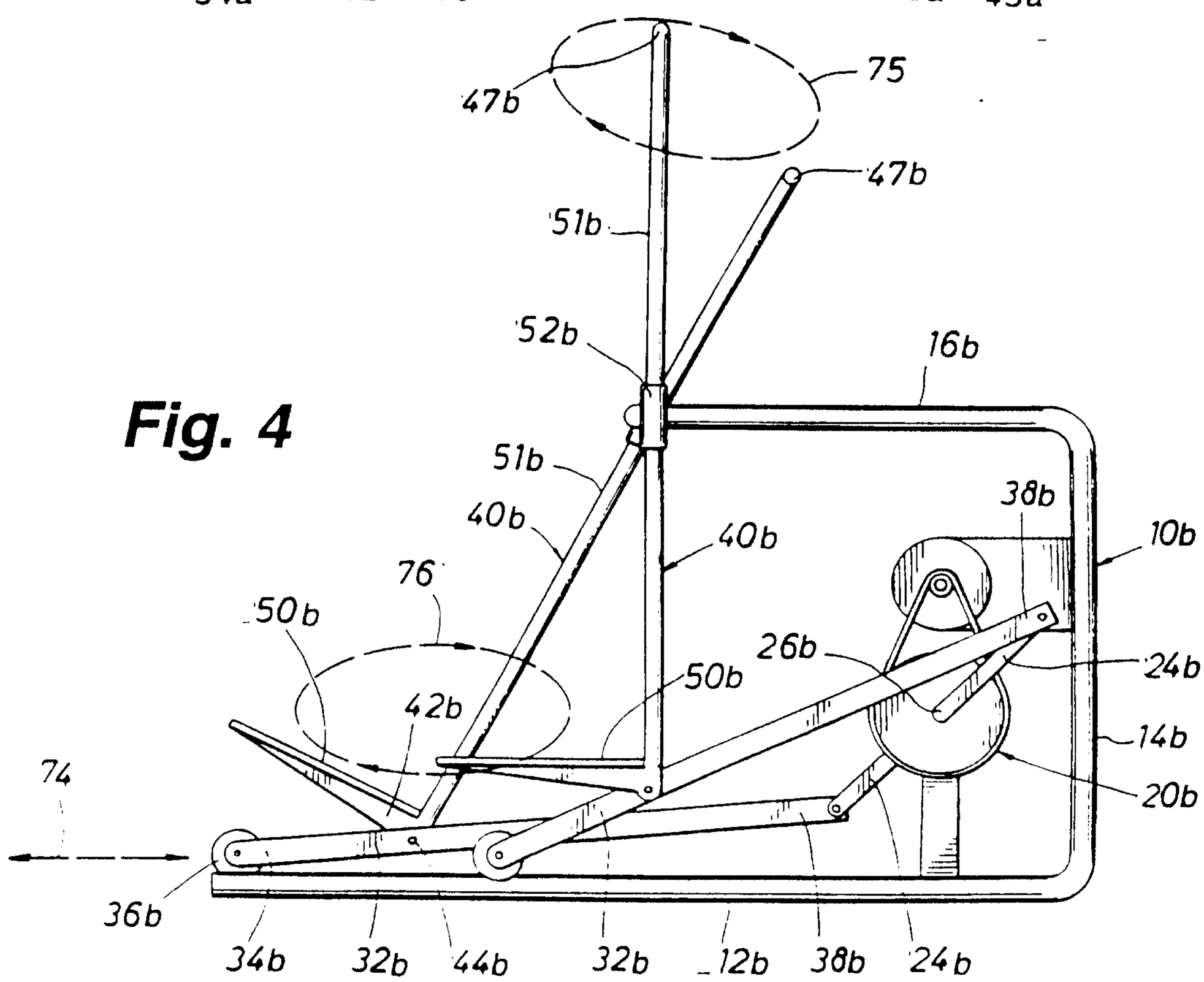

Gowling Lafleur Henderson LLP

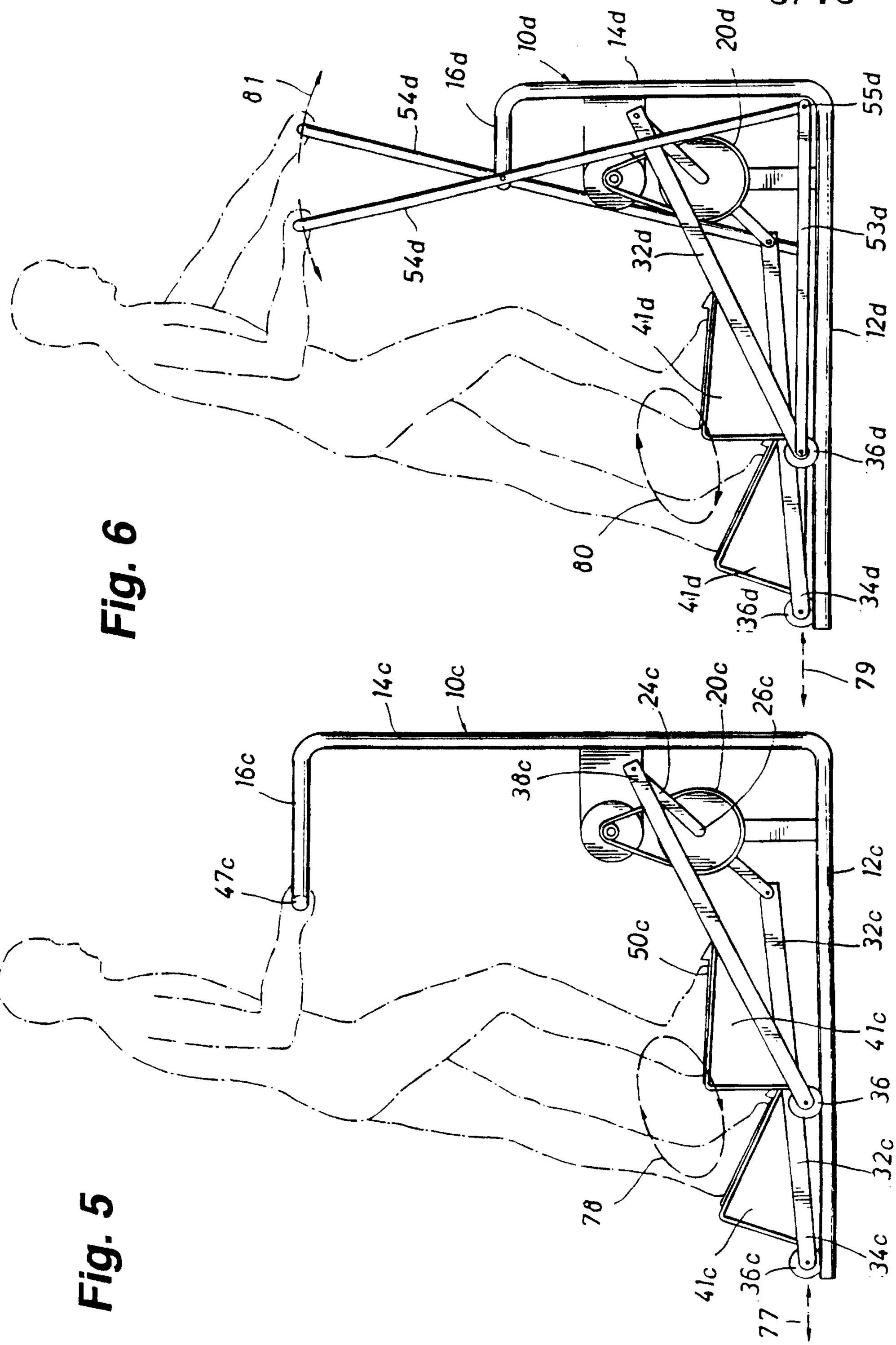

Fig. 6

Fig. 5

Gowling Lafleur Henderson LLP

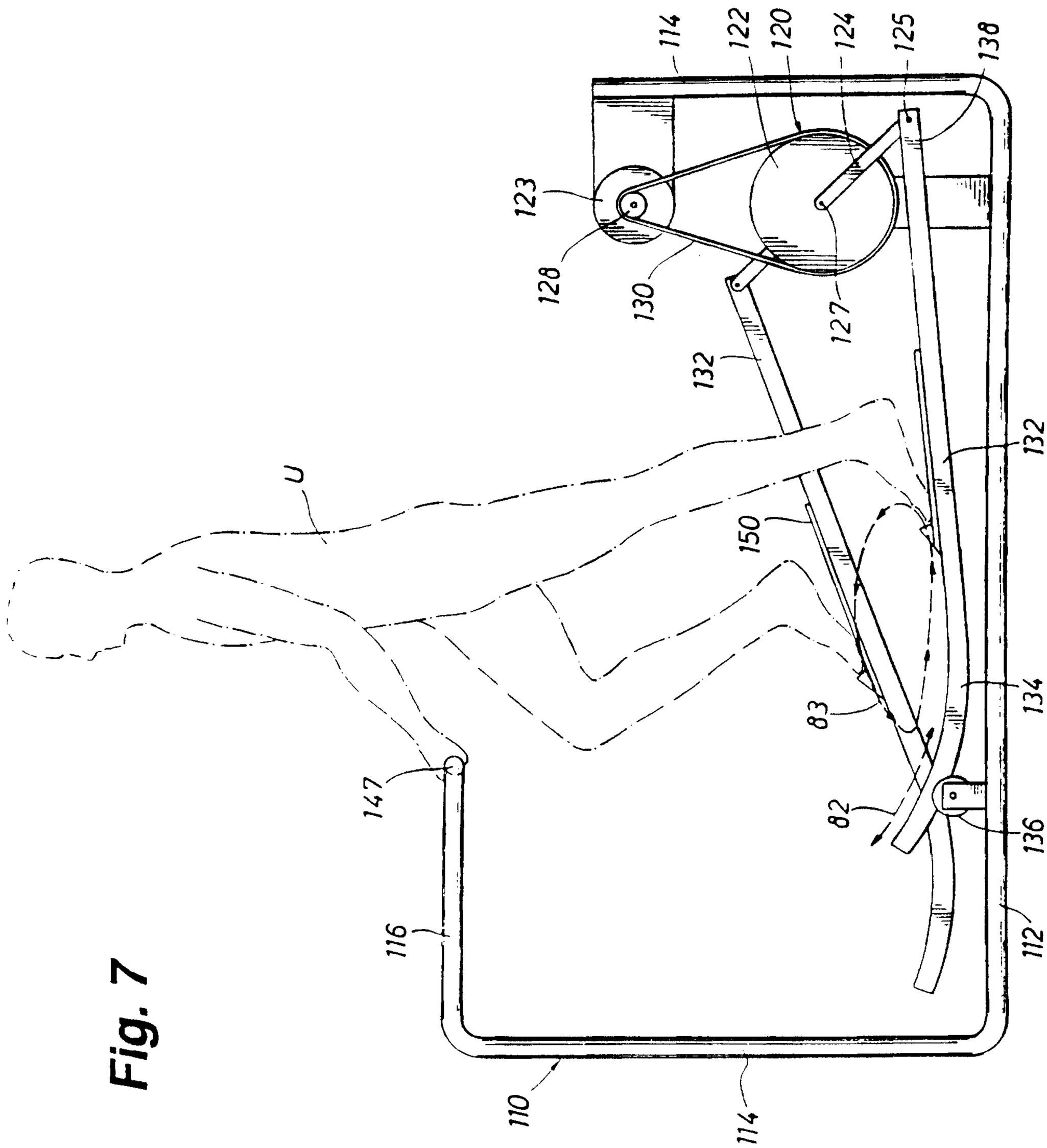
114
122
120
124
125
138
123
128
130
127
132
132
U
150
134
83
147
82
136
116
112
110
114

Fig. 7

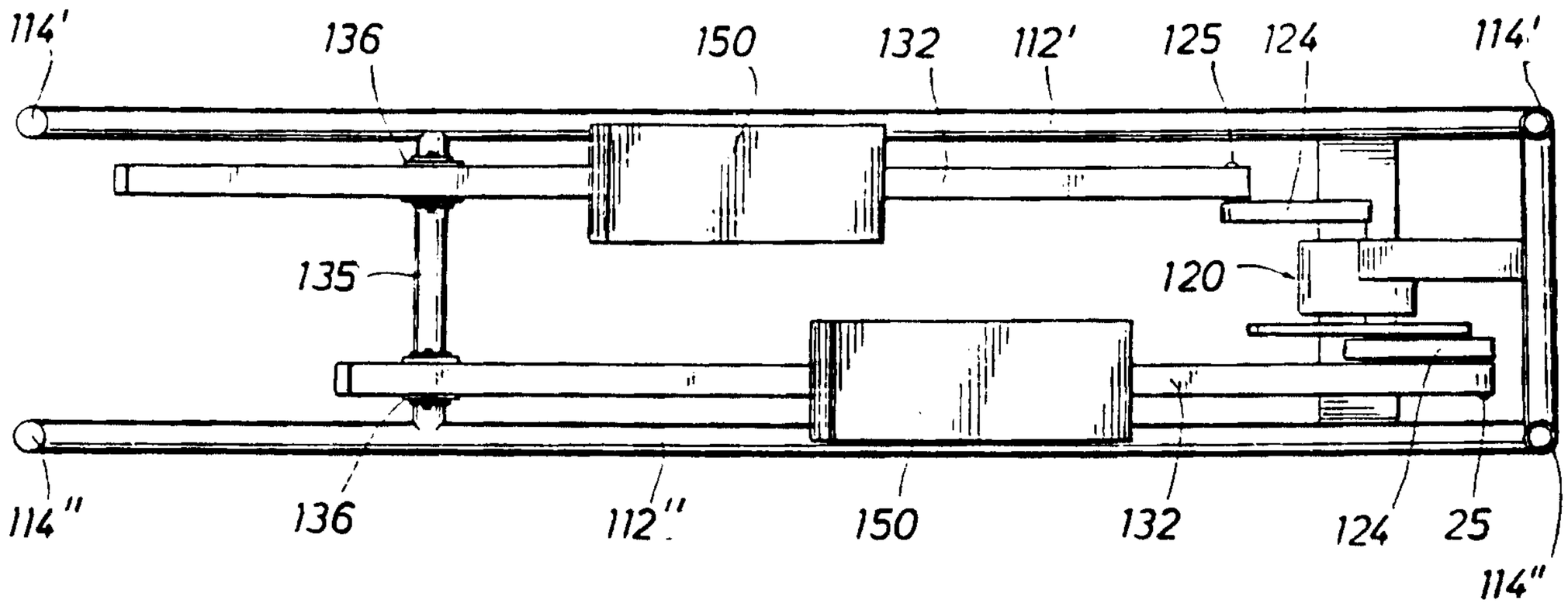
114'
136
150
132
112'
125
124
114'
135
120
114"
136
112"
150
132
124
25
114"

Fig. 8

Fig. 9

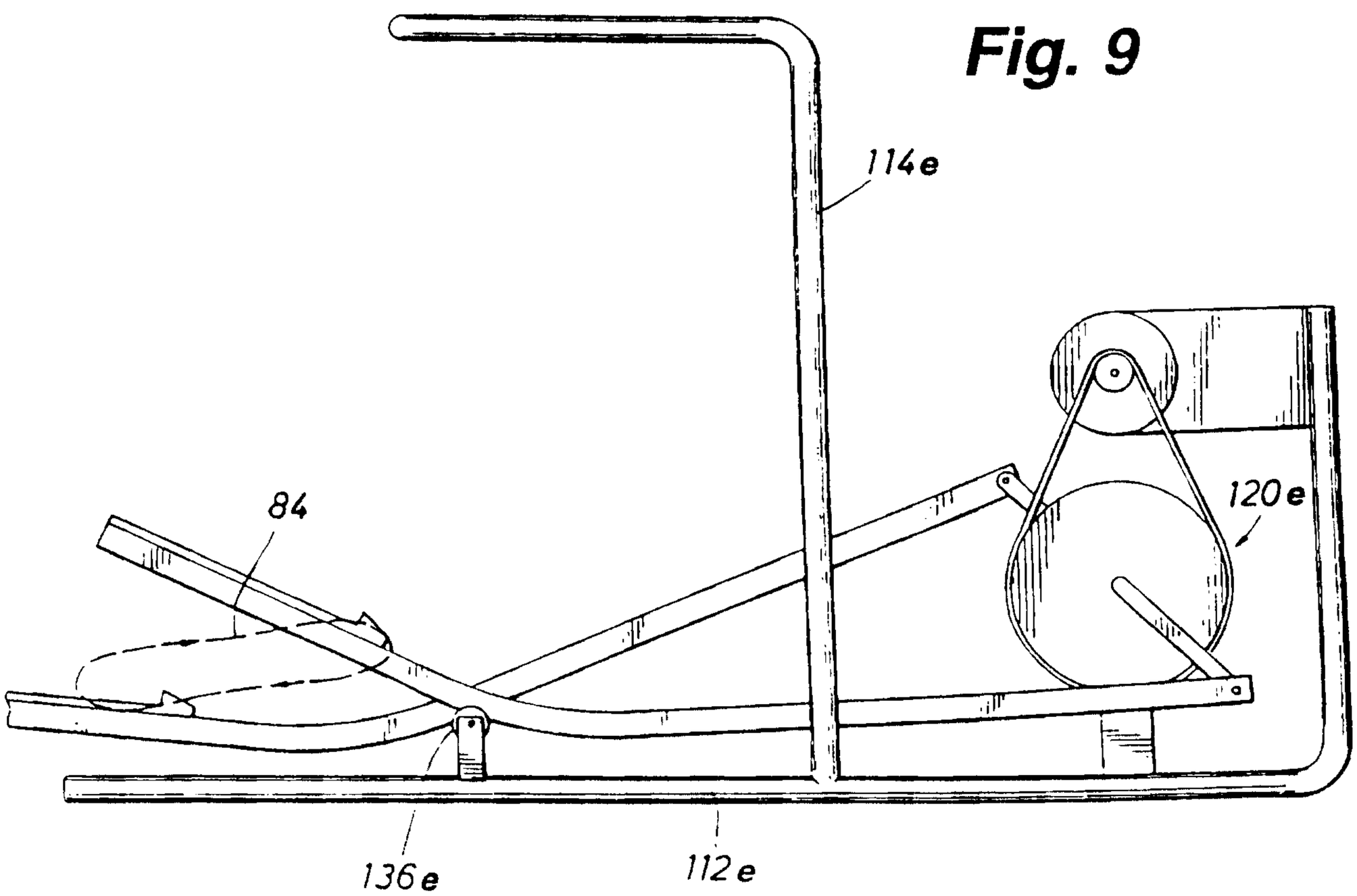
114e
84
120e
136e
112e

Fig. 10

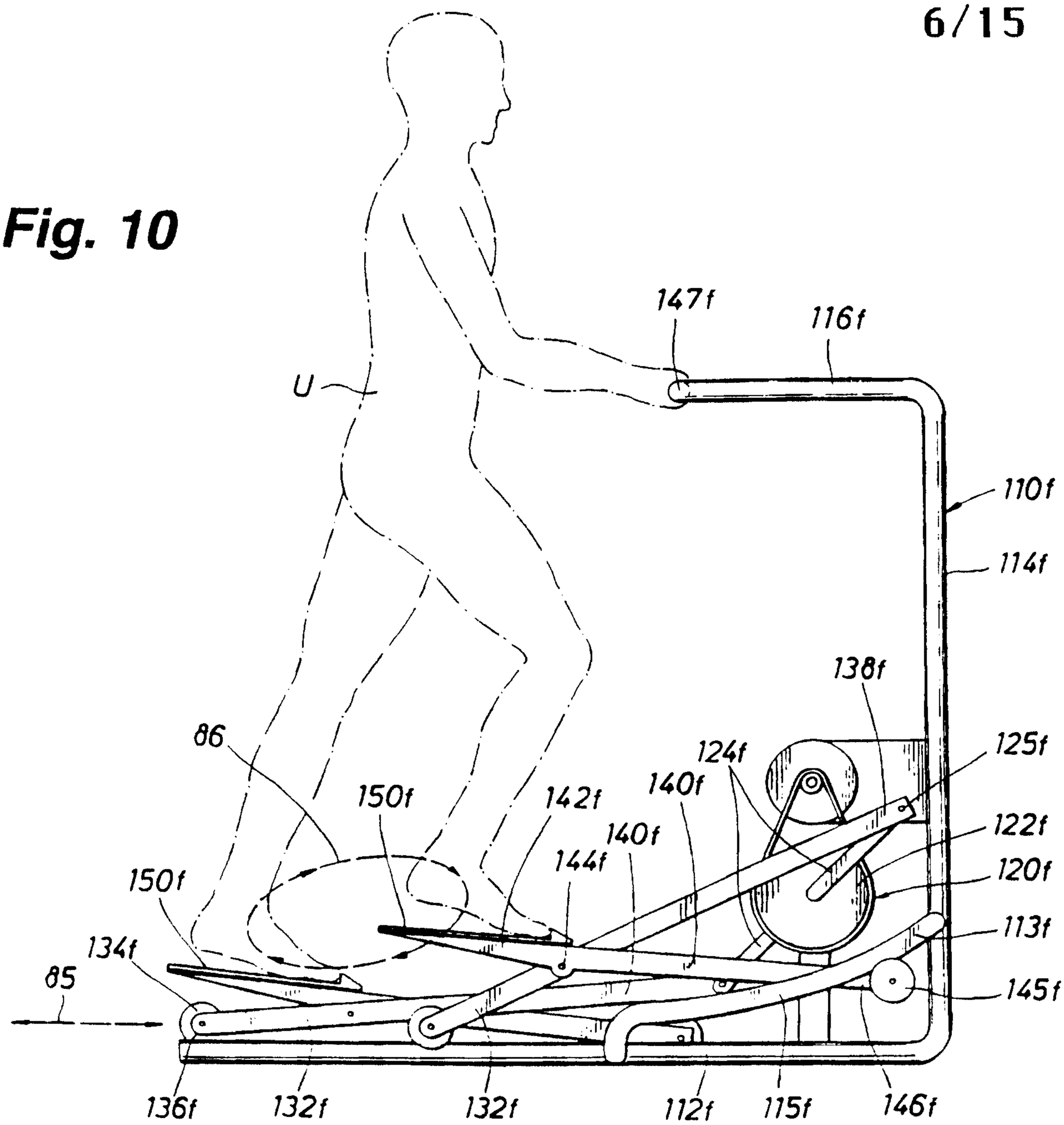

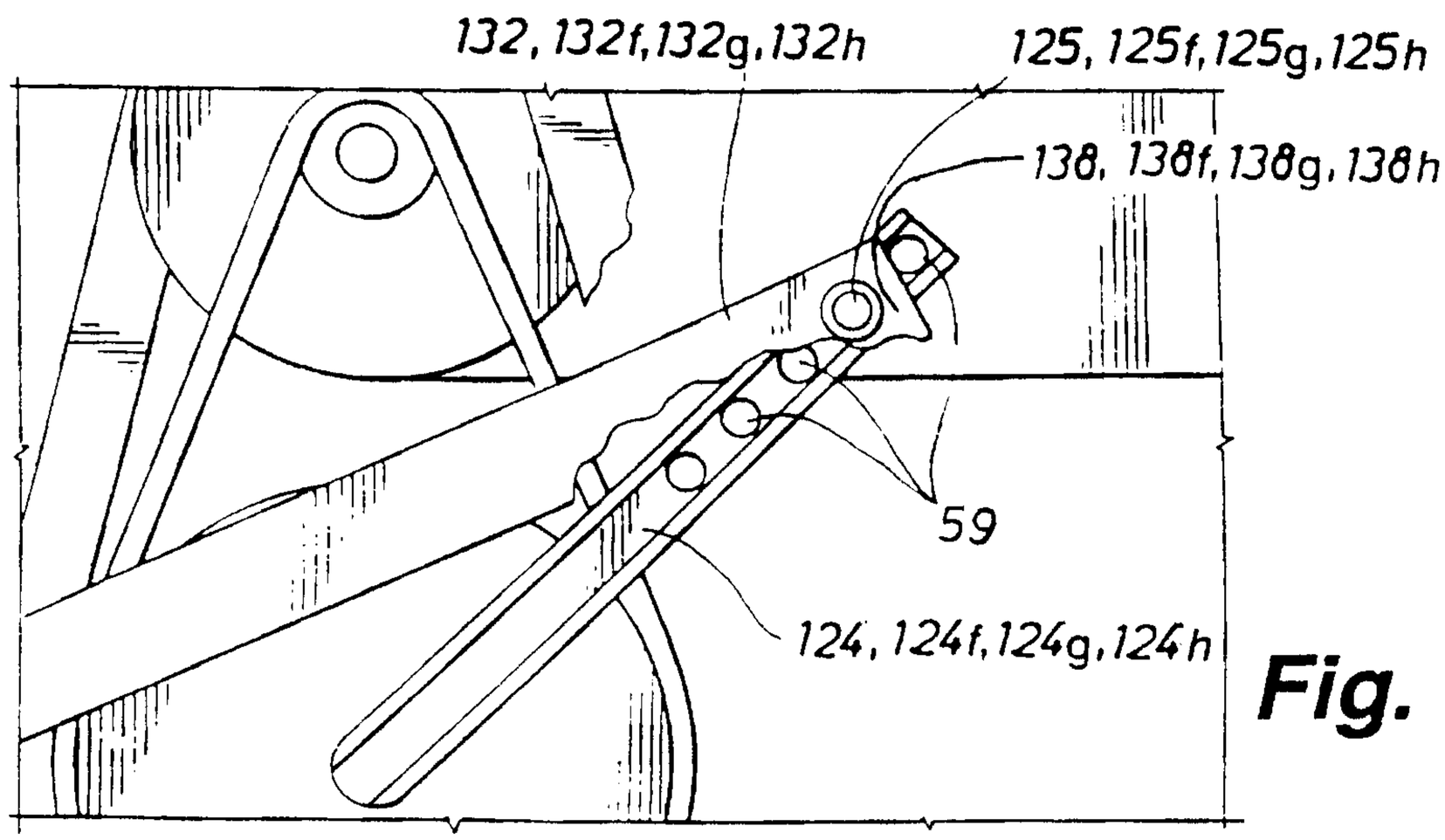

Fig. 13

Gowling Lafleur Henderson LLP

Fig. 11

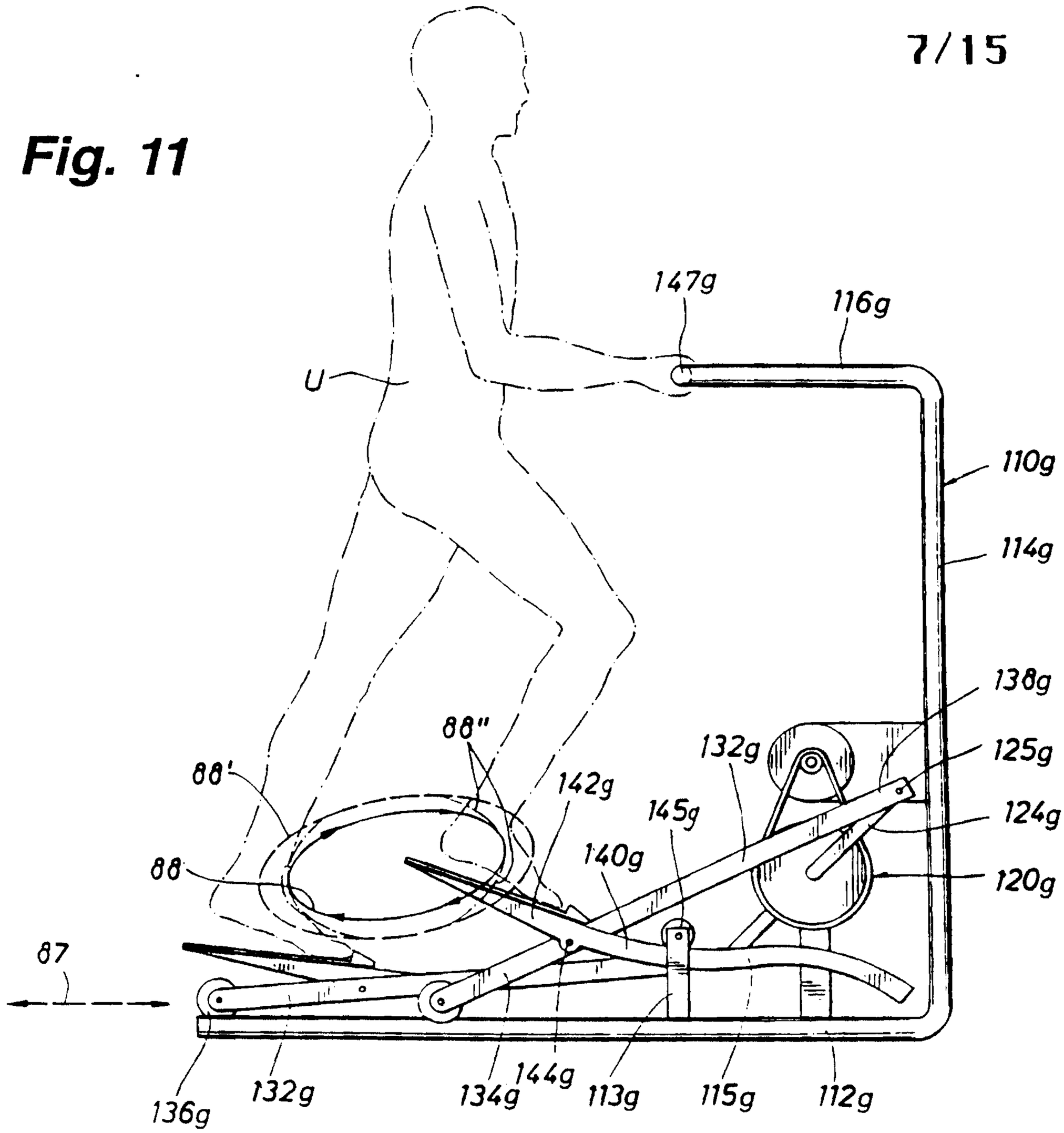
147g
116g
U
110g
114g
138g
125g
124g
120g
88"
88'
88
142g
145g
140g
132g
87
136g
132g
134g
144g
113g
115g
112g

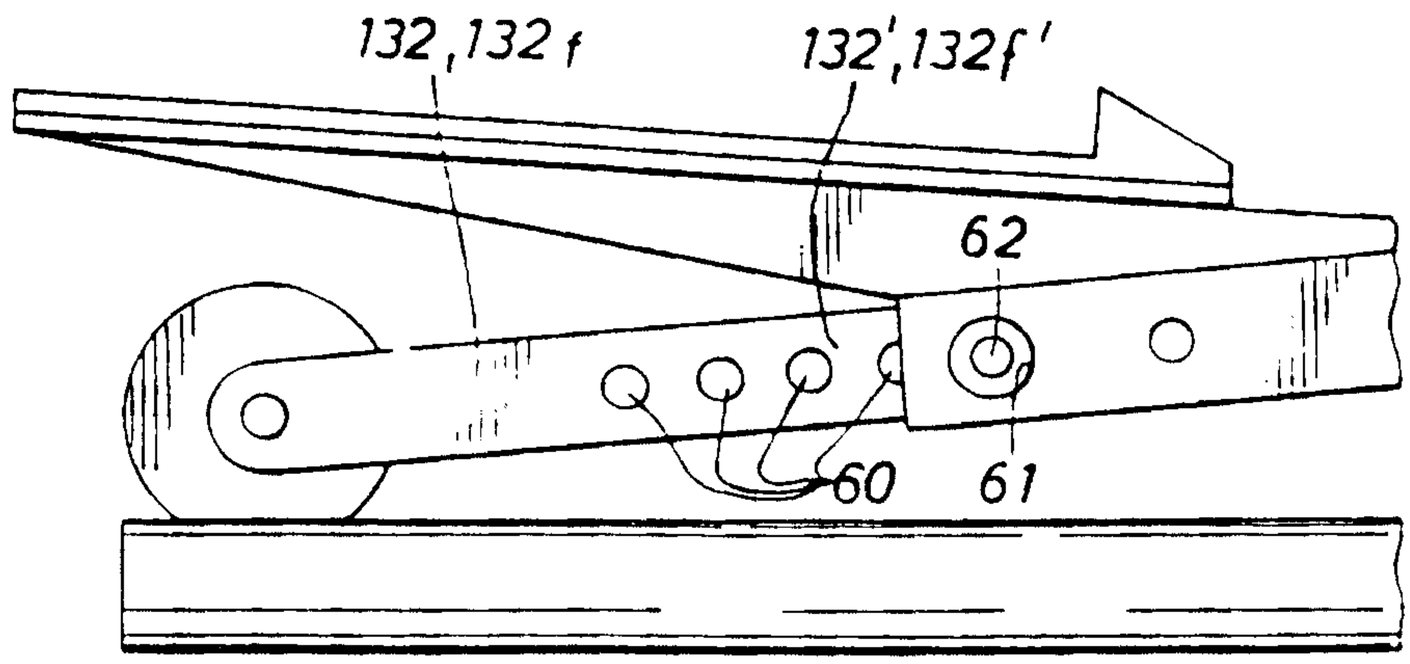
132,132f
132',132f'
62
60
61

Fig. 14

Fig. 12

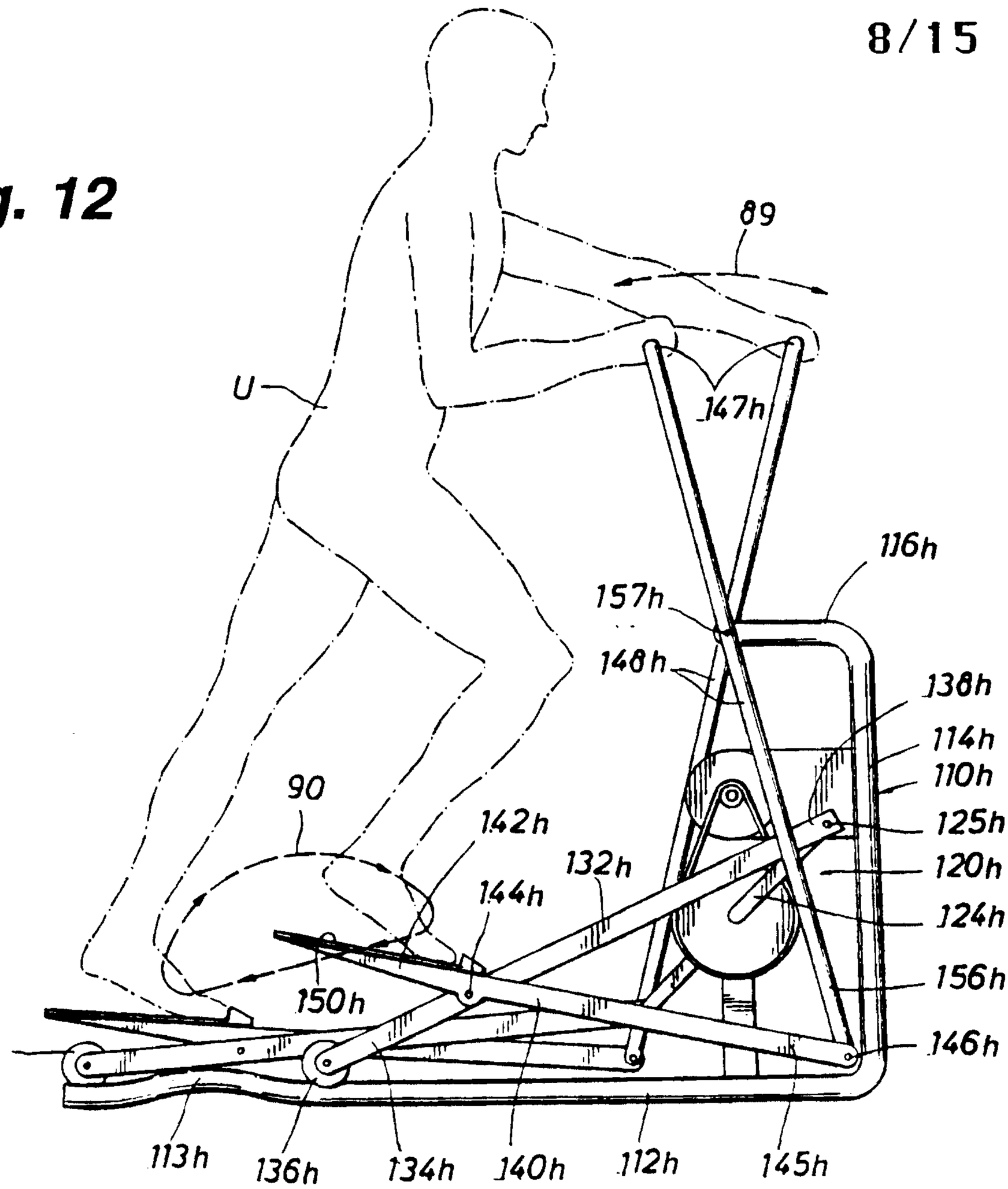

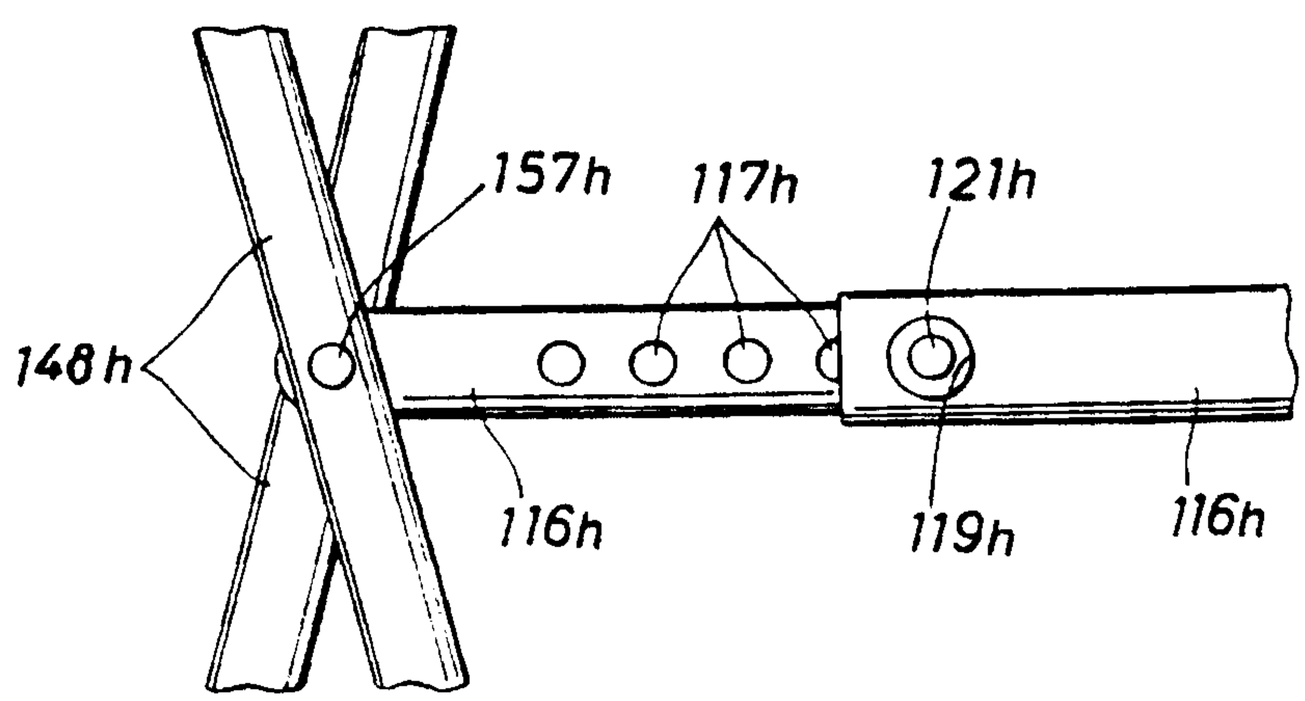

Fig. 15

Gowling Lafleur Henderson LLP

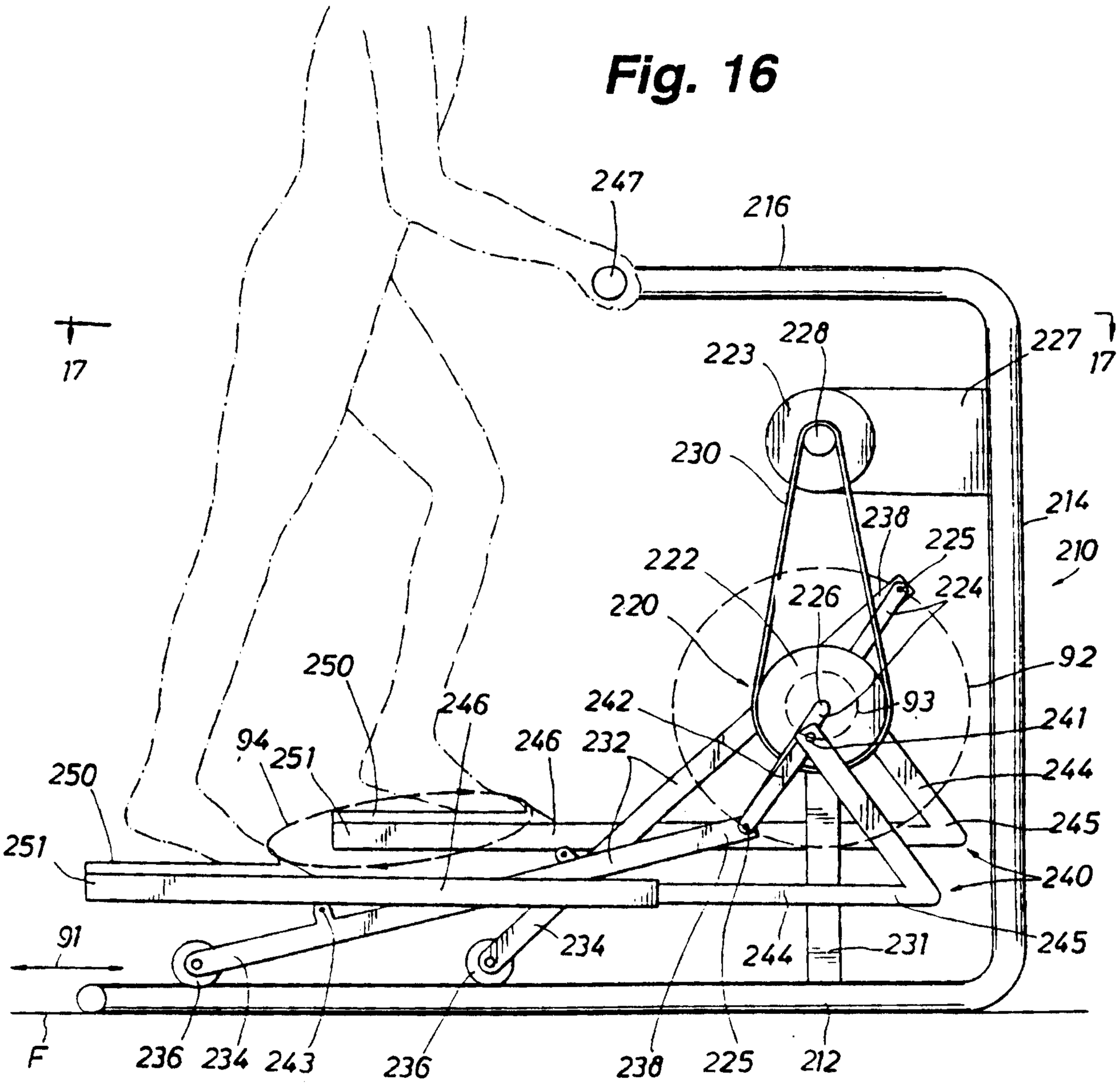
247
216
17
17
227
228
223
230
214
238
225
210
222
224
220
226
92
250
93
246
242
241
94
251
246
232
244
250
245
251
240
91
234
244
231
245
F
236
234
243
236
238
225
212

Fig. 16

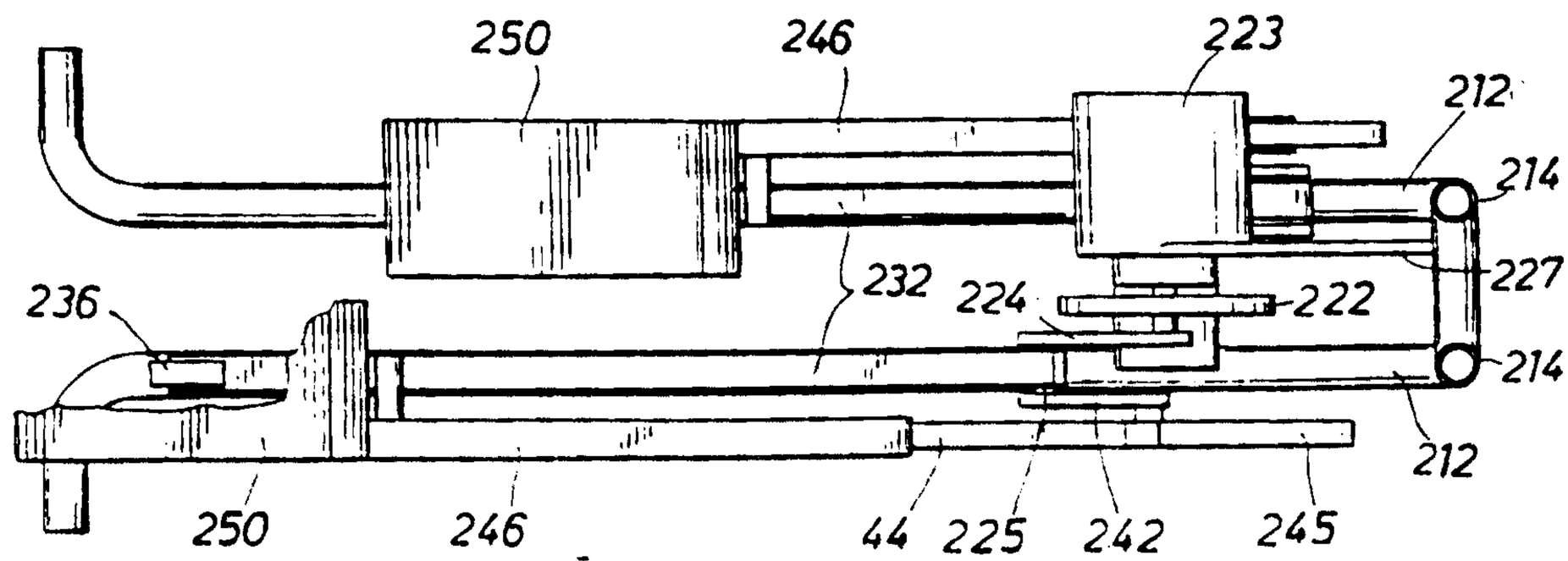
250
246
223
212
214
232
224
222
227
236
214
212
250
246
44
225
242
245

Fig. 17

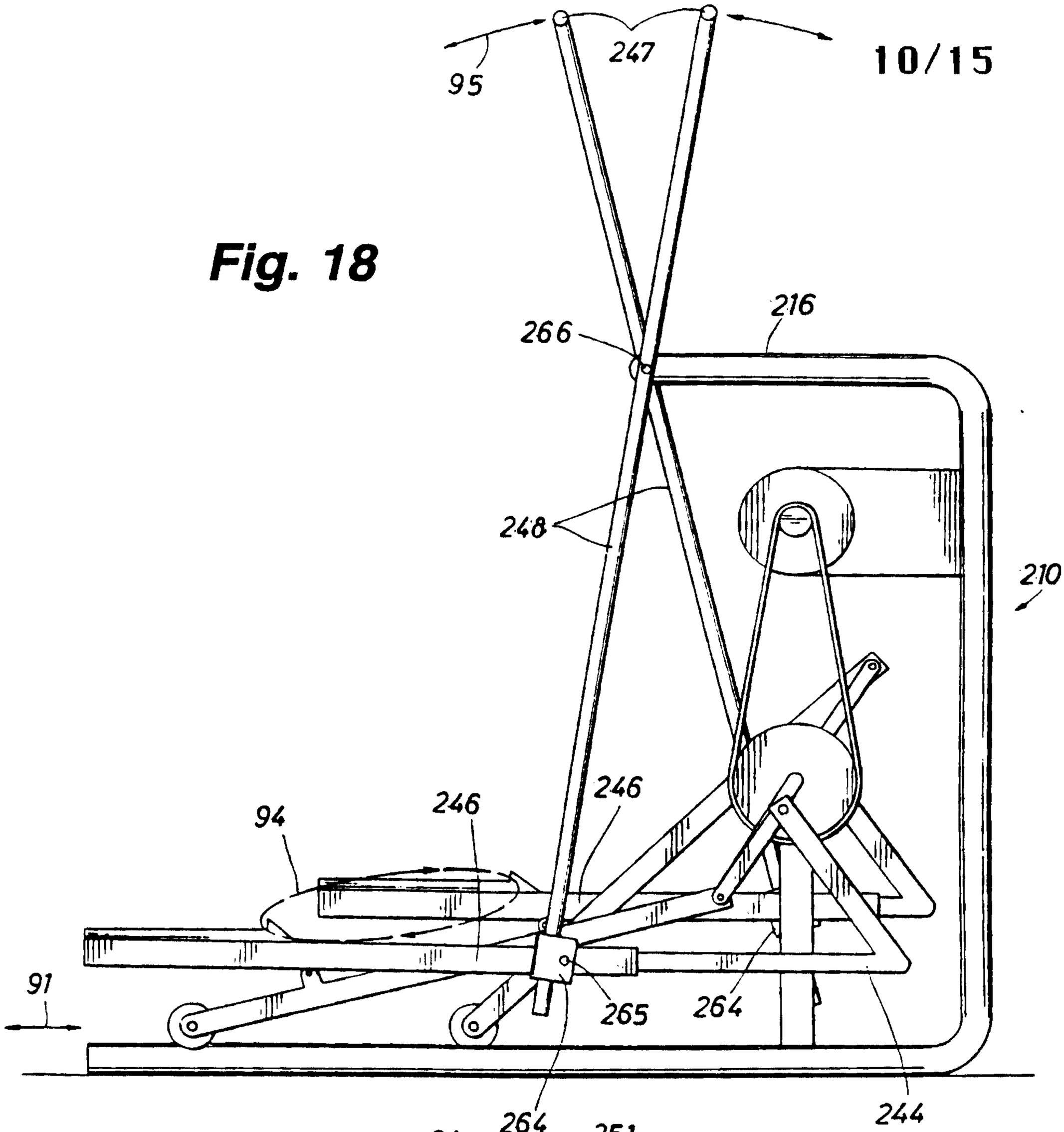

Fig. 18

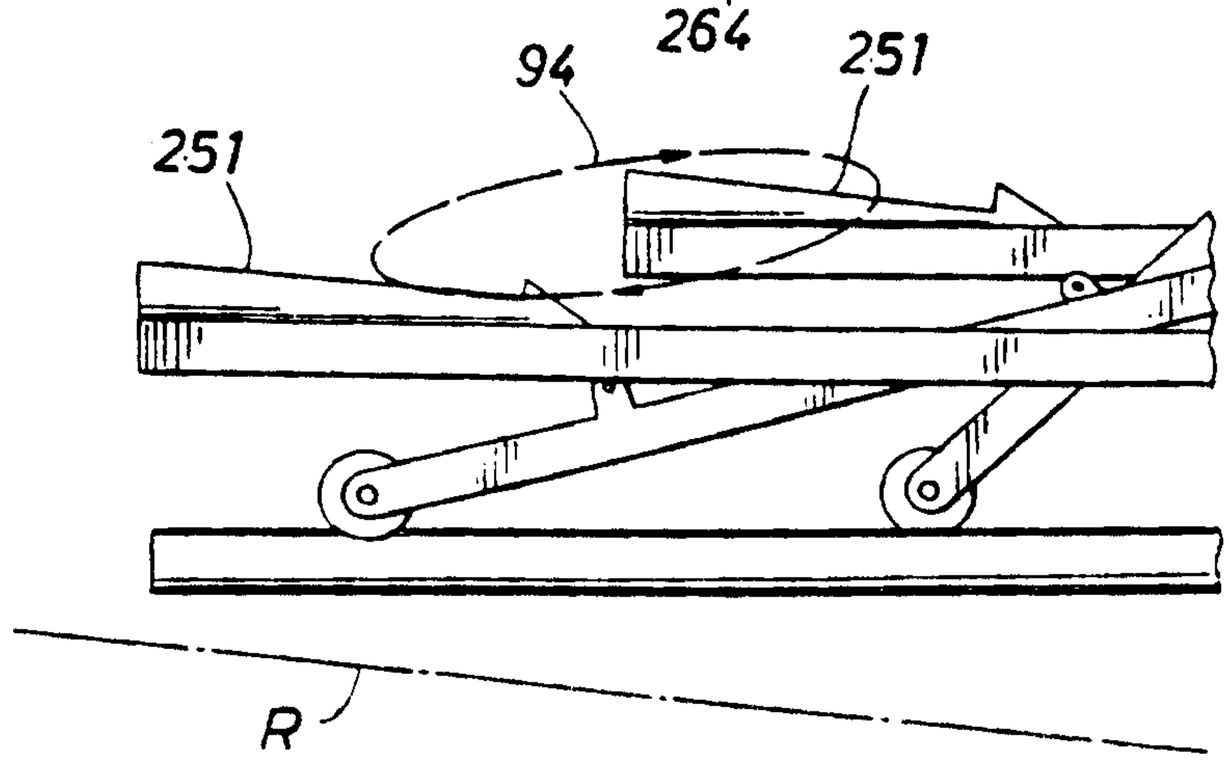

Fig. 19

Gowling Lafleur Henderson LLP

Fig. 20

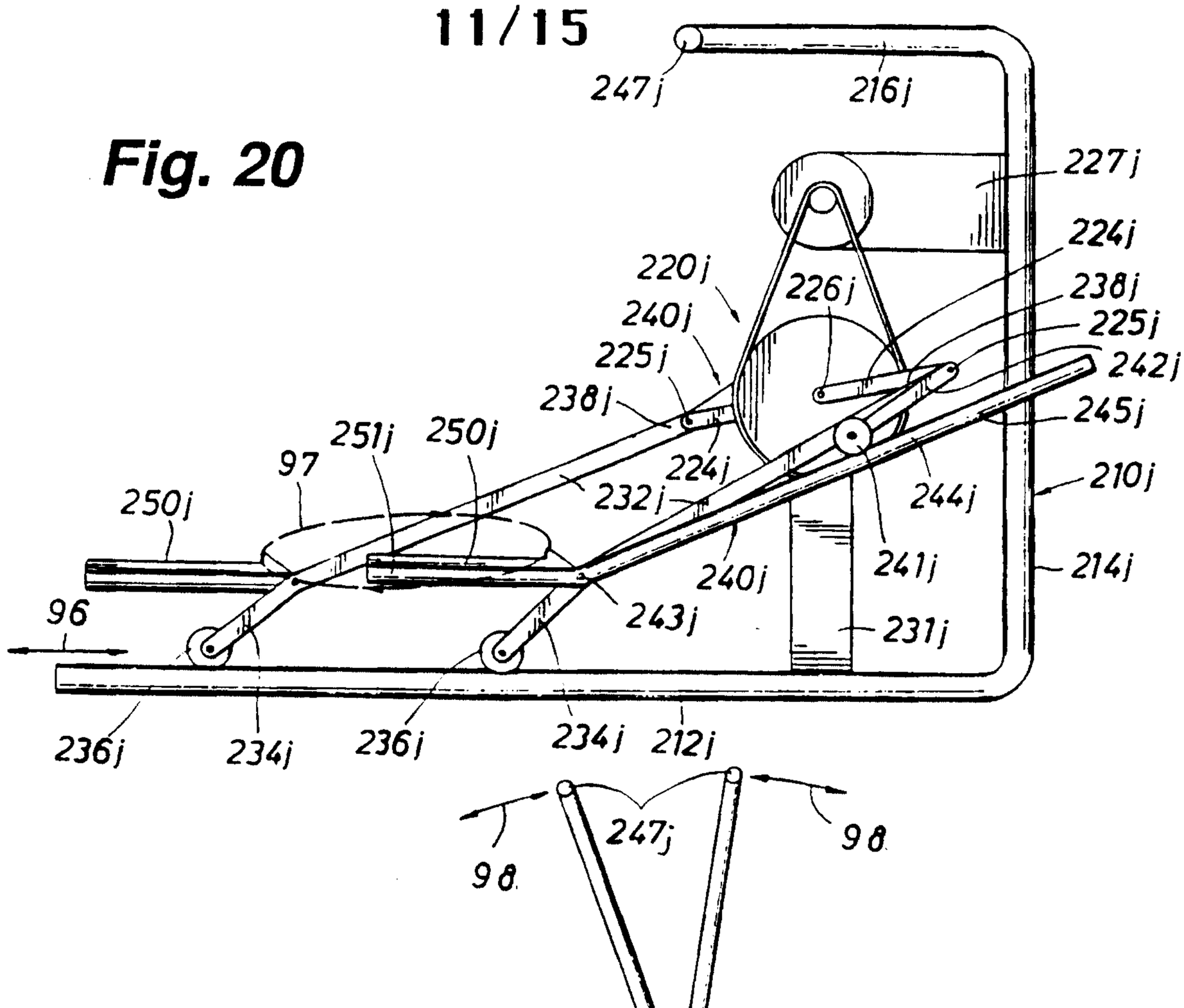
247j
216j
227j
224j
220j
226j
238j
240j
225j
225j
242j
238j
245j
251j
250j
97
224j
232j
244j
210j
250j
240j
241j
214j
96
243j
231j
236j
234j
236j
234j
212j
247j
98
98

Fig. 21

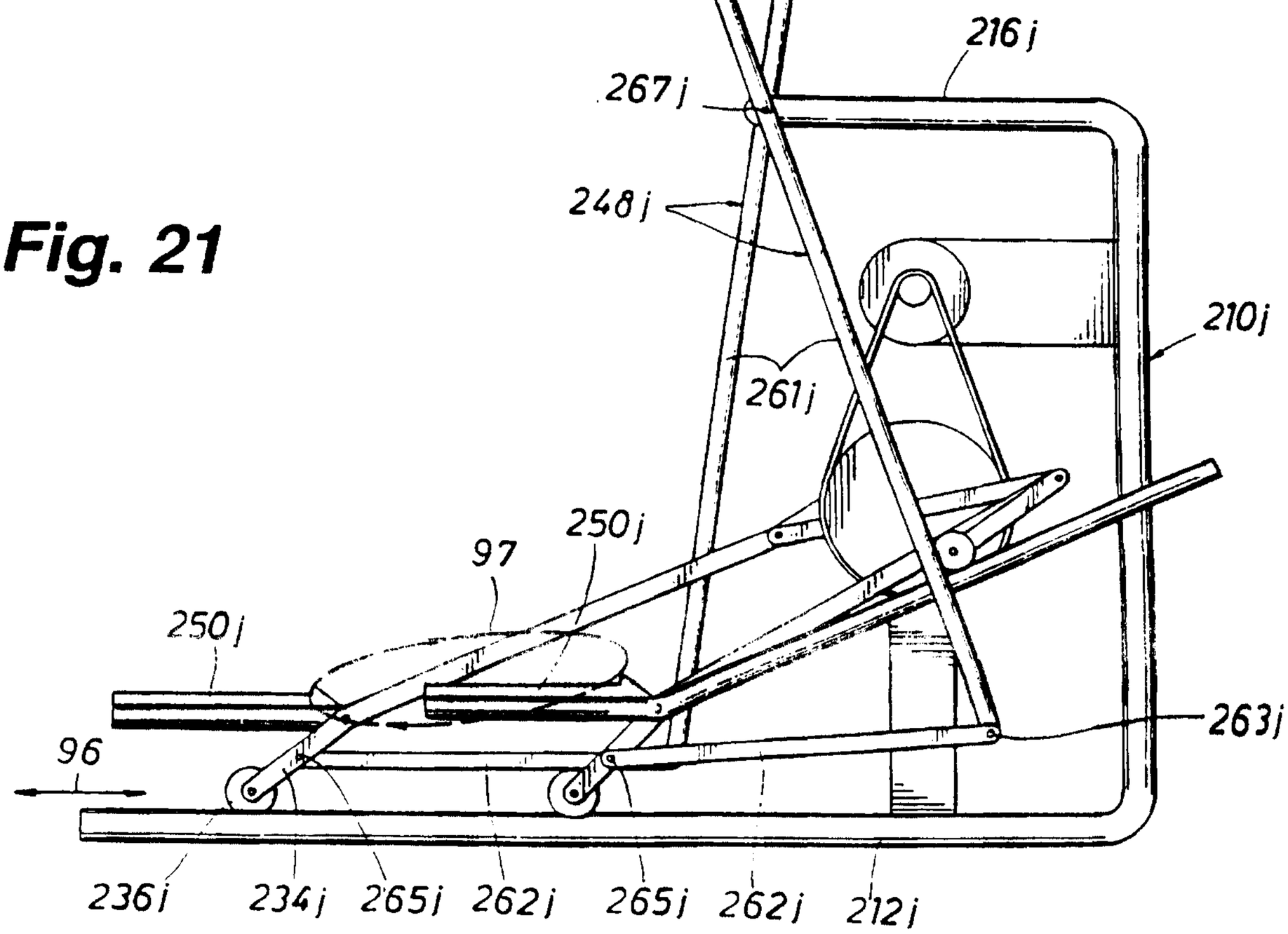
216j
267j
248j
210j
261j
250j
97
250j
263j
96
236j
234j
265j
262j
265j
262j
212j

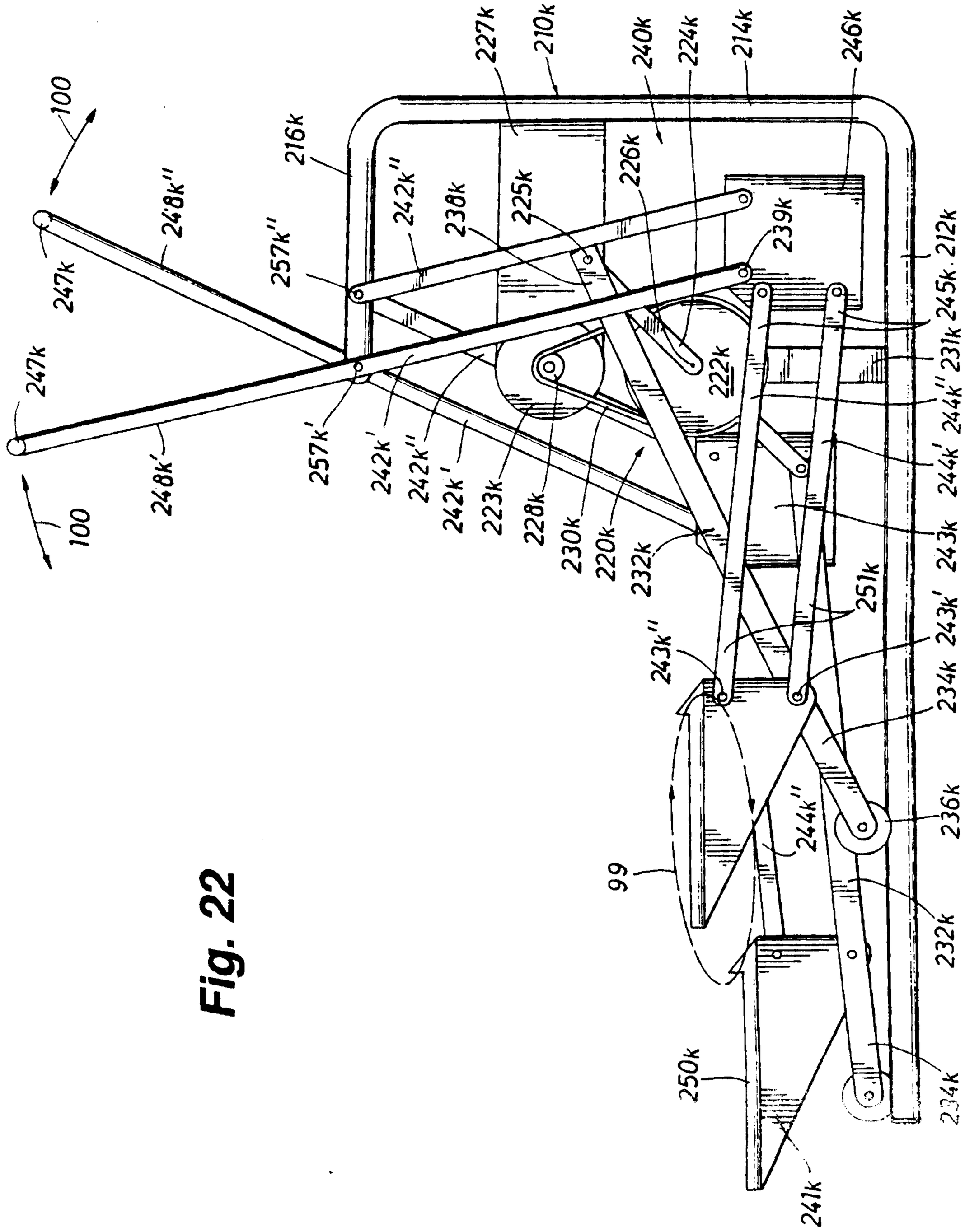
100
247k
248k''
216k
257k''
242k''
238k
225k
226k
240k
224k
214k
227k
210k
246k
239k
212k
245k
231k
244k''
244k'
243k
222k
247k
248k'
257k'
242k'
242k''
242k'
223k
228k
230k
220k
232k
100
251k
243k''
243k'
234k
236k
244k''
99
232k
250k
234k
241k

Fig. 22

Fig. 23

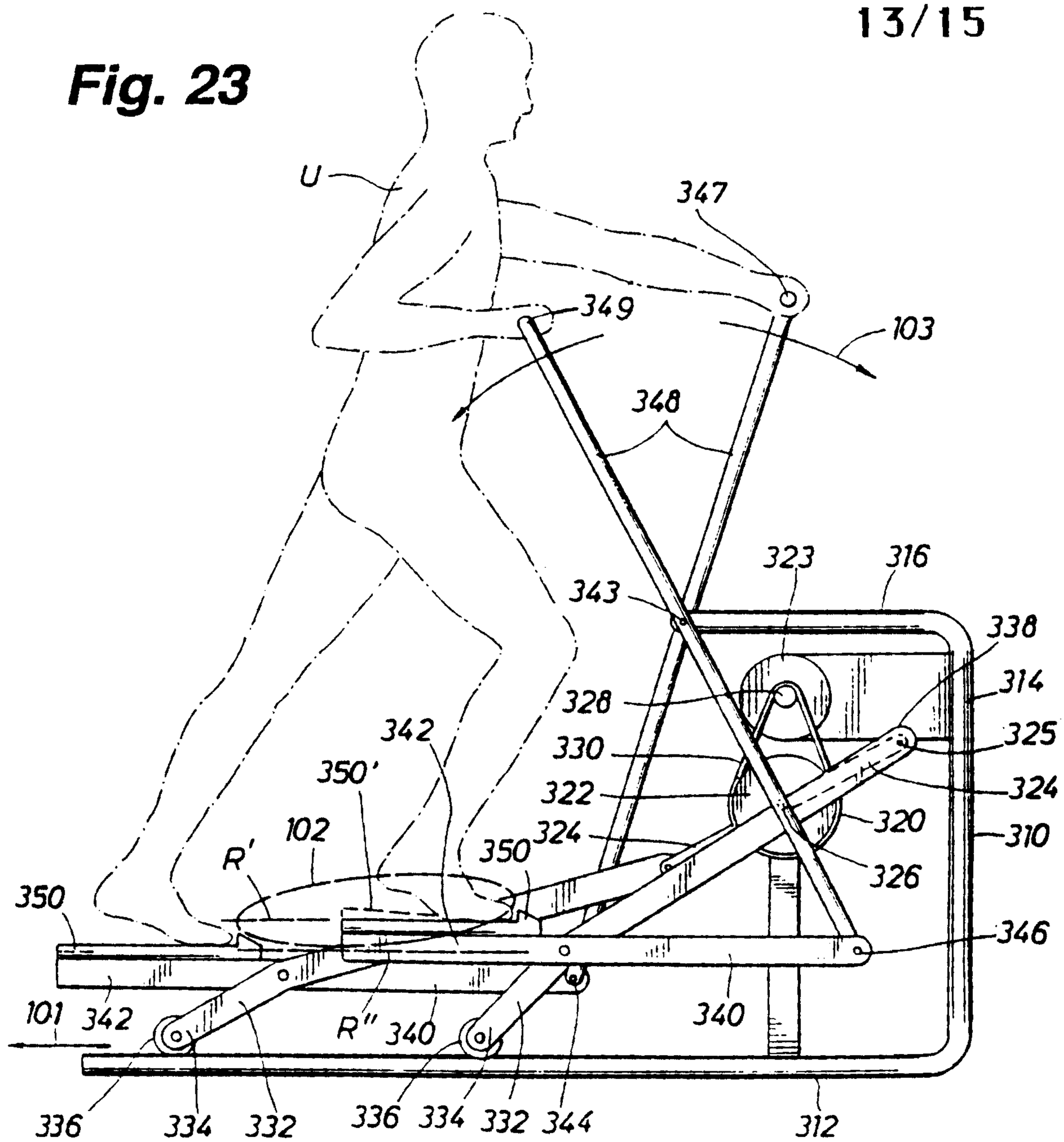
U
347
349
103
348
323
316
343
338
314
328
325
342
330
324
350'
322
320
102
324
310
R'
350
326
350
346
101
342
R''
340
340
336
334
332
336
334
332
344
312

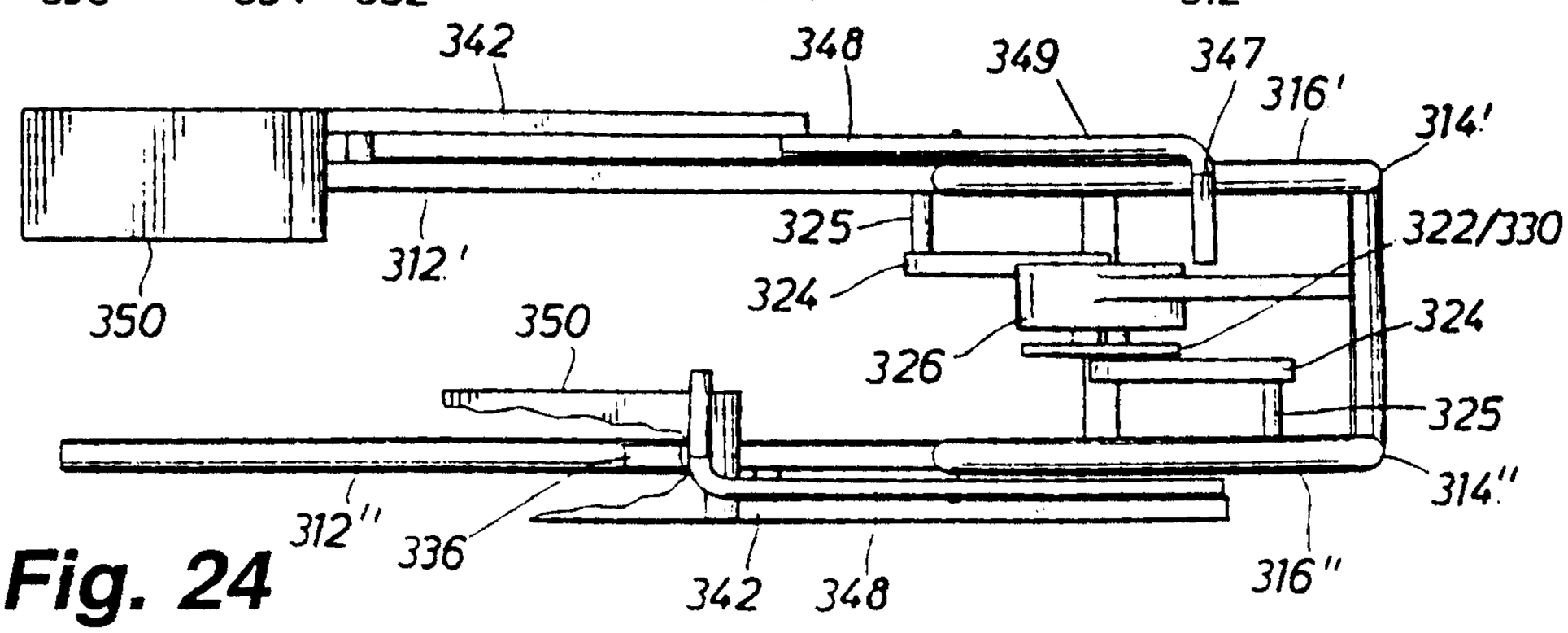
342
348
349
347
316'
314'
325
322/330
312'
324
350
350
324
326
325
314''
312''
336
342
348
316''

Fig. 24

Fig. 25a

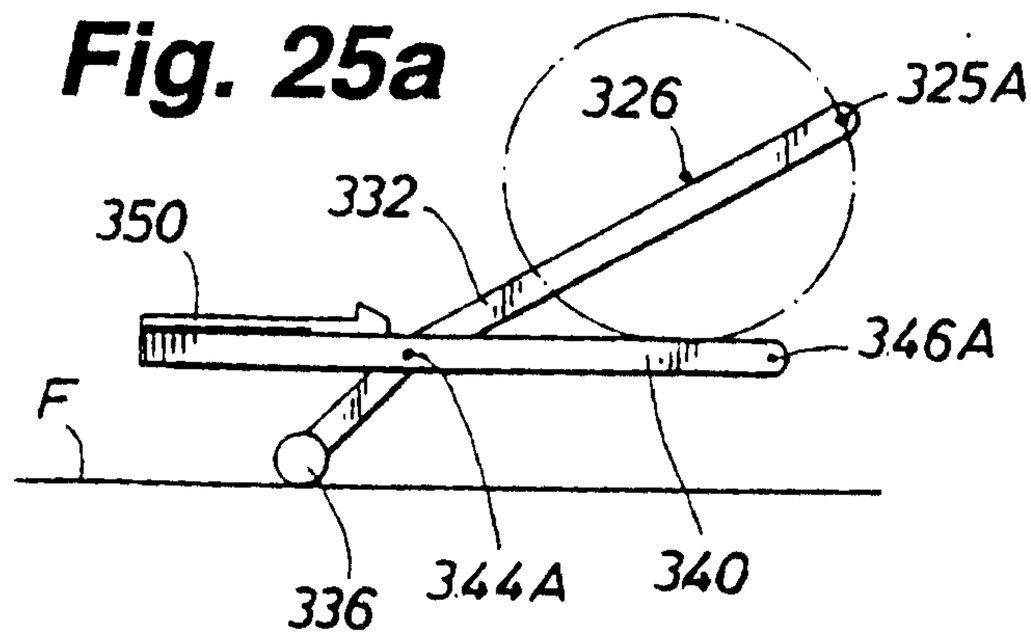

Fig. 25b

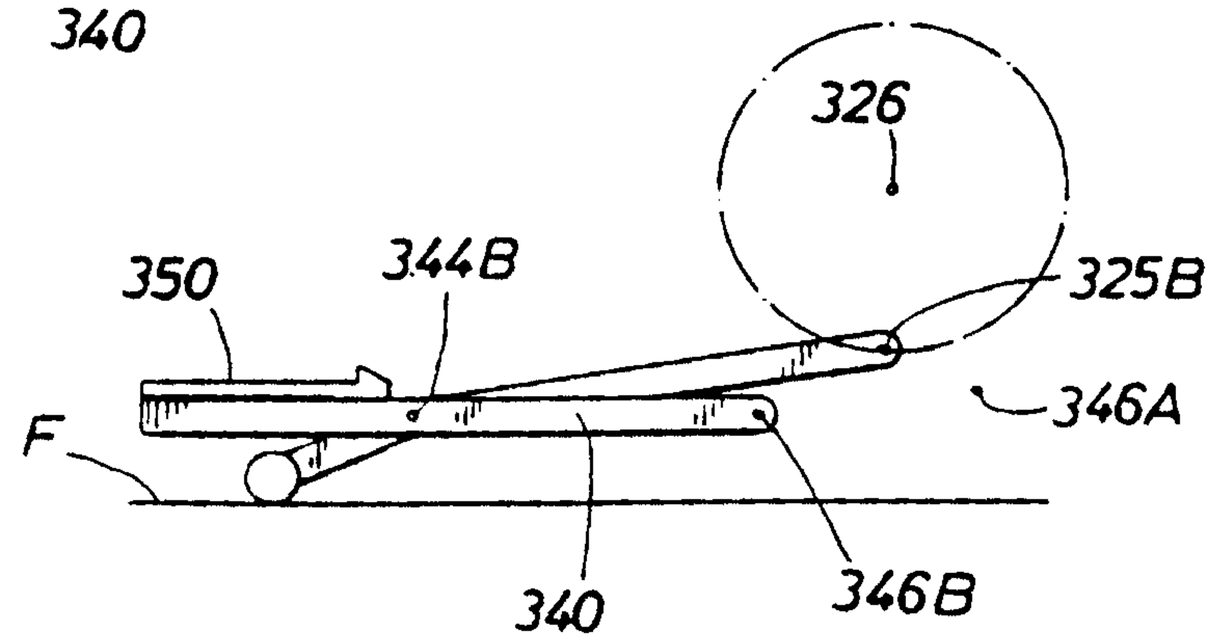

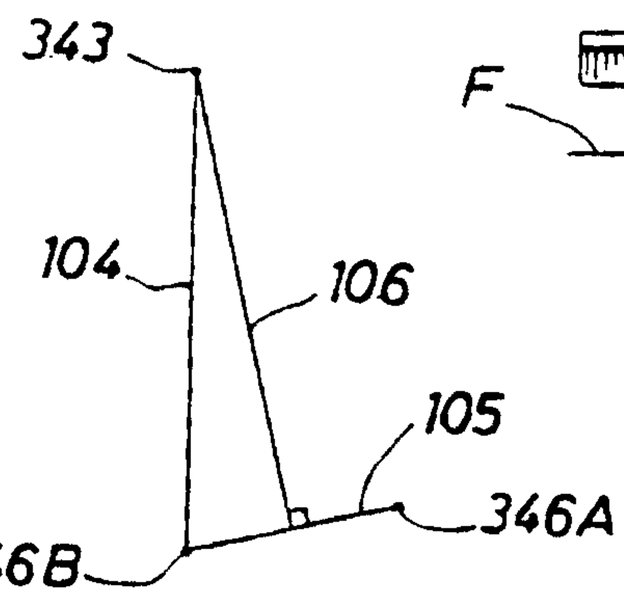

Fig. 25c

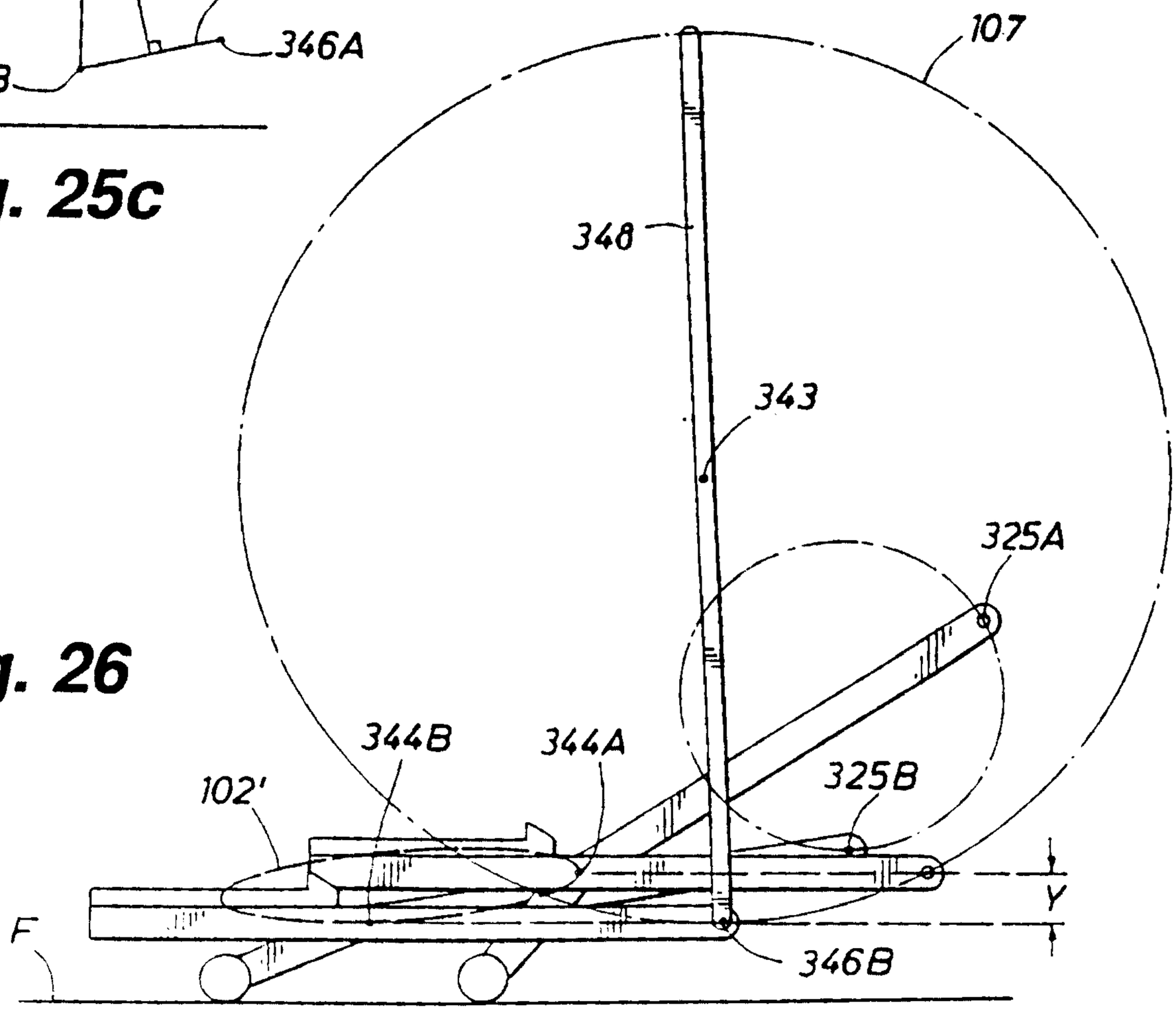

Fig. 26

Gowling Lafleur Henderson LLP

Fig. 27a

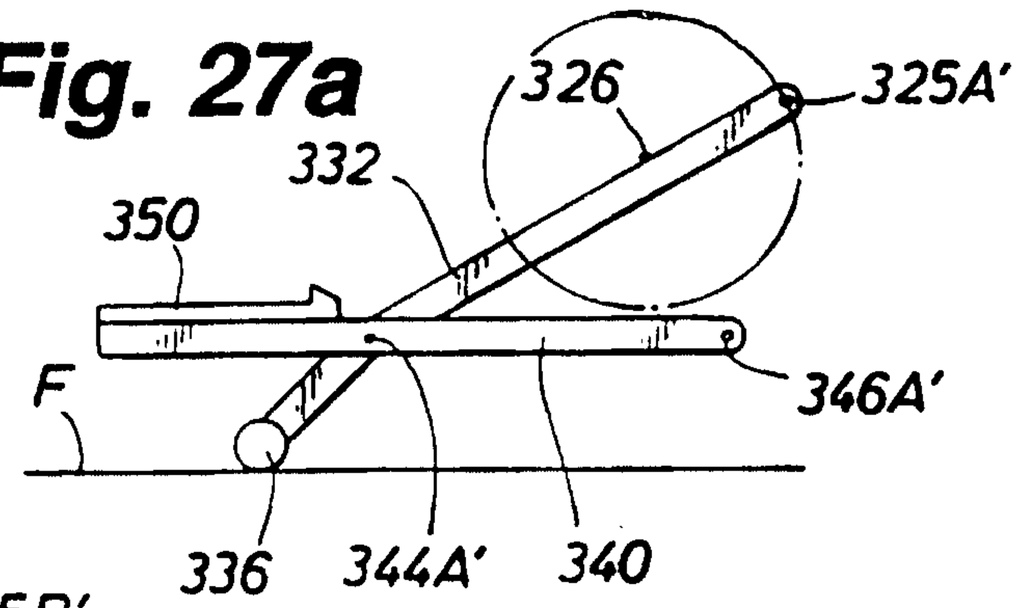

Fig. 27b

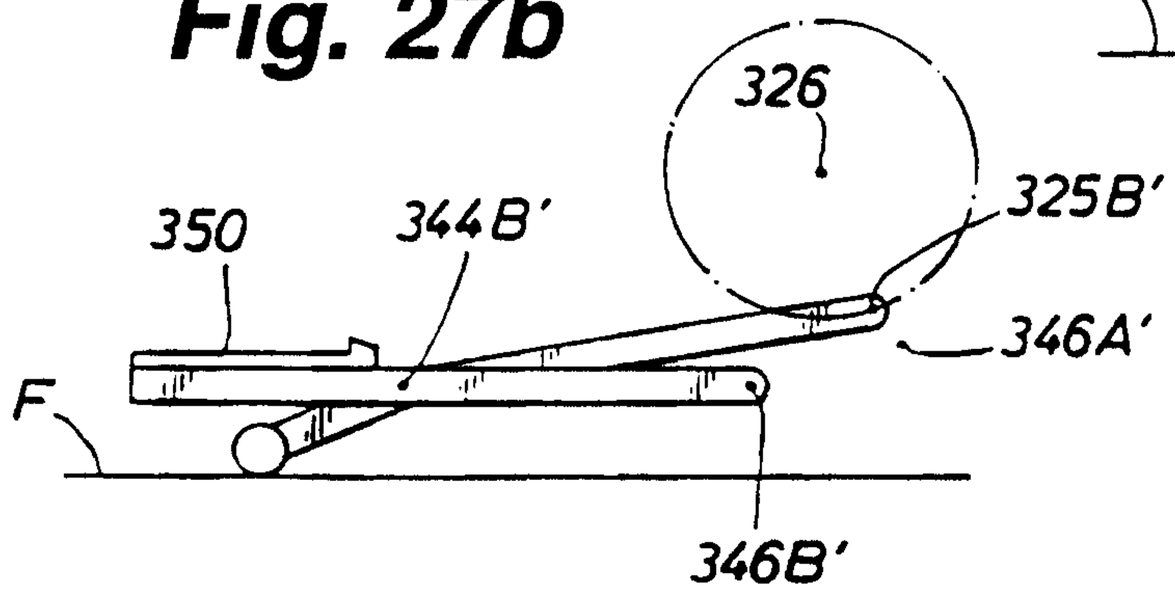

Fig. 27c

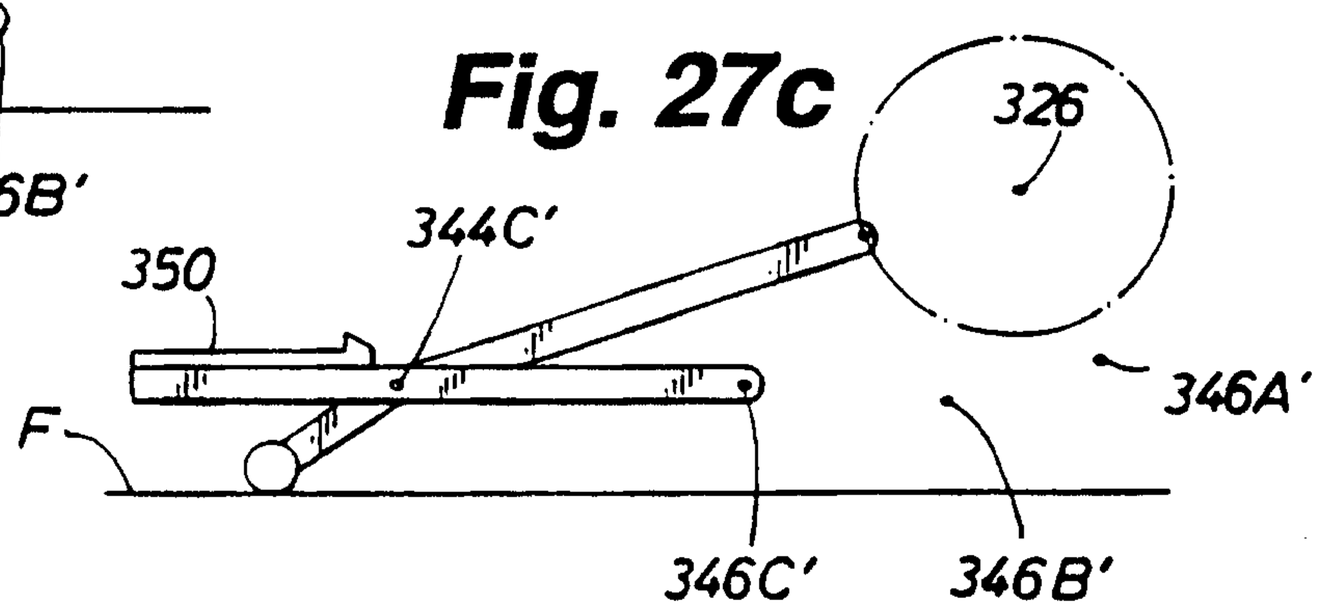

Fig. 27d

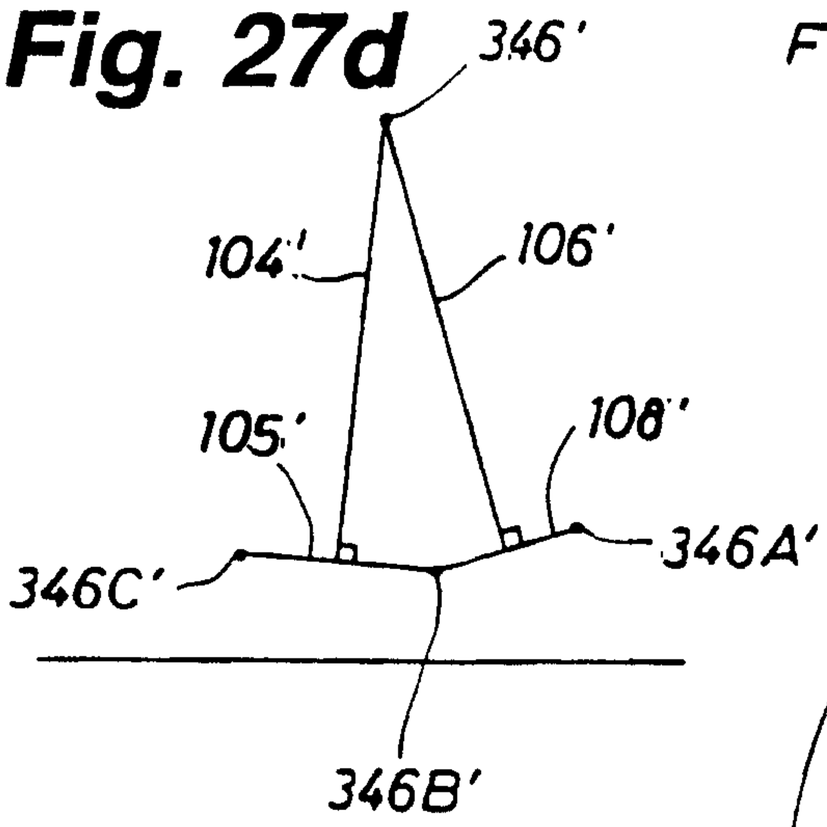

Fig. 28

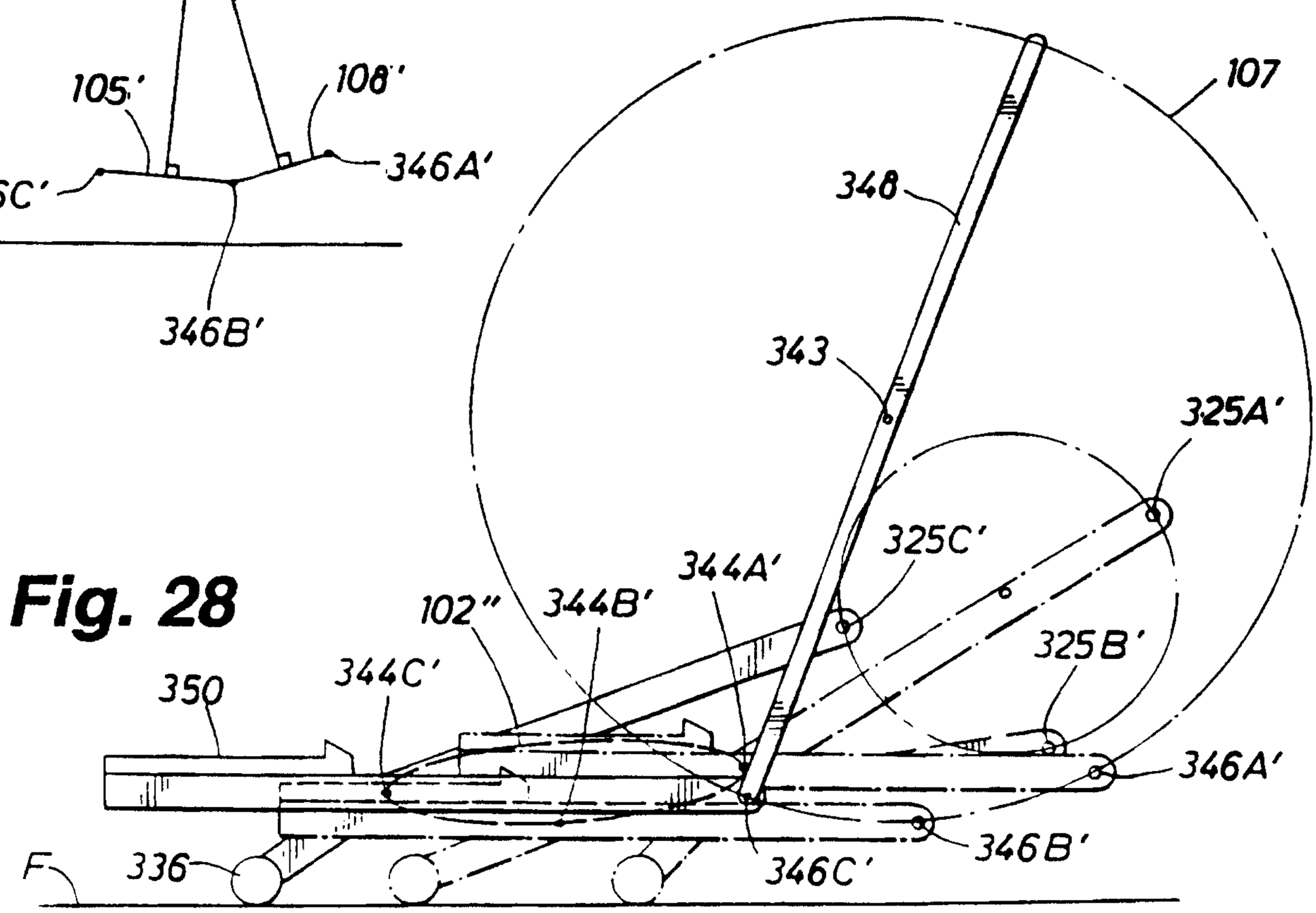

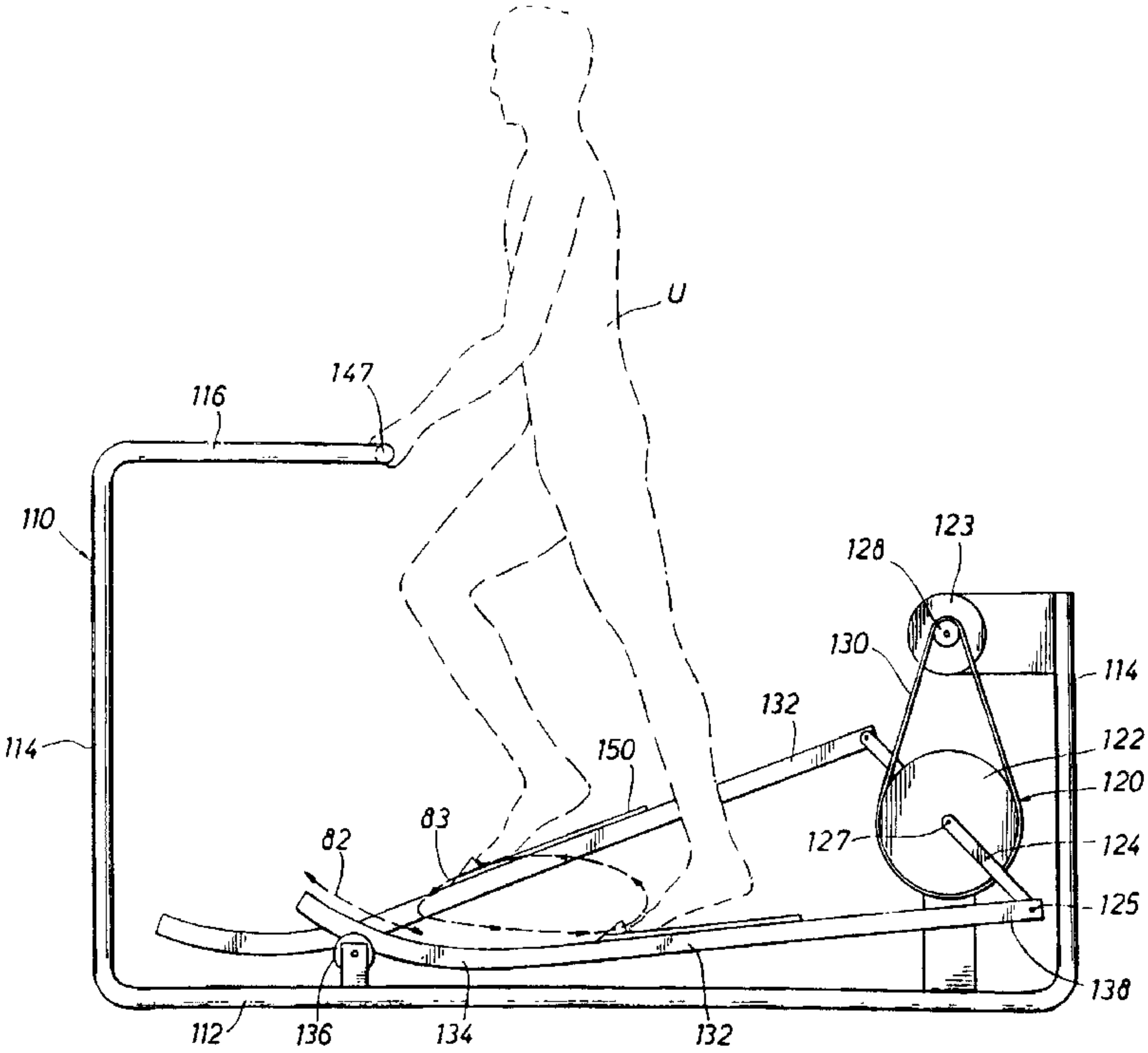
U
147
116
110
123
128
130
114
132
122
150
120
83
82
127
124
125
138
114
112
136
134
132