Aug. 1, 1933. S. J. MOLLET 1,920,424

INKING MECHANISM

Original Filed Feb. 28, 1929 2 Sheets-Sheet 1

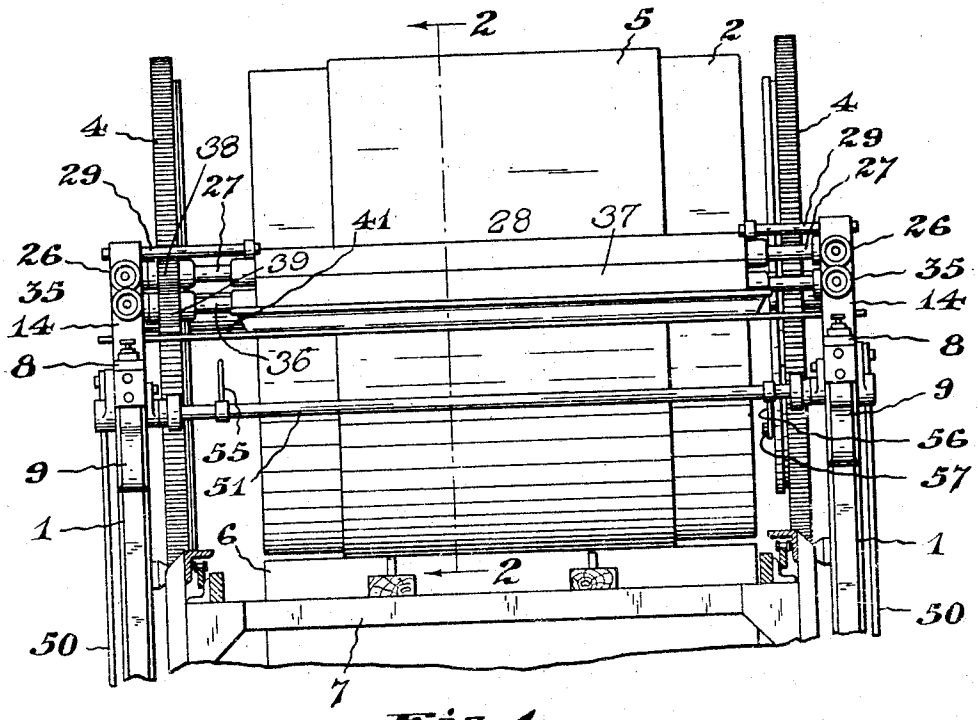

Fig. 1.

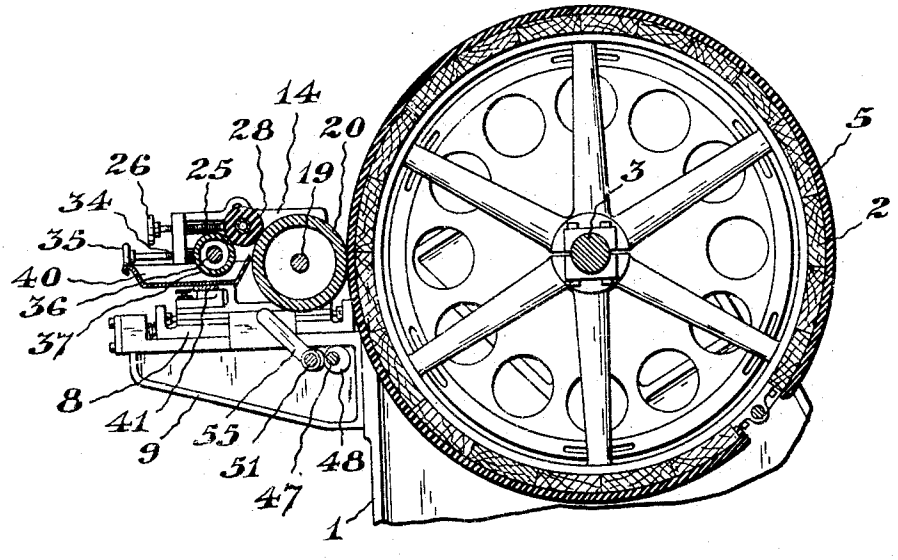

Fig. 2.

INVENTOR
Samuel J. Mollet

BY
Evans & McCoy
ATTORNEYS

Aug. 1, 1933. S. J. MOLLET 1,920,424

INKING MECHANISM

Original Filed Feb. 28, 1929 2 Sheets-Sheet 2

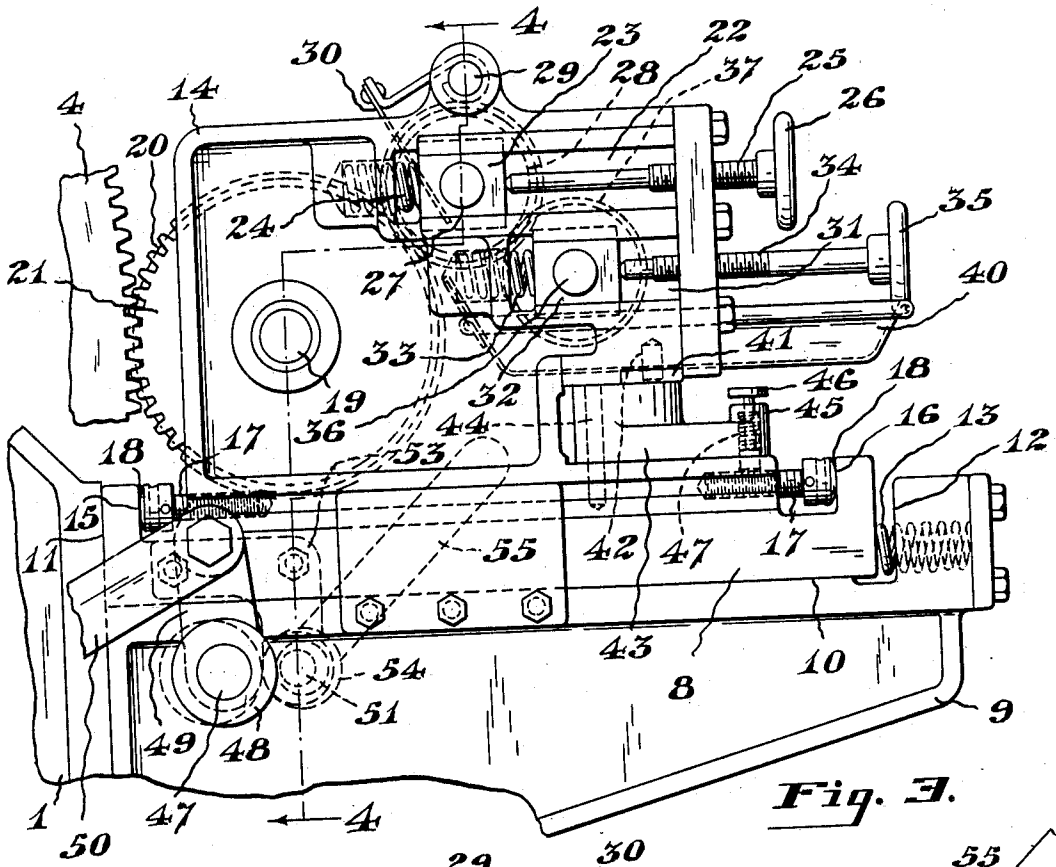

Fig. 3.

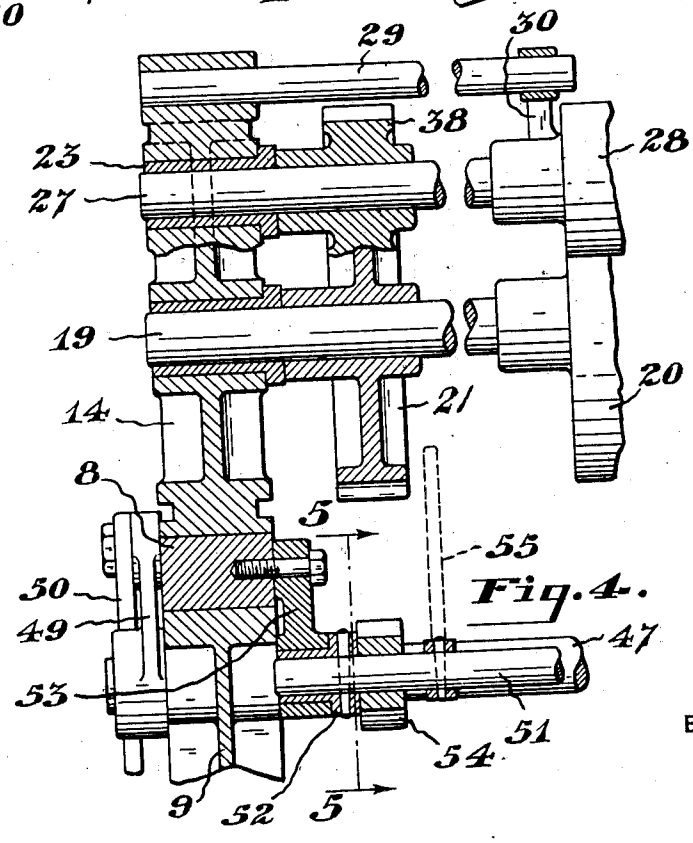

Fig. 4.

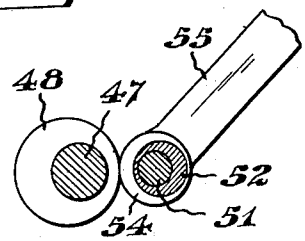

Fig. 5.

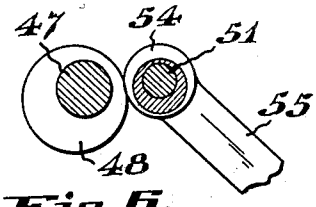

Fig. 6.

INVENTOR
Samuel J. Mollet

BY Evans & McCoy

ATTORNEYS

Patented Aug. 1, 1933

1,920,424

UNITED STATES PATENT OFFICE

1,920,424

INKING MECHANISM

Samuel J. Mollett, Massillon, Ohio

Original application February 28, 1929, Serial No. 343,523. Divided and this application June 27, 1930. Serial No. 464,158

6 Claims. (Cl. 101—351)

This invention relates to an inking mechanism for printing cylinders and more particularly to an inking mechanism for applying a paint or ink coating to a large cylinder suitable for printing signs such as used for roadside advertising purposes, the present invention being a division of application Serial No. 343,523, filed Feb. 28th, 1929.

In the machine disclosed in the application above referred to, there is provided a form cylinder of sufficient size to receive a form of the width and length of the sign to be printed. A compression cylinder bears against the form cylinder and a sheet feeding mechanism is provided for advancing the sheets to be printed in a straight line between the cylinders at a speed equal to the peripheral speed of the form cylinder so that a complete sign may be printed on the sheet during its passage between the cylinders.

The present invention has for an object to provide an inking mechanism which is adapted to apply a coating of ink or paint of uniform thickness over the surface of the form of the cylinder.

A further object is to provide an inking mechanism which may be adjusted to accurately regulate the feed of the ink or the paint to insure the transfer of a uniform coating to the form.

A further object is to provide an inking mechanism in which the pan containing the ink or paint delivered by the inking rollers to the printing cylinder may be quickly and easily removed or replaced.

With the above and other objects in view, the invention may be said to comprise the inking mechanism as illustrated in the accompanying drawings hereinafter described and particularly set forth in the appended claims, together with such variations and modifications thereof as will be apparent to one skilled in the art to which the invention appertains.

Reference should be had to the accompanying drawings forming a part of this specification in which:

Figure 1 is a fragmentary vertical section showing the form cylinder and inking mechanism in rear elevation.

Fig. 2 is a section taken on the line indicated at 2—2 in Fig. 1.

Fig. 3 is a side elevation of the inking mechanism.

Fig. 4 is a section taken on the line indicated at 4—4 in Fig. 3.

Fig. 5 is a fragmentary sectional view taken on the line indicated at 5—5 in Fig. 4 and showing the throwout device for the inking mechanism.

Fig. 6 is a view corresponding to Fig. 5 showing the throwout device in a different position of adjustment.

As shown in Figs. 1 and 2 of the drawings, the frame of the machine is provided with standards 1 which provide supports for a form cylinder 2 which is fixed to a transverse shaft 3 suitably journaled in the standards. The shaft 3 has fixed thereto adjacent its opposite ends, gears 4 which have a pitch diameter corresponding to the external diameter of the cylinder. The cylinder 2 has mounted thereon a suitable form 5 which is in the form of a flexible pad adapted to wrap around the cylinder and be rigidly attached to the periphery of the cylinder. The form 5 may be composed of a suitable flexible material such as a rubber composition and the letters or design of the sign to be printed are cut out of the form which receives a coating of ink or paint over its entire surface and applies this coating to the sheet being printed on, except at the points registering with cut-out portions of the form. For holding the sheet tightly against the form cylinder during the printing operation, a compression cylinder 6 is mounted beneath the form cylinder and in order to feed the sheet being printed upon between the cylinders, a suitable feed mechanism is provided on a horizontal supporting table 7.

The inking mechanism which applies a uniform coating of ink or paint to the surface of the form 5 is mounted for movement bodily toward and away from the rear side of the cylinder 2 and is supported on a carriage 8 which is mounted for sliding movement upon supporting brackets 9 which are attached to the rear edges of the standards 1. Each of the brackets 9 has a horizontal guideway 10 which extends in a direction longitudinally of the table 7 and the carriage 8 is movable between stop shoulders 11, formed by the rear edges of the standards 1 projecting above the brackets 9, and shoulders 12 at the outer ends of the brackets, the carriage being pressed toward and normally held against the shoulders 11 by means of coil springs 13 interposed between the shoulders 12 and the outer end of the carriage. A supporting frame 14 for the inking mechanism is adjustably mounted upon the carriage 8, the frame 14 being slidable on the carriage 8 between front and rear stop shoulders

15 and 16 and being adjustable by means of front and rear screws 17 adjustable in the frame 14 and having rounded heads 18 engageable with the shoulders 15 and 16. The heads 18 are adapted to receive a suitable tool for turning the screws and, by adjusting the screws, the frame 14 may be adjusted forwardly or rearwardly on the carriage 8.

Journaled in the frame 14, adjacent the front end thereof, there is a transverse shaft 19 which is in horizontal alinement with the shaft 3 supporting the form cylinder. The shaft 19 carries an inking roller 20, the surface of which lies closely adjacent to the surface of the form 5 on the cylinder 2. The shaft 19 also has fixed thereto a gear 21 which meshes with one of the large gears 4 of the form cylinder. The pitch circles of the gears 4 coincide with the cylindrical surface of the form and the pitch circle of the gear 21 coincides with the cylindrical surface of the roller 20 so that the peripheral speed of the roller 20 which is driven from the cylinder by the gears 4 and 21 is equal to the peripheral speed of the form cylinder.

Adjacent the top thereof, the frame 14 has horizontal slots 22 at the opposite sides thereof which form guideways for slidably mounted bearing blocks 23 which are pressed toward the outer ends of the slots by compression coil springs 24 which are interposed between the inner ends of the slots and the forward faces of the blocks 23. The rear faces of the blocks are engaged by the forward ends of screws 25 which have threaded engagement in openings in the frame 14 and these screws are provided at their rear ends with hand wheels 26 by means of which the screws may be advanced to move the blocks 23 forwardly in opposition to the springs 24. A transverse shaft 27 is journaled in the bearing blocks 23 and this shaft carries a roller 28 which co-operates with the roller 20, the roller 28 serving to apply a coating of ink or paint to the surface of the roller 20 which in turn applies a coating to the form 5. In the ends of the frame 44 above the shaft 27, there are mounted short shafts 29 which support scrapers 30 which engage the shoulders of the roller 28 to remove any paint or ink thereon.

Beneath the slots 28 are horizontal guide slots 31 in which are slidably mounted bearing blocks 32, the front faces of which bear against compression coil springs 33 seated in the frame 14 and the rear faces of which are engaged by the forward ends of screws 34 which are provided at their rear ends with hand wheels 35. By adjusting the screws 34, the bearing blocks 32 may be adjusted toward or away from the forward ends of the slots 31. Journaled in the bearing blocks 32, there is a transverse shaft 36 which carries a roller 37 which co-operates with the roller 28 to apply a coating of ink or paint thereto. A gear 38 fixed to the shaft 27 meshes with the gear 21 on the shaft 19 and a gear 39 fixed to the shaft 36 meshes with the gear 38 on the shaft 27. The pitch circles of the gears 38 and 39 coincide with the cylindrical surfaces of the rollers 38 and 37, so that the peripheral speed of the three inking rollers 20, 28 and 36 are equal. The lower portion of the roller 37 dips into paint or ink contained in a pan 40, supported beneath the roller, a portion of this paint or ink adheres to the surface of the roller 37, which applies a coating to the roller 38, which applies a coating to the roller 20, which in turn coats the form on the cylinder 2.

It will be apparent that the clearance between the surface of the form 5 and the surface of the roller 20 may be adjusted by means of the screws 17, that the clearance between the roller 28 and the roller 20 may be adjusted by the screws 25 and that the clearance between the rollers 37 and 28 may be adjusted by means of the screws 34. The thickness of the coating transferred from one roller to the next and from the large roller 20 to the form 5 is dependent upon the amount of clearance between the rollers and by means of the adjustments provided by the screws 17, 25 and 34, the clearance between the rollers can be very accurately regulated.

In order to obtain a uniform coating of the desired thickness on the form 5, the roller 20 is adjusted by means of the screws 17 to provide the desired clearance between the roller 20 and the form and the rollers 28 and 37 are then adjusted by means of the screws 25 and 34 to obtain the desired clearance between the rollers 28 and 20, and between the rollers 37 and 28. The clearance between successive rollers will decrease gradually toward the printing cylinder so that each roller will apply a coating of slightly less thickness than its own to the adjacent roller. During operation of the machine, the rollers may be adjusted to regulate the feed between adjacent rollers in such manner as to maintain a uniform coating on the roller 20 of sufficient depth to insure a uniform application of the ink or paint to the surface of the form. The slight relative adjustments of the rollers are not sufficient to move the gears out of intermeshing engagement and the gears which preferably have teeth of involute form will operate effectively in the different positions of adjustment. The only effect of the adjustments on the gears being to increase or decrease the angle of pressure between the interengaging teeth and to increase or decrease the amount of back lash which does not affect the operation of the gears in the present machine in which the gears are driven at uniform speed and in one direction only.

The ink pan 40 extends across the frame beneath the roller 37 and has attached to the bottom thereof, a longitudinal bar 41 which has upwardly extending dowel pins 42 which fit in sockets in an overhanging portion of the frame 14 to hold the pan against sliding or tilting movements. The ends of the bar 41 are supported upon swinging blocks 43 which are connected to the frame 14 by vertical pivots 44. The blocks 43 have rearwardly extending arms 45 which carry latch pins 46 which are yieldingly pressed downwardly by springs 47 and which engage in sockets formed in the frame 14 to hold the blocks 43 in supporting position. By releasing the latch pins 46, the blocks 43 may be swung outwardly from beneath the cross bar 41 to permit the pan to be lowered and removed from the frame. The ink pan may thus be quickly and easily removed whenever it is desired to clean or replace the pan as, for instance, when an ink or paint of a different color is to be employed. If desired, several pans may be provided and one pan substituted for another when desired.

The carriage 8 is normally held by the springs 13 in the position in which the gear 21 meshes with the adjacent gear 4 on the cylinder shaft, in which position the roller 20 is closely adjacent the surface of the form on the cylinder so that ink or paint will be transferred from the roller to the form. It is sometimes desirable to quickly disengage the inking mechanism from the printing cylinder and manually controlled means is

provided for shifting the carriage 8 away from the form cylinder to disengage the gears 4 and 20 and move the roller 20 away from the cylinder. To this end, a horizontal shaft 47 is journaled adjacent its ends in the brackets 9 and this shaft is provided adjacent each end with a suitable cam 48. An arm 49 is fixed to the shaft 47 and a link 50 extends forwardly from the arm 49 to a suitable operating mechanism (not shown), a second shaft 51 is mounted adjacent to and parallel with the shaft 47, the shaft 51 having eccentric bushings 52 fixed to the ends thereof which are journaled in bearing brackets 53 attached to the carriage 8. The shaft 51 has rollers 54 thereon which engage with the cams 48. Actuation of the shaft 47 by means of the link 50 and arm 49 forces the shaft 51 and the carriage 8, in which the shaft 51 is mounted, rearwardly to disengage the inking roller 20 from the cylinder. The shaft 51 has a hand lever 55 attached thereto by means of which the shaft 51 may be turned. The rotation of the eccentric bushings 52 and the bearing brackets 53 causes the shaft 51 to be shifted forwardly or rearwardly and the rollers 54 engaging the cams 48 cause the carriage 8 to be moved rearwardly in opposition to the springs 13. Thus, by actuating the shaft 51, the inking mechanism may be disengaged from the printing cylinder. The shaft 51 may also be provided with an arm 56 to which is connected a link 57 extending to the front end of the machine so that the inking mechanism may be disengaged, when desired, by an operator standing at the front of the machine.

It will be apparent that the present invention provides an inking mechanism which may be accurately adjusted to regulate the quantity of ink or paint delivered to the printing cylinder and which operates in such a manner as to insure the application of a coating of uniform thickness throughout the surface of the form.

Furthermore, it is to be understood that the particular form of apparatus shown and described, and the particular procedure set forth, are presented for purposes of explanation and illustration and that various modifications of said apparatus and procedure can be made without departing from my invention as defined in the appended claims.

What I claim is:

1. The combination with a form cylinder, of an inking mechanism comprising a frame, a plurality of ink transferring rollers journaled in the frame, one of the rollers being contiguous to the form cylinder, an ink pan in which one of said rollers operates, and means for detachably supporting the ink pan on the frame comprising pivoted supporting members, one at each end of said frame movable into and out of pan supporting position, and releasable means for holding said members in pan supporting position.

2. The combination with a form cylinder, of an inking mechanism comprising a frame, a plurality of ink transferring rollers journaled in the frame, one of the rollers being contiguous to the form cylinder, an ink pan in which one of said rollers operates, a bar attached to the bottom of the pan and projecting beyond the ends thereof, said bar having dowel pins at the ends thereof engageable with the frame, and movably mounted members at the ends of the frame engageable with said bars to releasably hold the dowel pins in engagement with the frame.

3. In a printing press, the combination with a form cylinder of a carriage mounted for movement toward and away from the form cylinder, a frame slidably mounted on the carriage for adjustment in the direction of movement of the carriage, inking mechanism mounted on said frame including a roller adjacent the form cylinder, means for adjusting the frame on said carriage, a fixed stop for limiting the movement of the carriage toward the form cylinder, springs acting on the carriage to hold the same against said stop, and manually controlled means for shifting the carriage in opposition to said spring.

4. In a printing press, the combination with a form cylinder, of a carriage mounted for movement toward and away from the form cylinder, a frame slidably mounted on the carriage for adjustment in the direction of movement of the carriage, a roller journaled in said frame at the end thereof adjacent the form cylinder, intermeshing gears fixed to the cylinder and roller, a second roller journaled in the frame adjacent to and parallel to the first, a gear fixed to the second roller and meshing with the gear of the first roller, a third roller journaled in the frame adjacent to and parallel with the second roller, a gear fixed to the third roller and meshing with the gear of the second roller, means for adjusting the second roller bodily forwardly or rearwardly in the frame to vary the clearance between the first and second roller, means for adjusting the third roller bodily forwardly or rearwardly in the frame to vary the clearance between the second and third rollers, means for adjusting said frame on the carriage to adjust the rollers as a unit and to vary the clearance between the first roller and the cylinder, and means for supplying ink to said third roller.

5. In a printing press, the combination with a form cylinder, of a carriage mounted for movement toward and away from the form cylinder, a frame slidably mounted on the carriage for adjustment in the direction of movement of the carriage, a roller journaled in the frame at the end thereof adjacent the form cylinder, intermeshing gears fixed to the cylinder and roller, superposed guide slots in said frame extending in the direction of movement of the carriage, bearing members slidably mounted in said slots, rollers journaled in said bearing members, gears fixed to the last mentioned rollers, one meshing with the gears of the other two rollers, means for adjusting said frame on said carriage to vary the clearance between the cylinder and the adjacent roller, and means for adjusting said bearing members in said slots to vary the clearance between the rollers.

6. In a printing press, the combination with a form cylinder of an inking mechanism comprising a roller contiguous to the cylinder, a second roller contiguous to the first and mounted rearwardly thereof, a third roller contiguous to the second roller and mounted rearwardly thereof, means for supplying ink to said third roller, means for driving the rollers each at a peripheral speed equal to that of the cylinder, means for independently adjusting the second and third rollers forwardly or rearwardly to vary the spaces between the peripheral surfaces of the first and second and second and third rollers, and means for adjusting the rollers as a unit toward and away from the cylinder to vary the space between the first roller and the surface of the cylinder.

SAMUEL J. MOLLET.