(12) INTERNATIONAL APPLICATION PUBLISHED UNDER THE PATENT COOPERATION TREATY (PCT)

(19) World Intellectual Property Organization
International Bureau

(43) International Publication Date
27 August 2020 (27.08.2020)

WIPO | PCT

(10) International Publication Number
WO 2020/168426 A1

(51) International Patent Classification:
B28C 7/16 (2006.01) *B28C 5/06* (2006.01)
B05B 7/04 (2006.01) *B28C 7/04* (2006.01)

(21) International Application Number:
PCT/CA2020/050214

(22) International Filing Date:
19 February 2020 (19.02.2020)

(25) Filing Language: English

(26) Publication Language: English

(30) Priority Data:
62/807,955 20 February 2019 (20.02.2019) US

(71) Applicant: **UNIVERSITÉ LAVAL** [CA/CA]; 2325 de l'Universite St., Quebec, Québec G1V 0A6 (CA).

(72) Inventors: **SICCARDI, Pierre**; 155 de Maisonneuve St. apt. 4, Quebec, Quebec G1R 2C5 (CA). **JOLIN, Marc**; 884 Cartier ave., Quebec, Quebec G1R 2R9 (CA). **JACOB-VAILLANCOURT, Thomas**; 1411 Charles ave., Quebec, Quebec G1S 4C6 (CA). **GAGNON, Antoine**; 60 Franklin St., Apt 3, Quebec, Québec G1K 2E9 (CA).

(74) Agent: **ROBIC**; 630 Rene-Levesque Blvd. West, 20th Floor, Montreal, Québec H3B 1S6 (CA).

(81) Designated States *(unless otherwise indicated, for every kind of national protection available)*: AE, AG, AL, AM, AO, AT, AU, AZ, BA, BB, BG, BH, BN, BR, BW, BY, BZ, CA, CH, CL, CN, CO, CR, CU, CZ, DE, DJ, DK, DM, DO, DZ, EC, EE, EG, ES, FI, GB, GD, GE, GH, GM, GT, HN, HR, HU, ID, IL, IN, IR, IS, JO, JP, KE, KG, KH, KN, KP, KR, KW, KZ, LA, LC, LK, LR, LS, LU, LY, MA, MD, ME, MG, MK, MN, MW, MX, MY, MZ, NA, NG, NI, NO, NZ, OM, PA, PE, PG, PH, PL, PT, QA, RO, RS, RU, RW, SA, SC, SD, SE, SG, SK, SL, ST, SV, SY, TH, TJ, TM, TN, TR, TT, TZ, UA, UG, US, UZ, VC, VN, WS, ZA, ZM, ZW.

(54) Title: SHOTCRETE NOZZLE ASSEMBLY AND STREAM CONTROLLING DEVICE THEREFOR

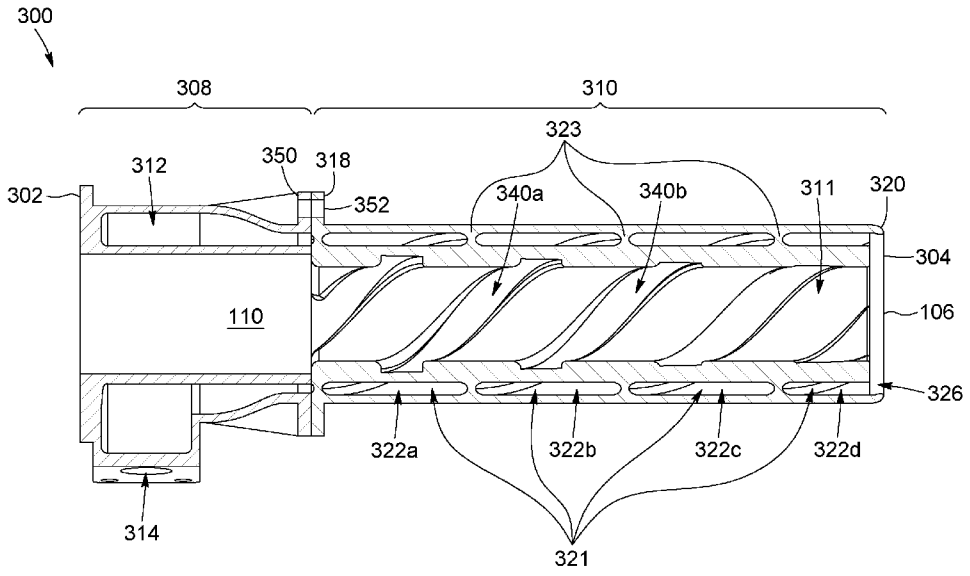

FIG. 10

(57) Abstract: A shotcrete nozzle assembly comprising: a tubular body operatively connectable to a concrete source, the tubular body including a stream controlling section for controlling a stream of fresh concrete projected from an outlet body end, the stream controlling section including at least one helicoidal conduit defined within the body sidewall, each helicoidal conduit extending helicoidally around a central conduit between an air inlet end operatively connectable to a pressurized air source and an air outlet end located towards the outlet body end, each helicoidal conduit being twisted around the central passageway to guide pressurized air exiting through the air outlet end along an helicoidal path extending away from the outlet body end and around the stream of fresh concrete exiting the outlet body end.

WO 2020/168426 A1

[Continued on next page]

(84) **Designated States** *(unless otherwise indicated, for every kind of regional protection available)*: ARIPO (BW, GH, GM, KE, LR, LS, MW, MZ, NA, RW, SD, SL, ST, SZ, TZ, UG, ZM, ZW), Eurasian (AM, AZ, BY, KG, KZ, RU, TJ, TM), European (AL, AT, BE, BG, CH, CY, CZ, DE, DK, EE, ES, FI, FR, GB, GR, HR, HU, IE, IS, IT, LT, LU, LV, MC, MK, MT, NL, NO, PL, PT, RO, RS, SE, SI, SK, SM, TR), OAPI (BF, BJ, CF, CG, CI, CM, GA, GN, GQ, GW, KM, ML, MR, NE, SN, TD, TG).

Declarations under Rule 4.17:

— *of inventorship (Rule 4.17(iv))*

Published:

— *with international search report (Art. 21(3))*

SHOTCRETE NOZZLE ASSEMBLY AND STREAM CONTROLLING DEVICE THEREFOR

TECHNICAL FIELD

The technical field generally relates to shotcrete, and more specifically to shotcrete nozzles and shotcrete nozzle assemblies, as well as to methods for applying shotcrete.

BACKGROUND

Shotcrete, also called gunite or sprayed concrete, refers to fresh concrete which is propelled onto a surface at relatively high velocity. More specifically, the term “fresh concrete” refers to concrete that is substantially unhardened such that it possesses enough of its original workability that it can be placed and consolidated onto the surface.

Shotcrete can be applied using different techniques. In one technique using “wet-mix” concrete, dry concrete ingredients, including but not limited to aggregate and cement, are pre-mixed with water to form the fresh concrete, which is provided through a hose to a nozzle coupled to a source of pressurized air which projects the fresh concrete from the nozzle. This technique therefore involves the storage and/or transport of fresh concrete, which may be expensive, complex, may require the use of cumbersome equipment such as a concrete mixer truck or may not be practical or possible.

In another technique known as “dry-mix” shotcrete, instead of the dry concrete ingredients being pre-mixed with water, water is mixed with the dry concrete ingredients at the nozzle to form the fresh concrete which is then propelled through the nozzle and out of the nozzle. This allows the concrete ingredients to be stored in dry form. In some instances, the concrete ingredients used in a dry-mix shotcrete process could still be pre-mixed with a relatively small quantity of water (e.g. about

3% to 5% of the total water used in the dry-mix shotcrete process) before entering the nozzle using a pre-wetting or pre-humidifying device located upstream of the nozzle.

Unfortunately, the nozzles used for dispensing dry-mix concrete may not properly mix the dry concrete ingredients with water. Furthermore, some particles of fresh concrete projected from the nozzle may not have the proper speed or energy to properly stick to the surface on which they are projected. This may cause the concrete particles to "rebound" on the surface, thereby leading to losses of material which may both be wasteful and relatively messy. Concrete particles – including both rebounded particles and sprayed particles – may further become suspended in air and thereby reduce the operator's visibility which may lead to a decrease in the quality of the work performed, as well as pose a health and/or safety risk for the operator. This may further cause concern to members of the public exposed to or witnessing concrete particles suspended in air during the application of shotcrete, which may contribute to reducing the overall social acceptability of this concrete application technique in public spaces.

SUMMARY

According to one aspect, there is provided a shotcrete nozzle assembly comprising: a tubular body having an open inlet body end, an open outlet body end and a body sidewall defining a central passageway extending between the inlet and outlet body ends, the inlet body end being operatively connectable to a concrete source for providing dry concrete ingredients through the central passageway, the tubular body including: a concrete wetting section extending from the inlet body end towards the outlet body end for mixing the dry concrete ingredients inside the central passageway with water to form fresh concrete; and a stream controlling section extending from the concrete wetting section to the outlet body end for controlling a stream of fresh concrete project-ed from the outlet body end, the stream controlling section including at least one helicoidal conduit

defined within the body sidewall and extending helicoidally around the central conduit between an air inlet end and an air outlet end located towards the outlet body end, the air inlet end being operatively connectable to a pressurized air source to force air through the helicoidal conduit and out the air outlet end, each helicoidal conduit being twisted around the central passageway to guide the pressurized air exiting through the air outlet end along an helicoidal path extending away from the outlet body end and around the stream of fresh concrete exiting the outlet body end.

In at least one embodiment, the at least one helicoidal air conduit includes a plurality of helicoidal air conduits.

In at least one embodiment, the plurality of helicoidal air conduits includes between two and eight helicoidal air conduits.

In at least one embodiment, the plurality of helicoidal air conduits includes four helicoidal air conduits.

In at least one embodiment, the conduit inlets of the helicoidal air conduits are angularly offset relative to each other around the central passageway by an angular offset angle of 90 degrees relative to each other.

In at least one embodiment, the helicoidal air conduits are angularly offset relative to each other around the central passageway.

In at least one embodiment, the helicoidal air conduits extend between the air inlet end and an air outlet end while remaining equidistant to each other.

In at least one embodiment, all the helicoidal air conduits have a substantially similar size and shape.

In at least one embodiment, the body sidewall further includes an inner face facing inwardly towards the central passageway, the inner face including a mixing portion configured for mixing the fresh concrete passing through the central passageway.

In at least one embodiment, the mixing portion includes at least one helicoidal mixing recess defined in the inner face.

In at least one embodiment, the mixing portion extends along an entire length of the stream controlling section.

In at least one embodiment, the mixing portion extends between an inlet mixing portion end located at an inlet con-trolling section end of the stream controlling section and an outlet mixing portion end located partway between the inlet stream controlling section end and an outlet stream controlling section end of the stream controlling section, the body sidewall further comprising an outlet end portion extending between the outlet mixing portion end and the outlet stream controlling section end, the outlet end portion having a substantially smooth inner surface.

In at least one embodiment, the stream controlling section further includes a stream accelerating portion extending away from the outlet end for accelerating the stream of fresh concrete and the air exiting the nozzle tip portion.

In at least one embodiment, the stream accelerating portion includes a proximal accelerating portion end located at the outlet body end, a distal accelerating portion end located away from the proximal accelerating portion end and an accelerating portion peripheral sidewall extending between the proximal and distal accelerating portion ends, the accelerating portion peripheral sidewall defining a central accelerating conduit extending coaxially to the central passageway, the central accelerating conduit tapering from the proximal accelerating portion end to the distal accelerating portion end.

In at least one embodiment, the stream accelerating portion is removable from the body sidewall.

In at least one embodiment, the stream controlling section includes an air accelerating portion for accelerating the air passing through the at least one helicoidal conduit.

In at least one embodiment, the at least one helicoidal air conduits are isolated from the central passageway.

In at least one embodiment, the stream controlling section further includes an air inlet manifold having an annular manifold inner conduit in fluid communication with the at least one helicoidal air conduit to distribute the air from the pressurized air source towards all of the at least one helicoidal air conduit.

In at least one embodiment, the air manifold further includes an air inlet opening operatively connected to the pressurized air source, the air inlet opening defining a manifold opening axis, the air inlet opening being positioned such that the manifold opening axis is offset relative to the center of the central passageway and extends generally tangentially relative to the central passageway so as to guide the air from the pressurized air source into the air manifold in a tangential direction relative to the central passageway.

According to another aspect, there is also provided a stream controlling device for controlling a stream of fresh concrete projected from a shotcrete nozzle assembly, the shotcrete nozzle assembly being operatively connectable to a fresh concrete source, the device comprising: a tubular body having an open inlet body end, an open outlet body end and a body sidewall defining a central passageway extending between the inlet and outlet body ends, the inlet body end being operatively connectable to the shotcrete nozzle assembly for providing the fresh concrete through the central passageway and out of the outlet body end, the tubular body further including at least one helicoidal conduit defined within the body sidewall and extending helicoidally around the central conduit between an air inlet end and an air outlet end coinciding with the outlet body end, the air inlet end being operatively connectable to a pressurized air source to force air through the helicoidal conduit, each helicoidal conduit being twisted around the central passageway to guide the pressurized air exiting through the air outlet end along an helicoidal path extending out from the outlet body end and around the stream of fresh concrete exiting the outlet body end.

In at least one embodiment, the at least one helicoidal air conduit includes a plurality of helicoidal air conduits.

In at least one embodiment, the plurality of helicoidal air conduits includes between two and eight helicoidal air conduits.

In at least one embodiment, the plurality of helicoidal air conduits includes four helicoidal air conduits.

In at least one embodiment, the conduit inlets of the helicoidal air conduits are angularly offset relative to each other around the central passageway by an angular offset angle of 90 degrees relative to each other.

In at least one embodiment, the helicoidal air conduits are angularly offset relative to each other around the central passageway.

In at least one embodiment, the helicoidal air conduits extend between the air inlet end and an air outlet end while remaining equidistant to each other.

In at least one embodiment, all the helicoidal air conduits have a substantially similar size and shape.

In at least one embodiment, the body sidewall further includes an inner face facing inwardly towards the central passageway, the inner face including a mixing portion configured for mixing the fresh concrete passing through the central passageway.

In at least one embodiment, the mixing portion includes at least one helicoidal mixing recess defined in the inner face.

In at least one embodiment, the mixing portion extends along an entire length of the tubular body.

In at least one embodiment, the mixing portion extends between an inlet mixing portion end located at the inlet body end of the tubular body and an outlet mixing portion end located partway between the inlet and outlet body ends, the body sidewall further comprising an outlet end portion extending between the outlet

mixing portion end and the outlet body end, the outlet end portion having a substantially smooth inner surface.

In at least one embodiment, the assembly further comprises a stream accelerating portion extending away from the outlet body end for accelerating the stream of fresh concrete and the air exiting the tubular body.

In at least one embodiment, the stream accelerating portion includes a proximal accelerating portion end located at the outlet body end, a distal accelerating portion end located away from the proximal accelerating portion end and an accelerating portion peripheral sidewall extending between the proximal and distal accelerating portion ends, the accelerating portion peripheral sidewall defining a central accelerating conduit extending coaxially to the central passageway, the central accelerating conduit tapering from the proximal accelerating portion end to the distal accelerating portion end.

In at least one embodiment, the stream accelerating portion is removable from the body sidewall.

In at least one embodiment, the assembly further comprises an air accelerating portion for accelerating the air passing through the at least one helicoidal conduit.

In at least one embodiment, the at least one helicoidal air conduits are isolated from the central passageway.

In at least one embodiment, the assembly further comprises an air inlet manifold having an annular manifold inner conduit in fluid communication with the at least one helicoidal air conduit to distribute the air from the pressurized air source towards all of the at least one helicoidal air conduit.

In at least one embodiment, the air manifold further includes an air inlet opening operatively connected to the pressurized air source, the air inlet opening defining a manifold opening axis, the air inlet opening being positioned such that the manifold opening axis is offset relative to the center of the central passageway and extends generally tangentially relative to the central passageway so as to guide

the air from the pressurized air source into the air manifold in a tangential direction relative to the central passageway.

According to yet another aspect, there is also provided a method for applying shotcrete on a surface, the method comprising: dispensing fresh concrete from a shotcrete nozzle assembly towards the surface to form a stream of fresh concrete; directing pressurized air along a helicoidal airflow path twisting around the stream of fresh concrete to thereby accelerate a plurality of fresh concrete particles located in an outer layer of the stream of fresh concrete.

In at least one embodiment, dispensing the fresh concrete includes dispensing the fresh concrete through a central passageway of the shotcrete nozzle assembly.

In at least one embodiment, dispensing the fresh concrete includes dispensing dry concrete ingredients through the central passageway and wetting the dry concrete ingredients passing through the shotcrete nozzle assembly.

In at least one embodiment, directing pressurized air along a helicoidal airflow includes guiding air through at least one helicoidal air conduit defined in a body sidewall extending peripherally around the central passageway.

In at least one embodiment, the method further comprises, before directing the pressurized air along the helicoidal airflow, operatively connecting an air inlet of the shotcrete nozzle assembly to a pressurized air source, the air inlet being in fluid communication with the at least one helicoidal air conduits.

BRIEF DESCRIPTION OF THE DRAWINGS

FIG. 1 is a perspective view of a shotcrete nozzle assembly, in accordance with one embodiment, with a water control valve and an air control valve operatively connected to the assembly;

FIG. 2 is a longitudinal cross-section view of the shotcrete nozzle assembly illustrated in FIG. 1;

FIG. 3 is a longitudinal cross-section view of a concrete wetting section of the shotcrete nozzle assembly illustrated in FIG. 1;

FIG. 4A is a top perspective view of an inner tube for the concrete wetting section illustrated in FIG. 3;

FIG. 4B is another top perspective view of an inner tube for the concrete wetting section illustrated in FIG. 3, with the outline of water dispensing bores extending through the inner tube's sidewall and of annular grooves defined inside the inner tube shown in broken lines;

FIG. 5 is an end elevation view of the inner tube illustrated in FIG. 4, showing projected central bore axes formed by an orthogonal projection of the central bore axes on a transversal plane;

FIG. 6A is a longitudinal cross-section view of the inner tube illustrated in FIG. 4;

FIG. 6B is an enlarged portion of the longitudinal cross-section view of the inner tube illustrated in FIG. 6A;

FIG. 7 is a longitudinal cross-section view of a concrete wetting section for a shotcrete nozzle assembly, in accordance with another embodiment;

FIG. 8 is a longitudinal cross-section view of an inner tube for the concrete wetting section illustrated in FIG. 7;

FIG. 9 is a side elevation view of a stream controlling section of the shotcrete nozzle assembly illustrated in FIG. 1;

FIG. 10 is a longitudinal cross-section view, taken along section line A-A, of the stream controlling section illustrated in FIG. 9;

FIG. 11 is a transversal cross-section view, taken along section line B-B, of the stream controlling section illustrated in FIG. 9, showing the interior of the air inlet manifold;

FIG. 12 is a transversal cross-section view, taken along section line C-C, of the stream controlling section illustrated in FIG. 9, showing the air inlet ends of the four helicoidal air conduits disposed around the central passageway;

FIG. 13 is a longitudinal cross-section view of a stream controlling section for a shotcrete nozzle assembly, in accordance with another embodiment;

FIG. 14 is a longitudinal cross-section view of a stream controlling section for a shotcrete nozzle assembly, in accordance with yet another embodiment; and

FIG. 15 is a longitudinal cross-section view of a stream controlling section for a shotcrete nozzle assembly, in accordance with yet another embodiment.

DETAILED DESCRIPTION

It will be appreciated that, for simplicity and clarity of illustration, where considered appropriate, reference numerals may be repeated among the figures to indicate corresponding or analogous elements or steps. In addition, numerous specific details are set forth in order to provide a thorough understanding of the exemplary embodiments described herein. However, it will be understood by those of ordinary skill in the art, that the embodiments described herein may be practiced without these specific details. In other instances, well-known methods, procedures and components have not been described in detail so as not to obscure the embodiments described herein. Furthermore, this description is not to be considered as limiting the scope of the embodiments described herein in any way but rather as merely describing the implementation of the various embodiments described herein.

For the sake of simplicity and clarity, namely so as to not unduly burden the figures with several references numbers, not all figures contain references to all the components and features, and references to some components and features may be found in only one figure, and components and features of the present disclosure which are illustrated in other figures can be easily inferred therefrom. The

embodiments, geometrical configurations, materials mentioned and/or dimensions shown in the figures are optional, and are given for exemplification purposes only.

Moreover, it will be understood that the terms “longitudinal” and “longitudinally” are used herein as a positional term in reference to a longitudinal passageway axis of a central passageway of a shotcrete nozzle assembly’s tubular body. It will thus further be understood that the terms “transverse” and “transversely” refer to a direction which is generally orthogonal (i.e. normal) to the longitudinal passageway axis.

Furthermore, it will also be understood that the term “orthogonal projection” of an axis on a plane refers to the projection of the axis along projection lines which are parallel to each other and which are perpendicular to the plane on which the axis is projected. Therefore, if an axis is angled away from a projection plane and is said to be projected on the projection plane to form a projected axis, then the projected axis extends in the projection plane.

Referring to FIG. 1, there is shown a shotcrete nozzle assembly 100, in accordance with one embodiment.

In the illustrated embodiment, the shotcrete nozzle assembly 100 includes a tubular body 102 which extends between an open inlet body end 104 and an open outlet body end 106. The inlet body end 104 is adapted to be operatively connected to a substantially dry concrete source, not shown, to provide dry concrete ingredients, such as aggregate and cement, into the body 102 through the inlet body end 104. Once the dry concrete ingredients have been mixed with water inside the body 102 to thereby form fresh concrete, the concrete source is further adapted to force the fresh concrete through the body 102 and out the outlet body end 106 to be projected onto a surface.

In one embodiment, the substantially dry concrete source is configured for providing dry concrete ingredients which include less than 10wt% of water into the body 102. It will however be understood that the assembly 100 is not limited for use with substantially dry concrete ingredients and that the concrete source could

instead be configured for providing substantially fresh concrete, i.e. concrete which includes at least 10wt% of water into the body 102.

In the illustrated embodiment, the tubular body 102 includes a concrete wetting section 200 for mixing the concrete ingredients provided by the concrete source with water as they pass through the tubular body 102 and a stream controlling section 300 for controlling a stream of fresh concrete projected from the outlet body end 106.

More specifically, the concrete wetting section 200 is adapted to be operatively connected to a water source, not shown, via a water control valve 150 which allows a user to control a debit and/or pressure of the water being provided into the tubular body 102 to be mixed with the concrete ingredients to form fresh concrete. It is appreciated that, in an alternative embodiment (not shown), the shotcrete nozzle assembly 100 can be free of water control valve 150. For instance, the water flowrate and pressure in the shotcrete nozzle assembly 100 can be adjusted and controlled through another actuator such as and without being limitative a variable speed pump.

In the illustrated embodiment, the stream controlling section 300 is adapted to be operatively connected to a pressurized air source, not shown, to provide air to the stream controlling section 300 of the tubular body 102. The stream controlling section 300 is adapted to guide the air along a helicoidal path to as to form an helicoidal airflow around the stream of fresh concrete projected from the outlet body end 106 to reduce rebound of fresh concrete on the surface on which it is projected, as will be further explained below.

In the illustrated embodiment, the stream controlling section 300 is adapted to be operatively connected to the pressurized air source via an air control valve 152 which allows a user to control a debit and/or pressure of the air being provided into the tubular body 102. As for the water control valve 150, it is appreciated that, in an alternative embodiment (not shown), the shotcrete nozzle assembly 100 can be free of air control valve 152. For instance, the air flowrate and pressure in the

shotcrete nozzle assembly 100 can be adjusted and controlled through another actuator such as and without being limitative a variable speed pressurized air supply.

Alternatively, instead of being provided as separate components which are connected to the tubular body, the water control valve 150 and the air control valve 152, or any other suitable water and air control actuators, could instead be integrated within the tubular body 102.

In the illustrated embodiment, the concrete wetting section 200 and the stream controlling section 300 are provided as two distinct components which are assembled together end-to-end to form the tubular body 102. It will however be understood that the concrete wetting section 200 and the stream controlling section 300 could instead be integrally formed together such that the tubular body 102 defines a single, unitary component.

Turning now to FIGS. 2 to 6B, the tubular body 102 includes a body sidewall 108 which extends from the inlet body end 104 to the outlet body end 106 and which defines a central passageway 110 to allow the concrete to pass from the inlet body end 104 to the outlet body end 106. As shown in FIG. 2, the central passageway 110 is generally straight and extends along a longitudinal passageway axis L positioned centrally within the central passageway 110.

The concrete wetting section 200 extends from the inlet body end 104 towards the outlet body end 106. Specifically, the concrete wetting section 200 extends between a first end 202 corresponding to the inlet body end 104 of the tubular body 102 and a second end 204 spaced longitudinally from the first end 202 towards the outlet body end 106. The body sidewall 108 further includes a wetting sidewall section 206 which extends along the concrete wetting section 200 between the first and second ends 202, 204 of the concrete wetting section 200.

The concrete wetting section 200 includes a water inlet 208 operatively connectable to the water source to allow the water to be dispensed into the central passageway 110. In the illustrated embodiment, the water inlet 208 is connectable

to the water control valve 150 which it itself connected to the water source, as explained above, but could instead be configured to be connected directly to the water source.

In the illustrated embodiment, the water inlet 208 includes a circular inlet opening 210 which is defined in the wetting sidewall section 206 of the body sidewall 108 and which defines an inlet axis A extending substantially orthogonally to the longitudinal passageway axis L.

In the illustrated embodiment, the concrete wetting section 200 is double-walled. More specifically, the wetting sidewall section 206 includes an outer wall 212 and an inner wall 214 which is coaxially disposed within the outer wall 212. The inner wall 214 is spaced radially inwardly from the outer wall 212 to define an interstitial annular chamber 216 between the outer and inner walls 212, 214. The annular chamber 216 is in fluid communication with the inlet member 210 such that the water provided by the water source is dispensed from the water source into the annular chamber 216 through the circular inlet opening 210.

The circular inlet opening 210 may be operatively connectable to the water control valve 150 using an intermediate pipe extending between the air control valve 152 and the circular inlet opening 210. The intermediate pipe could include an externally threaded end surface and the circular inlet opening 210 could include a corresponding inner threaded surface sized and shaped to engage the externally threaded end surface of the intermediate pipe. Alternatively, the intermediate pipe could instead be welded to the wetting sidewall section 206, or be secured to the wetting sidewall section 206 using any another securing technique that a skilled person would consider to be suitable.

As shown in FIG. 2, the inner wall 214 has an inner face 218 which faces inwardly towards the central passageway 110 and delimits the same, and an outer face 220 which faces radially outwardly from the central passageway 110 and towards the annular chamber 216 and delimits inwardly the same.

In the illustrated embodiment, the concrete wetting section 200 is made of two distinct portions: an inner tube 222 which defines the inner wall 214 and an outer tube 224 which defines the outer wall 212. More specifically, the outer tube 224 includes an inner annular recess 226 extending from the second end 204 towards the first end 202 of the concrete wetting section 200. The inner tube 222 includes an end portion 228 extending from the second end 204 towards the first end 202 of the concrete wetting section 200 and an enlarged diameter portion 229 which extends from the end portion 228 towards the first end 202 of the concrete wetting section 200. The enlarged diameter portion 229 extends radially outwardly from the outer face 220 and is sized and shaped to be snuggly received in inner annular recess 226 of the outer tube 224. This configuration allows the inner tube 222 to be slidably inserted axially into the outer tube 224 from the second end 204 towards the first end 202 of the concrete wetting section 200. In the illustrated embodiment, the inner and outer tubes 222, 224 are secured together using one or more locking pins, not shown, which are inserted through corresponding openings in the inner and outer tubes 222, 224 to prevent further movement of the inner and outer tubes 222, 224 relative to each other. Alternatively, the outer tube 224 may further be secured to the inner tube 222 using corresponding threaded portions threadably engaging each other, with one or more fasteners or using other securing techniques such as welding or the like.

Still referring to FIGS. 2 to 6B, the concrete wetting section 200 further includes a plurality of water dispensing bores 230 extending through the body sidewall 108 between the water inlet 208 and the central passageway 110 to dispense the water provided through the water inlet 208 into the central passageway 110. Specifically, each water dispensing bore 230 includes an inlet opening 232 defined in the outer face 220 of the inner tube 222, an outlet opening 234 defined in the inner face 218 of the inner tube 222 and a central bore segment 235 extending between the inlet and outlet openings 232, 234. The inlet opening 232 allows fluid communication between the annular chamber 216 and the central bore segment 235 and the outlet opening 234 allows fluid communication between the central bore segment 235 and the central passageway 110.

It will be appreciated that this configuration allows all the water dispensing bores 230 to be in fluid communication with the annular chamber 216, which thereby acts as a manifold to dispense water from a single water inlet to multiple water dispensing bores. The water is further provided to the water dispensing bores 230 from the water source through the water inlet 208 with a certain pressure such that the water is projected into the central passageway 110 from each water dispensing bore 230. More specifically, each water dispensing bore 230 is elongated and extends along a central bore axis B, best shown in FIG. 6B. The water is projected into the central passageway 110 through the outlet opening 234 and generally linearly along the central bore axis B.

In the illustrated embodiment, the water dispensing bores 230 are sized and shaped to atomize the water provided through the water dispensing bores 230 into a substantially fine mist containing water droplets having a substantially small size. This may contribute to further improve the mixing of the dry concrete ingredients with the water as it passes through the concrete wetting section 200. In one embodiment, each water dispensing bore 230 has a diameter of between 0.5 mm and 2.5 mm, and more specifically of between about 0.600 mm and 0.650 mm, which allows the water dispensed through the bore 230 to be substantially atomized.

In this embodiment, the water is therefore projected as a water spray of atomized water into the central passageway 110. The water spray could be generally cylindrical or could be generally conical and expand as it exits the outlet opening 234. Regardless of its shape, the water spray is still projected along the central bore axis B, such that the central bore axis B extends generally at a center of the water spray.

In the illustrated embodiment, the water dispensing bores 230 are disposed such that the water sprays formed by the water dispensing bores 230 provide the water to the dry concrete ingredients relatively uniformly across the entire cross-section of the central passageway 110 as the dry concrete ingredients pass from the first end 202 to the second end 204 of the concrete wetting section 200. More

specifically, the water dispensing bores 230 include first, second, third and fourth sets of water dispensing bores 230a, 230b, 230c, 230d. For each set of water dispensing bores 230a, 230b, 230c, 230d, the outlet opening 234 of the water dispensing bores 230 are disposed along a corresponding bore opening transversal plane extending orthogonally to the longitudinal passageway axis L, and each bore opening transversal plane is disposed at a certain longitudinal location along the concrete wetting section 200, i.e. each one of the sets of water dispensing bores 230a, 230b, 230c, 230d is spaced-apart from adjacent ones of the sets of water dispensing bores 230a, 230b, 230c, 230d along the longitudinal passageway axis L.

In the illustrated embodiment, the outlet openings 234 of the first set of water dispensing bores 230a are disposed in a first bore opening transversal plane T_1 which is spaced longitudinally from the inlet body end 104 towards the outlet body end 106. Similarly, the outlet openings 234 of the second set of water dispensing bores 230b are disposed in a second bore opening transversal plane T_2 spaced longitudinally from the first bore opening transversal plane T_1 towards the outlet body end 106, the outlet openings 234 of the third set of water dispensing bores 230c are disposed in a third bore opening transversal plane T_3 spaced longitudinally from the second bore opening transversal plane T_2 towards the outlet body end 106 and the outlet openings 234 of the fourth set of water dispensing bores 230d are disposed in a fourth bore opening transversal plane T_4 spaced longitudinally from the third bore opening transversal plane T_3 towards the outlet body end 106.

The first bore opening transversal plane T_1 is therefore spaced longitudinally from the inlet body end 104 by a first longitudinal distance D_1, the second bore opening transversal plane T_2 is spaced longitudinally from the inlet body end 104 by a second longitudinal distance D_2 which is greater than the first longitudinal distance D_1, the third bore opening transversal plane T_3 is spaced longitudinally from the inlet body end 104 by a third longitudinal distance D_3 which is greater than the second longitudinal distance D_2 and the fourth bore opening transversal plane T_4

is spaced longitudinally from the inlet body end 104 by a fourth longitudinal distance D_4 which is greater than the third longitudinal distance D_3.

Still in the illustrated embodiment, the first longitudinal distance D_1 is between about 0.600 inches and 0.650 inches (i.e. between about 15.24 mm and 16.51 mm), the second longitudinal distance D_2 is between about 1.775 inches and 1.825 inches (i.e. between about 45.09 mm and 46.36 mm), the third longitudinal distance D_3 is between about 2.950 inches and 3 inches (i.e. between about 74.93 mm and 76.20 mm) and the fourth longitudinal distance D_4 is between about 4.150 inches and 4.200 inches (i.e. between about 105.41 mm and 106.68 mm). Alternatively, the transversal planes T_1, T_2, T_3, T_4 could be disposed at different longitudinal locations along the concrete wetting section 200 such that the longitudinal distances D_1, D_2, D_3, D_4 are different.

As water is dispensed from the water source and through the annular chamber 216 at a certain water pressure, which could be predetermined or could be selectively adjusted using the water control valve 150 or other water pressure adjusting mechanism, each water dispensing bore 230 creates a corresponding water spray which is projected from the water dispensing bore 230 into the central passageway 110.

In the illustrated embodiment, as shown in FIG. 5, the water dispensing bores 230 in each set of water dispensing bores 230a, 230b, 230c, 230d are oriented relative to each other such that their central bore axes B all extend in a non-radial direction relative to a center of the central passageway 110, i.e. the centrally-extending longitudinal passageway axis L. In other words, instead of being oriented towards the centrally-extending longitudinal passageway axis L and intersecting the centrally-extending longitudinal passageway axis L (thereby substantially defining radii of the central passageway 110), the central bore axes B of the water dispensing bores 230 are all substantially spaced from and non-intersecting with the centrally-extending longitudinal passageway axis L.

It has been found that this configuration unexpectedly improves the ability of the concrete wetting section 200 to mix the dry concrete ingredients passing therethrough with water relatively uniformly compared to other wetting devices comprising water dispensing bores which form water sprays or water jets that are all oriented radially towards a central longitudinal axis of the central passageway.

In the illustrated embodiment, each set of water dispensing bores 230a, 230b, 230c, 230d includes first and second subsets of water dispensing bores 231a, 231b which are located opposite each other across the central passageway 110. This configuration allows the dry concrete ingredients to be wetted from opposite sides as it passes through each bore opening transversal planes T_1, T_2, T_3, T_4.

In the illustrated embodiment, the first and second subsets of water dispensing bores 231a, 231b include a same number of water dispensing bores 230. Specifically, both the first and second subsets of water dispensing bores 231a, 231b include three spaced-apart dispensing bores 230. Each set of water dispensing bores 230a, 230b, 230c, 230d therefore includes six water dispensing bores 230, for a total of 24 water dispensing bores 230 for all four sets of water dispensing bores 230a, 230b, 230c, 230d.

Alternatively, the first and second subsets of water dispensing bores 231a, 231b could include less or more than three spaced-apart water dispensing bores 230. In yet another embodiment, the first subset of water dispensing bores 231a may not include the same number of water dispensing bores 230 as the second subset of water dispensing bores 231b. In yet another embodiment, instead of being divided into two subsets, all water dispensing bores 230 could be disposed side-by-side and project water into the central passageway 110 in the same direction. In yet another embodiment, instead of comprising two subsets of water dispensing bores, the plurality of water dispensing bores 230 could instead be divided into more than two subsets, with each subset being spaced from adjacent subset around a circumference of the central passageway 110.

In the illustrated embodiment, the water dispensing bores 230 in each subset of water dispensing bores 231a, 231b are spaced from each other in a transversal direction across the central passageway 110 and are oriented relative to each other such that their central bore axes B all extend substantially parallel to each other. It will be understood that the term "substantially parallel" as used hereinabove means that the central bore axes B of the water dispensing bores 230 in each subset of water dispensing bores 231a, 231b may not be exactly parallel to each other, but may instead be slightly angled relative to each other. In other words, the water dispensing bores 230 could be oriented such that their central bore axes B are angled relative to each other by a relatively small tolerance within which a skilled person would still consider that the central bore axes B of the water dispensing bores 230 in each subset of water dispensing bores 231a, 231b are parallel to each other.

In the illustrated embodiment, as shown in FIGS. 6A and 6B, the water dispensing bores 230 are oriented such that their central bore axes B do not extend orthogonally to the longitudinal passageway axis L. In other words, the water dispensing bores 230 are not oriented such that their central bore axes B extend in the corresponding bore opening transversal plane T_1, T_2, T_3 or T_4 in which their outlet opening 234 are disposed. Instead, the water dispensing bores 230 are oriented such that the central bore axes B are angled away from the corresponding bore opening transversal plane T_1, T_2, T_3 or T_4 and longitudinally towards the outlet body end 106. More specifically, the central bores axes B of the water dispensing bores 230 are angled by a longitudinal angle θ such that their inlet ends 232 are located towards the inlet body end 104 with respect to their outlet ends 234, which are located towards the outlet body end 106. In this configuration, the pressure from the water sprays projected from the water dispensing bores 230 may contribute to further urge the fresh concrete in the central passageway 110 towards the outlet body end 106.

In one embodiment, the longitudinal angle θ is about 15 degrees relative to the corresponding bore opening transversal plane T_1, T_2, T_3, T_4 of the water dispensing

bore 230. Alternatively, the longitudinal angle θ could be any angle between 10 degrees and 60 degrees, or could be any other angle which a skilled person would consider to be appropriate. In yet another embodiment, the water dispensing bores 230 may not be angled longitudinally, and may instead be oriented such that their central bore axis B extends orthogonally relative to the longitudinal passageway axis L, i.e. in the corresponding bore opening transversal plane T_1, T_2, T_3 or T_4.

In the illustrated embodiment, each water dispensing bore 230 is generally cylindrical. It will be understood that since the water dispensing bores 230 are angled longitudinally towards the outlet body end 106, the outlet openings 234 of the water dispensing bores 230 are not perfectly circular as they would be if the water dispensing bore 230 were oriented such that their central bore axis B was orthogonal to the longitudinal passageway axis L, but are instead generally oblong. More specifically, the water dispensing bores 230 are elongated in a longitudinal direction parallel to the longitudinal passageway axis L. Alternatively, the outlet openings 234 may not be oblong. In yet another embodiment, the water dispensing bores 230 may not be cylindrical and could instead be shaped differently.

As best shown in FIG. 6A, the central bore axes B of the first subset of water dispensing bores 231a and the central bore axes B of the second subset of water dispensing bores 231b are substantially mirror images of each other across the longitudinal passageway axis L of the central passageway 110. In this embodiment, the first and second subsets of water dispensing bores 231a, 231b are therefore not parallel to each other. Instead, the first and second subsets of water dispensing bores 231a, 231b are aligned with each other across the central passageway 110. In this configuration, if the central bore axes B of the first and second subsets of water dispensing bores 231a, 231b were projected onto one of the bore opening transversal plane T_1, T_2, T_3 or T_4 to form on the bore opening transversal plane a plurality of projected central bore axes corresponding to the central bore axes B, then the central bore axes B of the first subset of water dispensing bores 231a would coincide with the central bore axes B of the second subset of water dispensing bores 231b. The projected central bore axes for each

set of water dispensing bores 230a, 230b, 230c, 230d would therefore all be parallel to each other.

FIG. 5 shows the inner tube 222 viewed from the second end 204 of the concrete wetting section 200 and looking towards the first end 202. From this viewpoint, the central bore axes B appear as if orthogonally projected on a common transversal plane to form corresponding projected bore axes. More specifically, the central bore axes B of the first set of water dispensing bores 230a form a plurality of first projected central bore axes 236a, the central bore axes B of the second set of water dispensing bores 230b form a plurality of second projected central bore axes 236b, the central bore axes B of the third set of water dispensing bores 230c form a plurality of third projected central bore axes 236c, and the central bore axes B of the fourth set of water dispensing bores 230d form a plurality of fourth projected central bore axes 236d. Alternatively, instead of being parallel to each other, the central bore axes B of each set of water dispensing bores 230a, 230b, 230c, 230d could instead be angled relative to each other such that each set of water dispensing bores 230a, 230b, 230c, 230d defines projected central bore axes which converge towards each other or diverge from each other.

As explained above, the outlet openings 234 of each set of water dispensing bores 230a, 230b, 230c, 230d are disposed in a corresponding transversal plane T_1, T_2, T_3, T_4, and the transversal planes T_1, T_2, T_3, T_4 are spaced apart from each other longitudinally. The central bore axes B from each set of water dispensing bores 230a, 230b, 230c, 230d therefore does not intersect the central bore axes B from any of the other sets of water dispensing bores 230a, 230b, 230c, 230d. However, the water dispensing bores 230 of the first and second sets of water dispensing bores 230a, 230b are disposed such that, when their central bore axes B are orthogonally projected on one of the transversal planes T_1, T_2, T_3 or T_4, the projected central bore axes 236a of the first set of water dispensing bores 230a intersect the central bore axes 236b of the second set of water dispensing bores 236b at a non-zero angle.

In other words, according to a cylindrical coordinate system having a longitudinal axis defined by the longitudinal passageway axis L, the central bore axes B of the first and second sets of water dispensing bores 230a, 230b are angled relative to each other at a predetermined polar angle.

More specifically, FIG. 5 shows the first projected central bore axes 236a defined by the first set of water dispensing bores 230a and the second projected central bore axes 236a 236b defined by the second set of water dispensing bores 230b. In this embodiment, the pluralities of first and second projected central bore axes 236a, 236b are angled at a polar angle of about 90 degrees relative to each other and are therefore perpendicular to each other. As shown in FIG. 5, when viewed from the second end 204 of the concrete wetting section 200, the pluralities of first and second projected central bore axes 236a, 236b therefore substantially define a grid pattern. Alternatively, the pluralities of first and second projected central bore axes 236a, 236b could instead be angled relative to each other according to a polar angle which is different from 90 degrees.

Similarly, the third and fourth sets of water dispensing bores 230c, 230d are oriented such that the first and second projected central bore axes 236a, 236b, 230d are angled at predetermined non-zero angles relative to the third and fourth projected central bore axes 236c, 236d defined by the third and fourth sets of water dispensing bores 230c, 230d.

In the embodiment illustrated in FIG. 5, the third projected central bore axes 236c are generally parallel to the first projected central bore axes 236a. The third projected central bore axes 236c are further laterally offset relative to the first projected central bore axes 236a such that, when viewed from the second end 204 of the concrete wetting section 200, the first projected central bore axes 236a disposed alternately between the water sprays of the third projected central bore axes 236c in the grid pattern formed by the projected central bore axes. Alternatively, instead of being laterally offset relative to the first projected central bore axes 236a, the third set of water dispensing bores 230c could be disposed such that the third projected central bore axes 236c is aligned longitudinally with

the first projected central bore axes 236a. In this configuration, the first projected central bore axes 236a and the third projected central bore axes 236c would appear to overlap each other when viewed from the second end 204 of the concrete wetting section 200.

In yet another embodiment, instead of the first and third projected central bore axes 236a, 236c being parallel to each other, the third set of water dispensing bores 230c could be disposed such that the first and third projected central bore axes 236a, 236c are angled relative to each other at a non-zero polar angle.

Still in the embodiment illustrated in FIG. 5, the fourth projected central bore axes 236d are generally parallel to the second projected central bore axes 236b. The fourth projected central bore axes 236d are therefore substantially perpendicular to the first and third projected central bore axes 236a, 236c.

The fourth projected central bore axes 236d are further laterally offset relative to the second projected central bore axes 236b such that, when viewed from the second end 204 of the concrete wetting section 200, the second projected central bore axes 236b are disposed alternately between the fourth projected central bore axes 236d in the grid pattern formed by the projected central bore axes. Alternatively, instead of being laterally offset relative to the second projected central bore axes 236b, the fourth set of water dispensing bores 230d could be disposed such that the fourth projected central bore axes 236d are aligned with the second projected central bore axes 236b. In this configuration, the second projected central bore axes 236b and the fourth projected central bore axes 236d would appear to overlap each other when viewed from the second end 204 of the concrete wetting section 200.

In yet another embodiment, instead of the second and fourth projected central bore axes 236b, 236d being parallel to each other, the fourth set of water dispensing bores 230d could be disposed such that the second and fourth projected central bore axes 236b, 236d are angled relative to each other at a non-zero polar angle.

It has been found that this configuration, as opposed, for instance, to a configuration in which the water dispensing bores 230 would be disposed in a single transversal plane and/or would all be distributed around the central passageway 110 and all oriented radially towards a center of the central passageway 110, provides a more uniform mixing of the dry concrete ingredients passing through the central passageway 110 with the water on all lateral sides, as well as throughout the cross-sectional area of the flow of concrete passing through the central passageway 110. This, in turn, may further improve the uniformity of the fresh concrete projected from the outlet body end 106 of the tubular body 102. This may further lead to a reduction of the concentration of suspended particles caused by the fresh concrete as it is dispensed from the assembly 100, which in turn could reduce loss of material, accelerate the application of shotcrete by allowing more shotcrete to be provided on the target surface over a certain period of time and generally make the shotcrete application less messy by preventing surfaces other than the target surface to be undesirably soiled by fresh concrete. Moreover, a reduction in the concentration of suspended particles during the application of shotcrete may further reduce health and safety risks for an operator of the shotcrete nozzle assembly 100, as well as improve the visibility during the application of shotcrete which may lead to a higher quality application of the shotcrete as well as to an increase in productivity. A reduction in the concentration of suspended particles during the application of shotcrete may further increase the social acceptability of the application of shotcrete in locations where passers-by may be exposed to the suspended particles, especially in enclosed environment such as subway stations, underground passages or the like.

For example, it has been observed that in some circumstances, the shotcrete nozzle assembly 100 comprising the concrete wetting section 200 described above and illustrated in FIGS. 1 to 6B could reduce the concentration of suspended particles by as much as 71% and the amount of fresh concrete particles rebounding on the target surface by as much as 31% when compared to a conventional shotcrete nozzle.

It will be understood that although in the above-described configuration, the central bore axes B of the water dispensing bores 230 of the first, second, third and fourth sets of water dispensing bores 230a, 230b, 230c, 230d are all oriented in a non-radial direction, only a portion of the central bore axes B of the water dispensing bores 230 of the first, second, third and/or fourth sets of water dispensing bores 230a, 230b, 230c, 230d could be oriented in a non-radial direction, with one or more of the water dispensing bores 230 of the first, second, third and/or fourth sets of water dispensing bores 230a, 230b, 230c, 230d being oriented in a radial direction. In other words, instead of the central bore axes B of the water dispensing bores 230 being all substantially spaced from and non-intersecting with the centrally-extending longitudinal passageway axis L, one or more of the water dispensing bores 230 could be oriented such that the central bore axes B thereof intersects the centrally-extending longitudinal passageway axis L. Notwithstanding, this configuration still provides at least some of the above-identified benefits over a conventional configuration in which the water dispensing bores 230 are all oriented radially towards a center of the central passageway 110.

The water debit and/or water pressure provided by the water source may further be adjusted using the water control valve 150 such that the water sprays are strong enough to shear the flow of dry concrete ingredients and thereby contribute to mixing the dry concrete ingredients with the water as it passes through the concrete wetting section 200. In one embodiment, the water is provided in the water inlet 208 at a pressure between about 3.5 MPa to 24 MPa. Alternatively, the water could be provided at a different pressure.

In an alternative embodiment, the water dispensing bores 230 may not be configured to atomize the water. Instead, the water may be dispensed in the central passageway 110 in the form of water jets made of a continuous stream of water, rather than water sprays made of discrete droplets. It will be understood that the above description would also apply to such an embodiment, with the water jets being substituted for water sprays.

Still in the illustrated embodiment, the concrete wetting section 200 further includes a plurality of annular grooves 250a, 250b, 250c, 250d which are defined in the inner face 218 of the inner tube 222. Specifically, the annular grooves 250a, 250b, 250c, 250d extend radially outwardly towards the outer face 220 of the inner tube 222 and circumferentially around the central passageway 110. Each annular groove 250a, 250b, 250c, 250d is disposed along a corresponding bore opening transversal plane T_1, T_2, T_3, T_4 of the concrete wetting section 200 such that the outlet openings 234 of the water dispensing bores 230 are located within the corresponding annular groove 250a, 250b, 250c, 250d. Therefore, the outlet openings 234 of the water dispensing bores 230 are slightly recessed with respect to a main portion of the central passageway 110.

More specifically, the concrete wetting section 200 includes a first annular groove 250a longitudinally aligned with the first transversal plane T_1, a second annular groove 250b longitudinally aligned with the second transversal plane T_2, a third annular groove 250c longitudinally aligned with the third transversal plane T_3, and a fourth longitudinal groove 250d longitudinally aligned with the fourth transversal plane T_4. In this configuration, the outlet openings 234 of the first set of water dispensing bores 230a are therefore located within the first annular groove 250a, the outlet openings 234 of the second set of water dispensing bores 230b are located within the second annular groove 250b, the outlet openings 234 of the third set of water dispensing bores 230c are located within the third annular groove 250c and the outlet openings 234 of the fourth set of water dispensing bores 230d are located within the fourth annular groove 250d. It will be appreciated that the grooves 250a, 250b, 250c, 250d may further contribute to mixing the concrete ingredients passing through the concrete wetting section 200 with water more uniformly by spacing the outlet openings 234 radially outwardly away from the dry concrete ingredients passing in the central passageway 110.

In the illustrated embodiment, since the water dispensing bores 230 are angled longitudinally towards the outlet body end 106, the annular grooves outlet openings 250a, 250b, 250c, 250d may interfere with the water sprays or jets formed by the

water dispensing bores 230 if the outlet openings 234 of the water dispensing bores 230 were located too deep within the annular groove 250a, 250b, 250c, 250d and/or if the annular groove 250a, 250b, 250c, 250d is too narrow. Therefore, the annular grooves 250a, 250b, 250c, 250d could be sized and shaped such that the annular grooves 250a, 250b, 250c, 250d do not interfere with the water sprays or jets formed by the water dispensing bores 230.

In the illustrated embodiment, each annular groove 250a, 250b, 250c, 250d has a width of between 1 to 10 times the diameter of the water dispensing grooves 230 and a depth of between 0 mm and 5 mm. Alternatively, the annular grooves 250a, 250b, 250c, 250d could have any of other size and/or dimension which a skilled person would consider to be appropriate.

Still in the illustrated embodiment, all the annular grooves 250a, 250b, 250c, 250d are similarly sized and shaped to each other. Alternatively, the annular grooves 250a, 250b, 250c, 250d could have different shapes, width and depth from each other. In yet another embodiment, the concrete wetting section 200 may not even include any annular grooves 250a, 250b, 250c, 250d, the inner face 218 of the inner tube 222 instead being substantially smooth and continuous between the first and second ends 202, 204 of the concrete wetting section 200.

It will be understood that the above configuration of the sets of sets of water dispensing bores 230a, 230b, 230c, 230d and of the corresponding annular grooves 250a, 250b, 250c, 250d are merely provided as an example, and that many alternative configurations would be possible. For example, the concrete wetting section 200 could instead include a number of sets of water dispensing bores 230a, 230b, 230c, 230d and of grooves annular grooves 250a, 250b, 250c, 250d comprised between 2 and 10. Alternatively, the concrete wetting section 200 could include more than 10 sets of water dispensing bores 230a, 230b, 230c, 230d and of grooves annular grooves 250a, 250b, 250c, 250d.

Moreover, the total number of water dispensing bores 230 distributed among these sets of water dispensing bores could be between 5 and 85, but could alternatively include less than 5 or more than 85 water dispensing bores 230.

Referring now to FIGS. 7 and 8, there is shown a concrete wetting section 200' for the shotcrete nozzle assembly 100, in accordance with another embodiment. Similarly to the concrete wall section 200, the concrete wall section 200' is double-walled and includes an inner tube 222' and an outer tube 224'. In this embodiment, the outer tube 224' has a first end 260 located towards a first end 202' of the concrete wetting section 200' and a second end 262 located towards a second end 204' of the concrete wetting section 200' with an internally-threaded portion 264 located adjacent to its second end 262. More specifically, the internally-threaded portion 264 extends slightly inwardly into the central passageway 110 to define an inner annular shoulder 266 facing generally towards the first end 260 of the outer tube 224'.

Still in this embodiment, the inner tube 222' extends between a first end 268 located towards the first end 202' of the concrete wetting section 200' and a second end 270 located towards the second end 204' of the concrete wetting section 200'. The inner tube 222' further includes a first enlarged diameter portion 272 located adjacent to its first end 268. More specifically, the enlarged diameter portion 272 extends radially outwardly from a central segment 273 of the inner tube 222' to define an outer annular stop 274 which faces generally towards the second end 270 of the inner tube 222'.

The inner tube 222' further includes an externally-threaded portion 276 located adjacent to its second end 270 and a second enlarged diameter portion 278 extending longitudinally from the externally-threaded portion 276 towards the first end 268. Specifically, the second enlarged diameter portion 278 extends radially outwardly from the central segment 273 to define an inner annular stop 280 which faces generally towards the second end 270 of the inner tube 222'.

In this embodiment, the inner tube 222' is insertable axially into the outer tube 224' through the first end 260 of the outer tube 224' and towards the second end 262. When the externally-threaded portion 276 of the inner tube 222' reaches the internally-threaded portion 264 of the outer tube 224', the externally-threaded portion 276 may further be threadably engaged with the internally-threaded portion 264 and screwed into the internally-threaded portion 264 to further move the inner tube 222' axially into the outer tube 224' until the outer annular stop 274 abuts the first end 260 of the outer tube 224' and/or the inner annular stop 280 abuts the inner annular shoulder 266 to the outer tube 224'. In this position, the inner tube 222' is therefore connected to the outer tube 224' and forms, with the outer tube 224', the concrete wetting section 200'.

In the embodiment illustrated in FIGS. 7 and 8, when the inner tube 222' is fully inserted in the outer tube 224', the externally-threaded portion 276 further extends beyond the second end 262 of the outer tube 224' to threadably engage a corresponding threaded portion of the stream controlling section 300 and thereby connect the stream controlling section 300 to the concrete wetting section 200', as will be described in more details below.

Still in this embodiment, as shown in FIG. 7, instead of including a single tubular inlet member, the water inlet includes a pair of tubular inlet members 282a, 282b disposed radially opposite each other and extending radially outwardly from the outer tube 224'. In this embodiment, the tubular inlet members 282a, 282b are coaxial and extend along a common inlet axis A' which is generally orthogonal to the longitudinal passageway axis L. Alternatively, the tubular inlet members 282a, 282b could be offset relative to each other or to the longitudinal passageway axis L, or could be disposed such that the inlet axis A' is angled relative to the longitudinal passageway axis L.

Referring now to FIGS. 2 and 9 to 12, the stream controlling section 300 includes a first end 302 adapted to be connected to the second end 204 of the concrete wetting section 200 and a second end 304 which corresponds to the outlet body end 106 of the tubular body 102.

In the illustrated embodiment, the stream controlling section 300 includes an air inlet 306 operatively connectable to the pressurized air source. Specifically, the stream controlling section 300 includes an air inlet manifold 308 located adjacent to the first end 302 and an elongated nozzle tip portion 310 extending between the inlet manifold 308 and the second end 304 of the stream controlling section 300.

As shown in FIG. 11, the air inlet manifold 308 includes an annular manifold inner conduit 312 which defines an annular path surrounding the central passageway 110. The air inlet 306 is defined in the air inlet manifold 308 and includes a circular air inlet opening 314 which allows the air from the pressurized air source to enter the manifold inner conduit 312. The air inlet opening 314 defines a manifold opening axis O, along which the air is directed as it enters the manifold inner conduit 312. As shown in FIG. 11, the air inlet opening 314 is positioned such that the manifold opening axis O is offset relative to the center of the central passageway 110 and extends generally tangentially relative to the central passageway 110 so as to guide the air from the pressurized air source into the air manifold 308 in a tangential direction relative to the central passageway 110. In other words, the manifold inner conduit 312 includes an inlet segment 315 which extends from the air inlet opening 314 inwardly into the air inlet manifold 308 and which extends in tangential direction with respect to the central passageway 110 to guide the air in a corresponding tangential direction.

In the illustrated embodiment, the body sidewall 108 includes a nozzle tip sidewall section 316 which extends along the nozzle tip portion 310 between a first nozzle tip end 318 adjacent to and extending from the air manifold 308 and a second nozzle tip end 320 opposite the first nozzle tip end 318.

Still in the illustrated embodiment, the nozzle tip sidewall section 316 is hollow and includes a peripheral air conduit 321 which extends between the first and second nozzle tip ends 318, 320. More specifically, the nozzle tip sidewall section 316 includes a plurality of partition walls 323 which divide the peripheral air conduit 321 into first, second, third and fourth helicoidal air conduits 322a, 322b, 322c, 322d. Each helicoidal air conduit 322a, 322b, 322c, 322d includes a conduit inlet 324 in

communication with the manifold inner conduit 312 of the air inlet manifold 308 and a conduit outlet 326 located at the outlet body end 106 and which is transversely offset relative to the central passageway 110, i.e. offset with respect to a periphery of the central passageway 110. The helicoidal air conduits 322a, 322b, 322c, 322d are configured for guiding the air from the air inlet manifold 308 in an helicoidal path around the central passageway 110, through the nozzle tip portion 310 and out through the conduit outlet 326, generally in the same longitudinal direction as the stream of fresh concrete projected from the outlet body end 106.

In the illustrated embodiment, the helicoidal air conduits 322a, 322b, 322c, 322d are isolated from the central passageway 110, so as not to mix the air with the fresh concrete as it passes through the stream controlling section 300. Alternatively, the helicoidal air conduits 322a, 322b, 322c, 322d could communicate with the central passageway 110 through one or more air openings extending between one or more of the helicoidal air conduits 322a, 322b, 322c, 322d and the central passageway 110 to allow a portion of the pressurized air travelling through the corresponding helicoidal air conduit 322a, 322b, 322c, 322d to enter the central passageway 110 and further urge the fresh concrete through the central passageway 110.

The helicoidal path of the air through the nozzle tip portion 310 causes the air to continue travelling in a generally helicoidal airflow as it exits the helicoidal air conduits 322a, 322b, 322c, 322d beyond the outlet body end 106. The airflow will therefore twist around the stream of fresh concrete projected from the outlet body end 106 and accelerate fresh concrete particles located in an outer layer of the stream of fresh concrete. These particles may have been decelerated relative to the rest of the stream of fresh concrete as the concrete passes through the nozzle assembly 100, causing them to not have enough speed or energy to adhere to the surface and to thereby rebound against the surface. By providing this helicoidal airflow to accelerate these particles, the amount of fresh concrete particles which adhere to the surface are increased, thereby reducing the amount of rebound and therefore of waste from a shotcrete operation.

Furthermore, the generally helicoidal airflow could prevent the stream of fresh concrete from spreading into a conical stream as it travels between the outlet body end 106 and the surface on which the fresh concrete is to be applied. Specifically, the stream of fresh concrete may be substantially confined within an interior, cylindrical axially-extending space of the helicoidal airflow to thereby adopt a similar, generally cylindrical shape. This allows the stream of fresh concrete to be more directed or focused on the surface on which the fresh concrete is to be applied and thereby contributes to preventing the fresh concrete from splattering onto adjacent surfaces.

In one embodiment, the air is provided by the pressurized air source at a pressure of about 0.5 MPa to 3.5 MPa. Alternatively, the air could be provided by the pressurized air source at a different pressure.

In the illustrated embodiment, the four helicoidal air conduits 322a, 322b, 322c, 322d are similarly sized and shaped to each other, but are angularly offset relative to each other around the central passageway 110. Specifically, the conduit inlets 324 of the helicoidal air conduits 322a, 322b, 322c, 322d are angularly offset by 90 degrees relative to each other. It will be understood that the conduit outlets 326 are similarly angularly offset relative to each other. The helicoidal air conduits 322a, 322b, 322c, 322d therefore extend equidistant from each other as they twist around the central passageway 110 from the first nozzle tip end 318 to the second nozzle tip end 320.

In another embodiment, the nozzle tip portion 310 may not include four helicoidal air conduits 322a, 322b, 322c, 322d. Instead, the nozzle tip portion 310 may include any number of helicoidal air conduits 322a, 322b, 322c, 322d between two to eight helicoidal conduits. In yet another embodiment, the nozzle tip portion 310 could include a single helicoidal conduit, or more than eight helicoidal conduits.

In the illustrated embodiment, the nozzle tip portion 310 is further adapted to mix the fresh concrete coming from the concrete wetting section 200 and passing through the stream controlling section 300 before it is expelled through the outlet

body end 106. Specifically, the nozzle tip sidewall section 316 includes an inner face 330 which faces inwardly towards the central passageway 110. The inner face 330 includes a mixing portion 311 which, in the illustrated embodiment, extends substantially along an entire length of the nozzle tip portion 310.

In the illustrated embodiment, the mixing portion 311 includes two helicoidal mixing recesses 340a, 340b defined in the inner face 330. It will be appreciated that the fresh concrete, or at least an outer layer of the fresh concrete, is substantially twisted by the two helicoidal recesses 340a, 340b as it moves along the nozzle tip portion 310. This may contribute to the homogeneity and uniformity of the stream of fresh concrete which is projected from the outlet body end 106. In some implementations, concrete characterized by a higher homogeneity showed higher compressive strength. Alternatively, the nozzle tip portion 310 could include any number of helicoidal mixing recesses between two and six helicoidal recesses 340a, 340b. In another embodiment, the nozzle tip portion 310 could include a single helicoidal mixing recess 340a, 340b or more than six helicoidal mixing recesses 340a, 340b. In another embodiment, the recesses may not be helicoidal and may instead be configured according to any other configuration that a skilled person would consider to be suitable to mix the fresh concrete as it passes through the nozzle tip portion 310. In still another embodiment, the nozzle tip sidewall section 316 could instead be free of recess and therefore be substantially smooth.

In the illustrated embodiment, the air inlet manifold 308 and the nozzle tip portion 310 are provided as distinct components which are secured together to form the stream controlling section 300. More specifically, the inlet manifold 308 includes a first peripheral and outwardly-extending flange 350 and the nozzle tip portion 310 includes a second peripheral and outwardly-extending flange 352 sized and shaped to be placed against the first flange 350 and to be secured to the first flange 350 using suitable mechanical fasteners. Alternatively, the inlet manifold 308 and the nozzle tip portion 310 could be secured together using other securing techniques such as welding or the like. In yet another embodiment, the air inlet manifold 308 and the nozzle tip portion 310 could instead be integrally formed

together such that the stream controlling section 300 includes a single, unitary body.

It will further be appreciated that although the concrete wetting section 200 and the stream controlling section 300 have been described hereinabove in combination with each other, they could instead be used independently from each other. In another embodiment, the concrete wetting section 200 could be used with a conventional nozzle tip section. Similarly, in another embodiment, the above stream controlling section 300 could be used with a conventional water ring. In yet another embodiment, the stream controlling section 300 could instead be provided as an independent stream controlling device for use with a shotcrete nozzle assembly adapted to be used for wet-mix shotcrete. In this embodiment, the first end 302 of the stream controlling section 300 could be operatively connected directly to a fresh concrete source which provides fresh concrete to the stream controlling section via the shotcrete nozzle assembly, instead of being connected to a water ring.

The above-described shotcrete nozzle assembly 100, including the concrete wetting section 200 and the stream controlling section 300, is particularly suitable to be used with fast setting concrete and fiber-reinforced concrete.

It will be appreciated that the above further provides a method for applying shotcrete on a surface. Specifically, the method includes dispensing fresh concrete from a shotcrete nozzle assembly towards the surface to form a stream of fresh concrete. In the embodiment described above, dispensing the fresh concrete includes dispensing dry concrete ingredients through the central passageway 110 of the shotcrete nozzle assembly 100 and wetting the dry concrete ingredients as they pass through the shotcrete nozzle assembly. Alternatively, dispensing the fresh concrete could instead include operatively connecting the shotcrete nozzle assembly to a fresh concrete source to provide fresh concrete through the central passageway 110 of the shotcrete nozzle assembly 100.

The method further comprises directing pressurized air along a helicoidal airflow path twisting around the stream of fresh concrete to thereby accelerate a plurality of fresh concrete particles located in an outer layer of the stream of fresh concrete. In the embodiment described above, directing pressurized air along a helicoidal airflow includes guiding air through the helicoidal air conduits 322a, 322b, 322c, 322d defined in the body sidewall 108 extending peripherally around the central passageway 110. In one embodiment, the method could further comprise, before directing the pressurized air along the helicoidal airflow, operatively connecting an air inlet of the shotcrete nozzle assembly to a pressurized air source, the air inlet being in fluid communication with the helicoidal air conduits 322a, 322b, 322c, 322d.

Turning now to FIG. 13, there is shown a stream controlling section 500, in accordance with another embodiment. In this embodiment, the stream controlling section 500 is generally similar to the stream controlling section 300 and extends between an inlet end 502 and an outlet end 504. The inlet end 502 may be connectable to a concrete wetting section such as concrete wetting sections 200 or 200', or to a conventional concrete wetting section. Alternatively, the stream controlling section 500 may be used for wet-mix shotcrete, in which case the stream controlling section 500 may be operatively connectable directly to a fresh concrete source.

In the embodiment illustrated in FIG. 13, the stream controlling section 500 includes an air inlet manifold 506 located adjacent the inlet end 502 and an elongated nozzle tip portion 508 extending between the air inlet manifold 506 and the outlet end 504.

The nozzle tip portion 508 is substantially similar to the nozzle tip portion 302 described above and includes a nozzle tip sidewall 510 disposed around a central passageway 511. The nozzle tip sidewall 510 extends longitudinally between a first nozzle tip end 512 adjacent to the air inlet manifold 506 and a second nozzle tip end 514 opposite the first nozzle tip end 512. The nozzle tip sidewall 510 is hollow and includes a peripheral air conduit 516 which extends between the first and

second nozzle tip ends 512, 514. In the illustrated embodiment, the peripheral air conduit 516 includes a plurality of helicoidal air conduits for guiding the air from the air inlet manifold 506 in an helicoidal path around the central passageway 511.

In the embodiment illustrated in FIG. 13, the nozzle tip sidewall 510 further includes an inner sidewall face 550 facing inwardly towards the central passageway. Similarly to the nozzle tip portion 302 described above, the inner face 550 includes a mixing portion 552 configured for mixing the fresh concrete passing through the central passageway 511. Specifically, the mixing portion 552 includes a plurality of helicoidal mixing recesses 554 defined in the inner sidewall face 550. Alternatively, the mixing portion 552 could include only a single helicoidal mixing recess, or could include any other tridimensional feature which could allow the fresh concrete to be mixed.

In the embodiment illustrated in FIG. 13, instead of extending along an entire length of the stream controlling section 500, the mixing portion 552 extends between an inlet mixing portion end 556 located at the first nozzle tip end 512 and an outlet mixing portion end 558 located partway between the first and second nozzle tip ends 512, 514. In this embodiment, the nozzle tip sidewall 510 further comprises an outlet end portion 560 extending between the outlet mixing portion end 558 and the second nozzle tip end 514. Unlike the mixing portion 552, the outlet end portion 560 has a substantially smooth inner surface 562. This may further cause the stream of fresh concrete to adopt a substantially cylindrical shape when exiting the stream controlling section 500 and generally reduce a spread of the stream of fresh concrete as it exits the stream controlling section 500.

In one embodiment, the outlet end portion 560 has a length of between 1/4 and 1/3 of a total length of the nozzle tip portion 508. Alternatively, the outlet end portion 560 could have a different length.

Turning to FIG. 14, there is shown a stream controlling section 600, in accordance with another embodiment. The stream controlling section 600 is substantially similar to the stream controlling section 500 illustrated in FIG. 13. Specifically, the

stream controlling section 600 includes an inlet end 602, an outlet end 604, an air inlet manifold 606 located towards the inlet end 602 and a nozzle tip portion 608 extending between the air inlet manifold 606 and the outlet end 604. The nozzle tip portion 608 is substantially similar to the nozzle tip portion 508 described above and includes a nozzle tip sidewall 610 disposed around a central passageway 611. The nozzle tip sidewall 610 extends longitudinally between a first nozzle tip end 612 adjacent to the air inlet manifold 606 and a second nozzle tip end 614 opposite the first nozzle tip end 612. The nozzle tip sidewall 610 is hollow and includes a peripheral air conduit 616 which extends between the first and second nozzle tip ends 612, 614. In the illustrated embodiment, the peripheral air conduit 616 includes a plurality of helicoidal air conduits for guiding the air from the air inlet manifold 606 in an helicoidal path around the central passageway 611.

In this embodiment, the stream controlling section 600 further includes a stream accelerating portion 650 extending away from the outlet end 604 for accelerating the stream of fresh concrete and the air exiting the nozzle tip portion 608. Specifically, the stream accelerating portion 650 is distinct from the nozzle tip portion 608 and includes a proximal accelerating portion end 652 connectable to the outlet end 604 and a distal accelerating portion end 654 located away from the proximal accelerating portion end 652. The stream accelerating portion 650 further includes an accelerating portion peripheral sidewall 656 extending between the proximal and distal accelerating portion ends 652, 654 and defining a central accelerating conduit 658. In the embodiment illustrated in FIG. 14, when the stream accelerating portion 650 is connected to the nozzle tip portion 608, the central accelerating conduit 658 extends coaxially to the central passageway 611. Both the proximal and distal accelerating portion ends 652, 654 are open to allow the fresh concrete and the air exiting the outlet end 604 to pass through the central accelerating conduit 658 and be projected onto a surface through the distal accelerating portion end 654.

As shown in FIG. 14, the central accelerating conduit 658 tapers from the proximal accelerating portion end 652 towards the distal accelerating portion end 654.

Specifically, the central accelerating conduit 658 has a first cross-sectional area at the proximal accelerating portion end 652 and a second cross-sectional area at the distal accelerating portion end 654 which is smaller than the first cross-sectional area. For example, the second cross-sectional area may be between about 1/3 and 1/2 of the first cross-sectional area. It will be appreciated that this reduction in cross-sectional area accelerates fluid, i.e. fresh concrete and air, as it passes through the stream accelerating portion 650.

It will be understood that although the stream accelerating portion 650 is shown in FIG. 14 as being distinct from the nozzle tip portion 608, the stream accelerating portion 650 and the nozzle tip portion 608 could instead be integrally formed together.

Referring now to FIG. 15, there is shown a stream controlling section 700, in accordance with yet another embodiment. The stream controlling section 700 is generally similar to the stream controlling section 300 described above and includes an inlet end 702, an outlet end 704, an air inlet manifold 706 located towards the inlet end 702 and a nozzle tip portion 708 extending between the air inlet manifold 706 and the outlet end 704.

The nozzle tip portion 708 is substantially similar to the nozzle tip portion 310 illustrated in FIG. 10 and includes a nozzle tip sidewall 710 disposed around a central passageway 711. The nozzle tip sidewall 710 extends longitudinally between a first nozzle tip end 712 adjacent to the air inlet manifold 706 and a second nozzle tip end 714 opposite the first nozzle tip end 712. The nozzle tip sidewall 710 is hollow and includes a peripheral air conduit 716 which extends between the first and second nozzle tip ends 712, 714. In the illustrated embodiment, the peripheral air conduit 716 includes a plurality of helicoidal air conduits 718 for guiding the air from the air inlet manifold 706 in an helicoidal path around the central passageway 711.

In this embodiment, each helicoidal air conduit 718 includes an air accelerating portion 750 for accelerating the air as it passes through the helicoidal air conduits

718. In one embodiment, the air accelerating portion 750 extends between a first accelerating portion end 752 and a second accelerating portion end 754 and tapers between the first and second accelerating portion ends 752, 754. In other words, the air accelerating portion 750 has a first cross-sectional area at the first accelerating portion end 752 and a second cross-sectional area at the second accelerating portion end 754 which is smaller than the first cross-sectional area.

Alternatively, instead of the air accelerating portion 750 being defined in the helicoidal air conduits 718, all the helicoidal air conduits 718 may be in communication with an annular outlet chamber which would be located at the second nozzle tip end 714 and which would be tapered to accelerate the air.

In the illustrated embodiment, the nozzle tip portion 708 further includes an extension portion 760 which extends beyond the air accelerating portion 750. Specifically, in this embodiment, the interior diameter of the extension portion 760 substantially corresponds to the interior diameter of the central passageway 711. Alternatively, the extension portion 760 could be tapered to further accelerate the air exiting the helicoidal air conduits 718 and to accelerate the stream of fresh concrete, similarly to the stream accelerating portion 650 described above.

While the above description provides examples of the embodiments, it will be appreciated that some features and/or functions of the described embodiments are susceptible to modification without departing from the spirit and principles of operation of the described embodiments. Accordingly, what has been described above has been intended to be illustrative and non-limiting and it will be understood by persons skilled in the art that other variants and modifications may be made without departing from the scope of the invention as defined in the claims appended hereto.

CLAIMS

1. A shotcrete nozzle assembly comprising:

a tubular body having an open inlet body end, an open outlet body end and a body sidewall defining a central passageway extending between the inlet and outlet body ends, the inlet body end being operatively connectable to a concrete source for providing dry concrete ingredients through the central passageway, the tubular body including:

a concrete wetting section extending from the inlet body end towards the outlet body end for mixing the dry concrete ingredients inside the central passageway with water to form fresh concrete; and

a stream controlling section extending from the concrete wetting section to the outlet body end for controlling a stream of fresh concrete projected from the outlet body end, the stream controlling section including at least one helicoidal conduit defined within the body sidewall and extending helicoidally around the central conduit between an air inlet end and an air outlet end located towards the outlet body end, the air inlet end being operatively connectable to a pressurized air source to force air through the helicoidal conduit and out the air outlet end, each helicoidal conduit being twisted around the central passageway to guide the pressurized air exiting through the air outlet end along an helicoidal path extending away from the outlet body end and around the stream of fresh concrete exiting the outlet body end.

2. The assembly as claimed in claim 1, wherein the at least one helicoidal air conduit includes a plurality of helicoidal air conduits.

3. The assembly as claimed in claim 2, wherein the plurality of helicoidal air conduits includes between two and eight helicoidal air conduits.

4. The assembly as claimed in claim 3, wherein the plurality of helicoidal air conduits includes four helicoidal air conduits.

5. The assembly as claimed in claim 4, wherein the conduit inlets of the helicoidal air conduits are angularly offset relative to each other around the central passageway by an angular offset angle of 90 degrees relative to each other.

6. The assembly as claimed in any of claims 2 and 3, wherein the helicoidal air conduits are angularly offset relative to each other around the central passageway.

7. The assembly as claimed in any of claims 2 to 6, wherein the helicoidal air conduits extend between the air inlet end and an air outlet end while remaining equidistant to each other.

8. The assembly as claimed in any of claims 2 to 7, wherein all the helicoidal air conduits have a substantially similar size and shape.

9. The assembly as claimed in any one of claims 1 to 8, wherein the body sidewall further includes an inner face facing inwardly towards the central passageway, the inner face including a mixing portion configured for mixing the fresh concrete passing through the central passageway.

10. The assembly as claimed in claim 9, wherein the mixing portion includes at least one helicoidal mixing recess defined in the inner face.

11. The assembly as claimed in any one of claims 9 and 10, wherein the mixing portion extends along an entire length of the stream controlling section.

12. The assembly as claimed in any one of claims 9 and 10, wherein the mixing portion extends between an inlet mixing portion end located at an inlet controlling section end of the stream controlling section and an outlet mixing portion end located partway between the inlet stream controlling section end and an outlet stream controlling section end of the stream controlling section, the body sidewall further comprising an outlet end portion extending between the outlet

mixing portion end and the outlet stream controlling section end, the outlet end portion having a substantially smooth inner surface.

13. The assembly as claimed in any one of claims 1 to 12, wherein the stream controlling section further includes a stream accelerating portion extending away from the outlet end for accelerating the stream of fresh concrete and the air exiting the nozzle tip portion.

14. The assembly as claimed in claim 13, wherein the stream accelerating portion includes a proximal accelerating portion end located at the outlet body end, a distal accelerating portion end located away from the proximal accelerating portion end and an accelerating portion peripheral sidewall extending between the proximal and distal accelerating portion ends, the accelerating portion peripheral sidewall defining a central accelerating conduit extending coaxially to the central passageway, the central accelerating conduit tapering from the proximal accelerating portion end to the distal accelerating portion end.

15. The assembly as claimed in claim 14, wherein the stream accelerating portion is removable from the body sidewall.

16. The assembly as claimed in any one of claims 1 to 15, wherein the stream controlling section includes an air accelerating portion for accelerating the air passing through the at least one helicoidal conduit.

17. The assembly as claimed in any one of claims 1 to 16, wherein the at least one helicoidal air conduits are isolated from the central passageway.

18. The assembly as claimed in any one of claims 1 to 17, wherein the stream controlling section further includes an air inlet manifold having an annular manifold inner conduit in fluid communication with the at least one helicoidal air conduit to distribute the air from the pressurized air source towards all of the at least one helicoidal air conduit.

19. The assembly as claimed in claim 18, wherein the air manifold further includes an air inlet opening operatively connected to the pressurized air source,

the air inlet opening defining a manifold opening axis, the air inlet opening being positioned such that the manifold opening axis is offset relative to the center of the central passageway and extends generally tangentially relative to the central passageway so as to guide the air from the pressurized air source into the air manifold in a tangential direction relative to the central passageway.

20. A stream controlling device for controlling a stream of fresh concrete projected from a shotcrete nozzle assembly, the shotcrete nozzle assembly being operatively connectable to a fresh concrete source, the device comprising:

a tubular body having an open inlet body end, an open outlet body end and a body sidewall defining a central passageway extending between the inlet and outlet body ends, the inlet body end being operatively connectable to the shotcrete nozzle assembly for providing the fresh concrete through the central passageway and out of the outlet body end, the tubular body further including at least one helicoidal conduit defined within the body sidewall and extending helicoidally around the central conduit between an air inlet end and an air outlet end coinciding with the outlet body end, the air inlet end being operatively connectable to a pressurized air source to force air through the helicoidal conduit, each helicoidal conduit being twisted around the central passageway to guide the pressurized air exiting through the air outlet end along an helicoidal path extending out from the outlet body end and around the stream of fresh concrete exiting the outlet body end.

21. The assembly as claimed in claim 20, wherein the at least one helicoidal air conduit includes a plurality of helicoidal air conduits.

22. The assembly as claimed in claim 21, wherein the plurality of helicoidal air conduits includes between two and eight helicoidal air conduits.

23. The assembly as claimed in claim 22, wherein the plurality of helicoidal air conduits includes four helicoidal air conduits.

24. The assembly as claimed in claim 23, wherein the conduit inlets of the helicoidal air conduits are angularly offset relative to each other around the central passageway by an angular offset angle of 90 degrees relative to each other.

25. The assembly as claimed in any of claims 21 and 22, wherein the helicoidal air conduits are angularly offset relative to each other around the central passageway.

26. The assembly as claimed in any of claims 21 to 25, wherein the helicoidal air conduits extend between the air inlet end and an air outlet end while remaining equidistant to each other.

27. The assembly as claimed in any of claims 21 to 26, wherein all the helicoidal air conduits have a substantially similar size and shape.

28. The assembly as claimed in any one of claims 20 to 27, wherein the body sidewall further includes an inner face facing inwardly towards the central passageway, the inner face including a mixing portion configured for mixing the fresh concrete passing through the central passageway.

29. The assembly as claimed in claim 28, wherein the mixing portion includes at least one helicoidal mixing recess defined in the inner face.

30. The assembly as claimed in any one of claims 28 and 29, wherein the mixing portion extends along an entire length of the tubular body.

31. The assembly as claimed in any one of claims 28 and 29, wherein the mixing portion extends between an inlet mixing portion end located at the inlet body end of the tubular body and an outlet mixing portion end located partway between the inlet and outlet body ends, the body sidewall further comprising an outlet end portion extending between the outlet mixing portion end and the outlet body end, the outlet end portion having a substantially smooth inner surface.

32. The assembly as claimed in any one of claims 20 to 31, further comprising a stream accelerating portion extending away from the outlet body end for accelerating the stream of fresh concrete and the air exiting the tubular body.

33. The assembly as claimed in claim 32, wherein the stream accelerating portion includes a proximal accelerating portion end located at the outlet body end, a distal accelerating portion end located away from the proximal accelerating portion end and an accelerating portion peripheral sidewall extending between the proximal and distal accelerating portion ends, the accelerating portion peripheral sidewall defining a central accelerating conduit extending coaxially to the central passageway, the central accelerating conduit tapering from the proximal accelerating portion end to the distal accelerating portion end.

34. The assembly as claimed in claim 33, wherein the stream accelerating portion is removable from the body sidewall.

35. The assembly as claimed in any one of claims 20 to 34, further comprising an air accelerating portion for accelerating the air passing through the at least one helicoidal conduit.

36. The assembly as claimed in any one of claims 20 to 35, wherein the at least one helicoidal air conduits are isolated from the central passageway.

37. The assembly as claimed in any one of claims 20 to 36, further comprising an air inlet manifold having an annular manifold inner conduit in fluid communication with the at least one helicoidal air conduit to distribute the air from the pressurized air source towards all of the at least one helicoidal air conduit.

38. The assembly as claimed in claim 37, wherein the air manifold further includes an air inlet opening operatively connected to the pressurized air source, the air inlet opening defining a manifold opening axis, the air inlet opening being positioned such that the manifold opening axis is offset relative to the center of the central passageway and extends generally tangentially relative to the central

passageway so as to guide the air from the pressurized air source into the air manifold in a tangential direction relative to the central passageway.

39. A method for applying shotcrete on a surface, the method comprising:

dispensing fresh concrete from a shotcrete nozzle assembly towards the surface to form a stream of fresh concrete;

directing pressurized air along a helicoidal airflow path twisting around the stream of fresh concrete to thereby accelerate a plurality of fresh concrete particles located in an outer layer of the stream of fresh concrete.

40. The method as claimed in claim 39, wherein dispensing the fresh concrete includes dispensing the fresh concrete through a central passageway of the shotcrete nozzle assembly.

41. The method as claimed in claim 40, wherein dispensing the fresh concrete includes dispensing dry concrete ingredients through the central passageway and wetting the dry concrete ingredients passing through the shotcrete nozzle assembly.

42. The method as claimed in any one of claims 40 and 41, wherein directing pressurized air along a helicoidal airflow includes guiding air through at least one helicoidal air conduit defined in a body sidewall extending peripherally around the central passageway.

43. The method as claimed in claim 42 further comprising, before directing the pressurized air along the helicoidal airflow, operatively connecting an air inlet of the shotcrete nozzle assembly to a pressurized air source, the air inlet being in fluid communication with the at least one helicoidal air conduits.

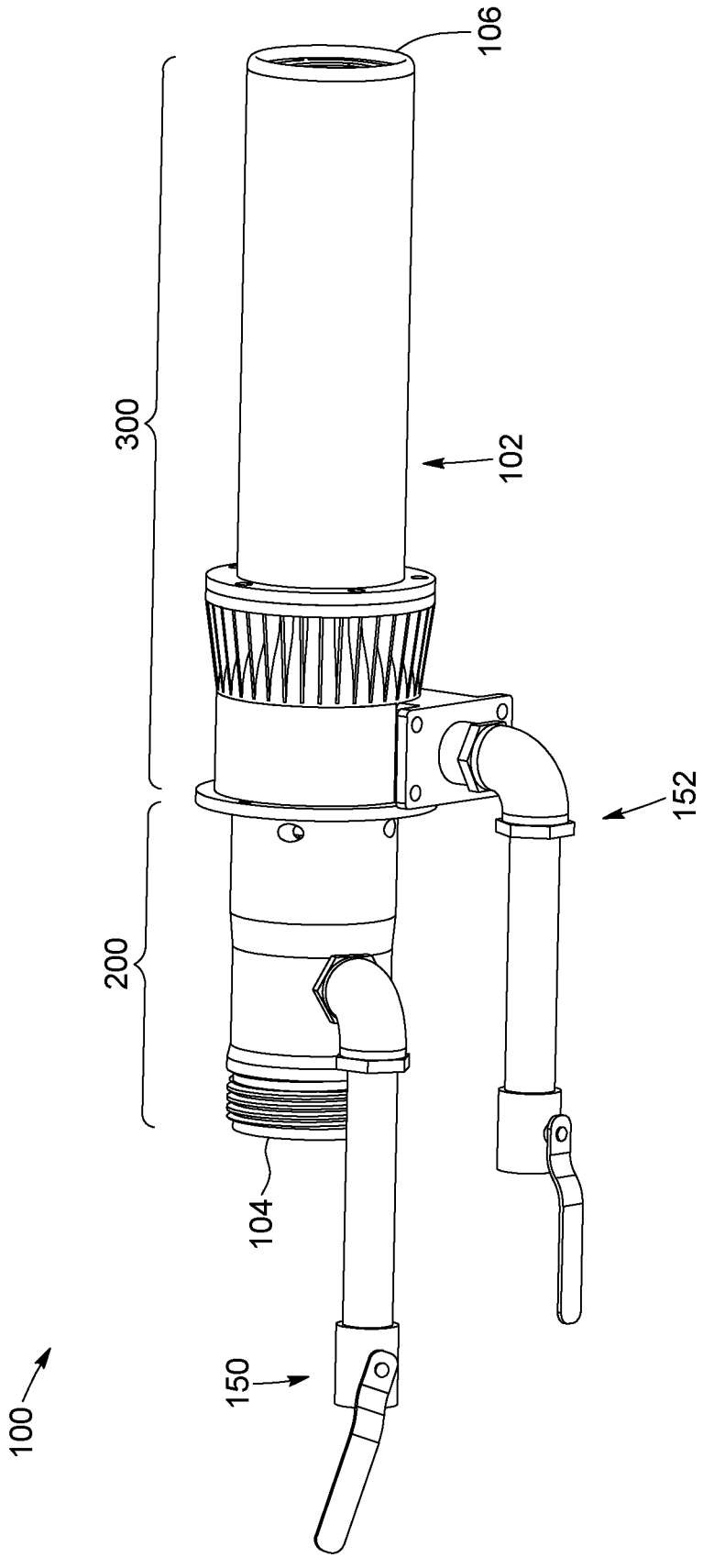

FIG. 1

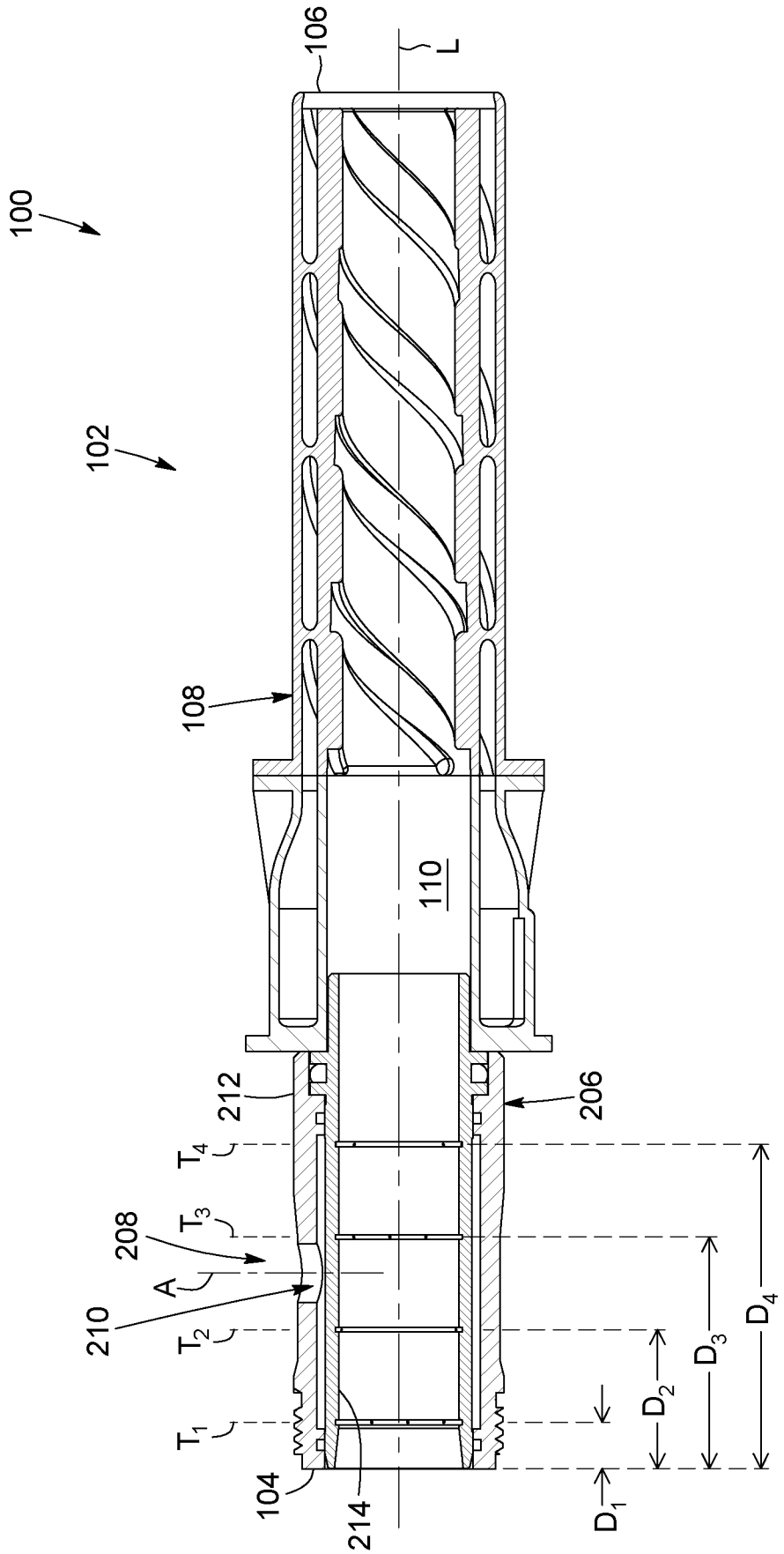
100
102
106
L
108
110
212
206
T_4
T_3
208
A
210
T_2
T_1
104
214
D_1
D_2
D_3
D_4

FIG. 2

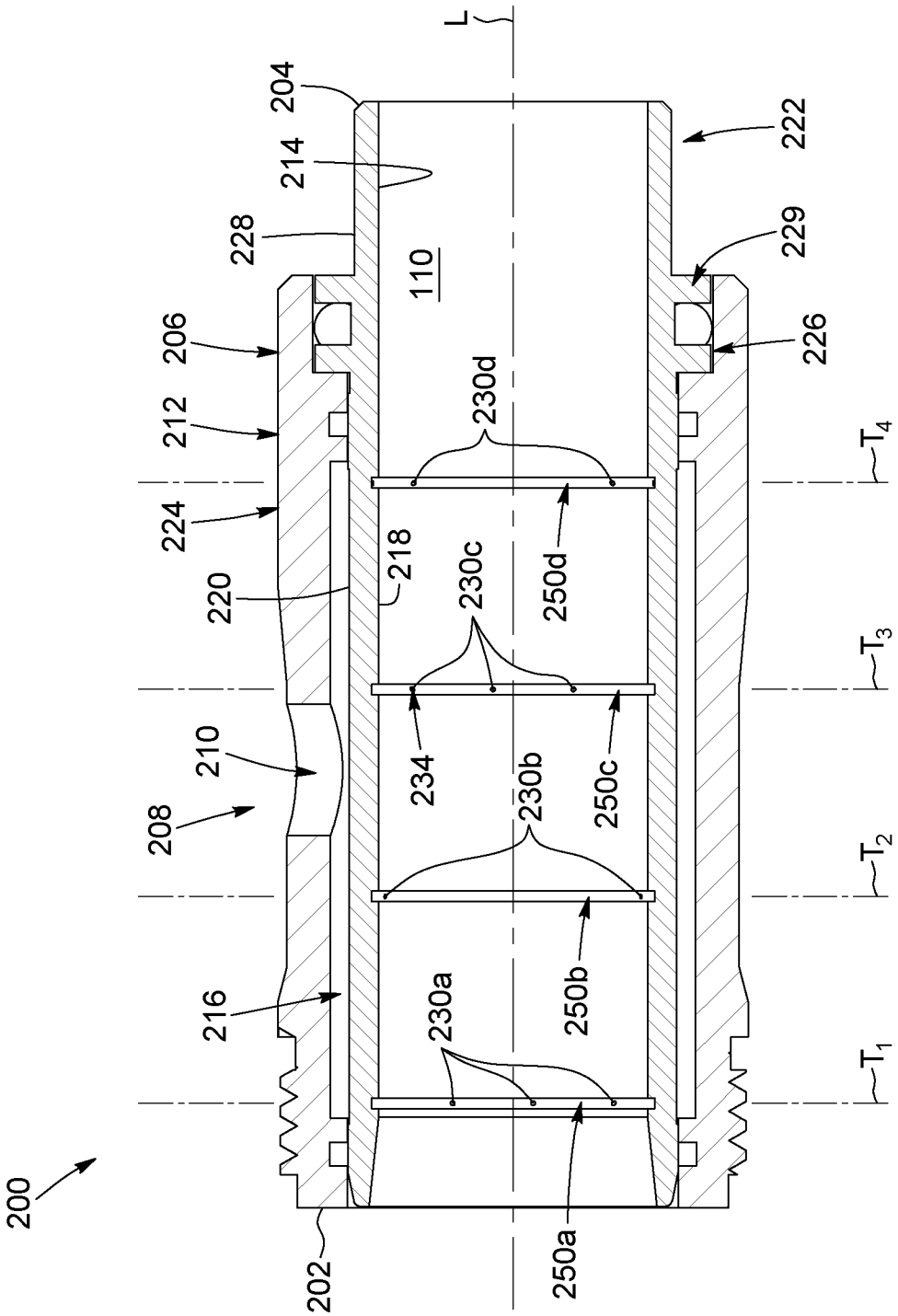
L
204
214
228
110
222
229
226
206
212
224
220
218
230d
250d
230c
234
230b
250c
210
208
216
230a
250b
200
202
250a
T4
T3
T2
T1

FIG. 3

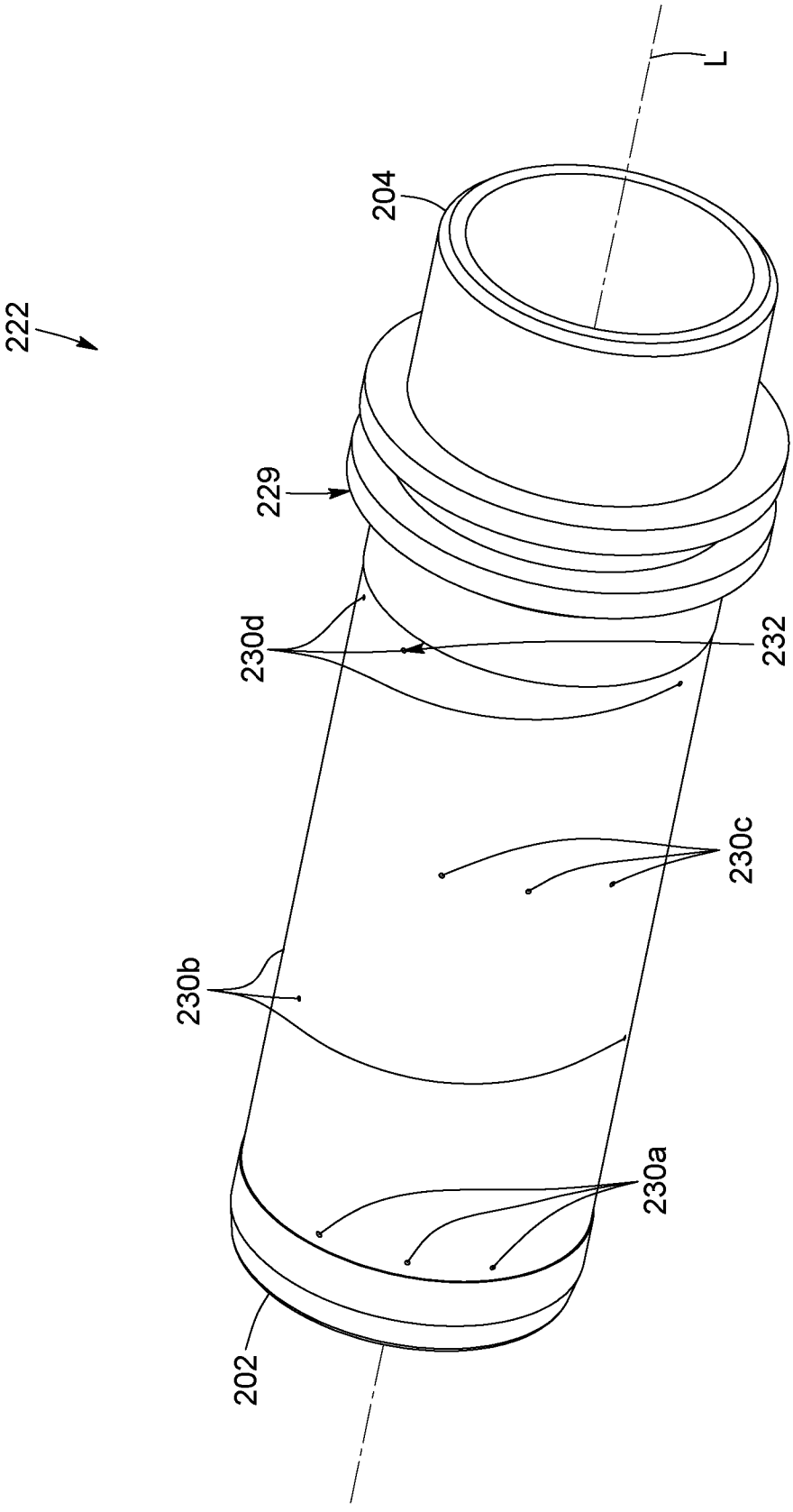

FIG. 4A

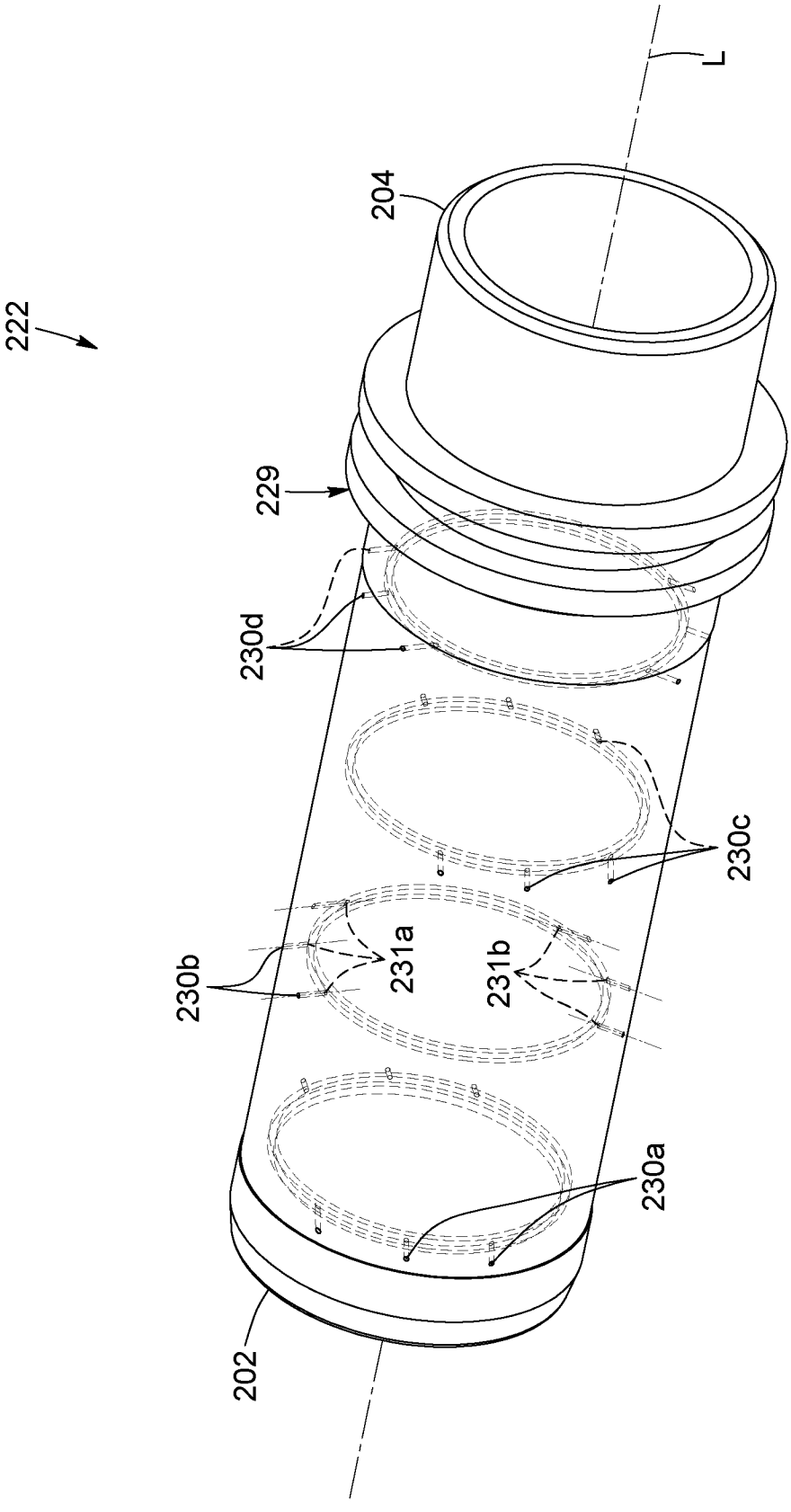

FIG. 4B

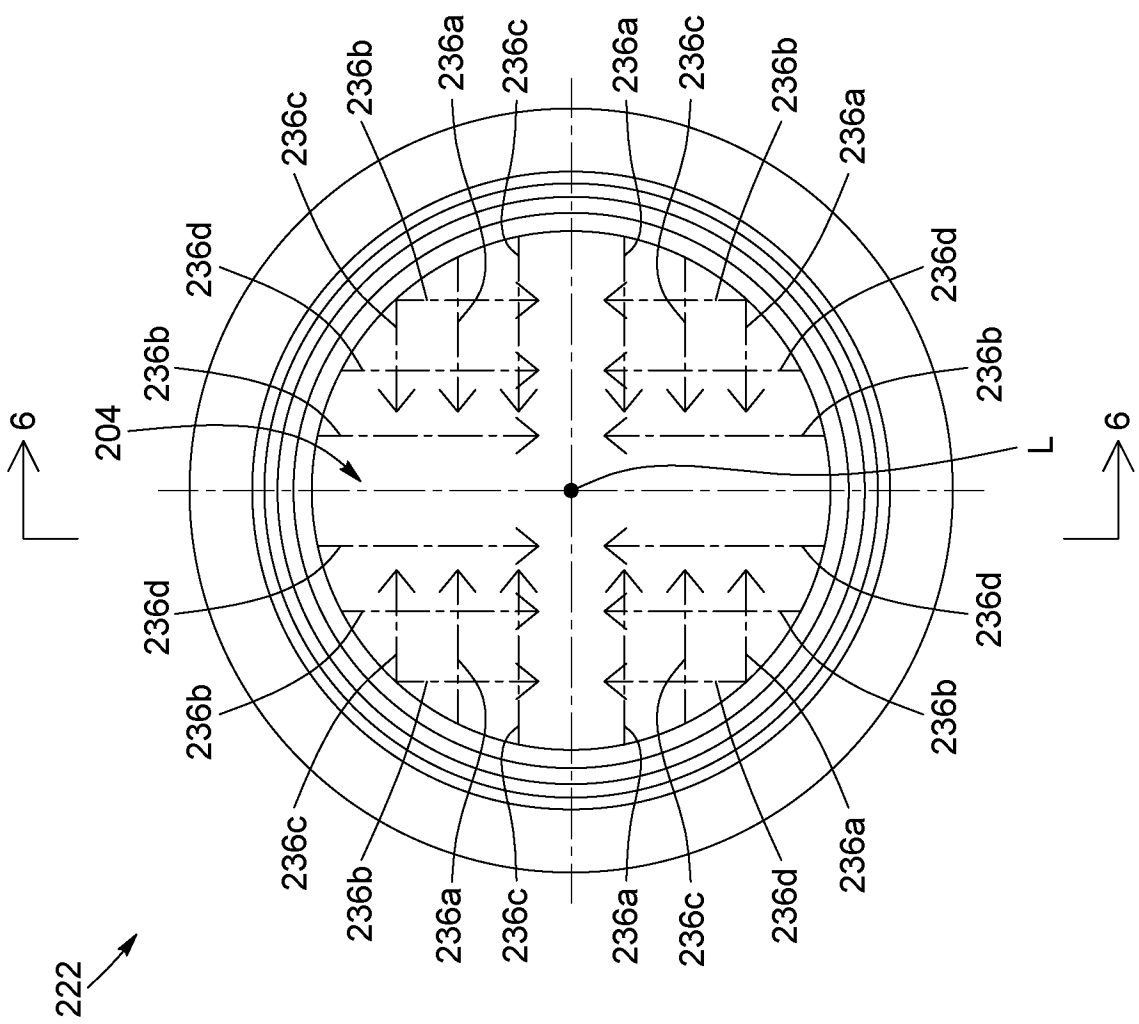

FIG. 5

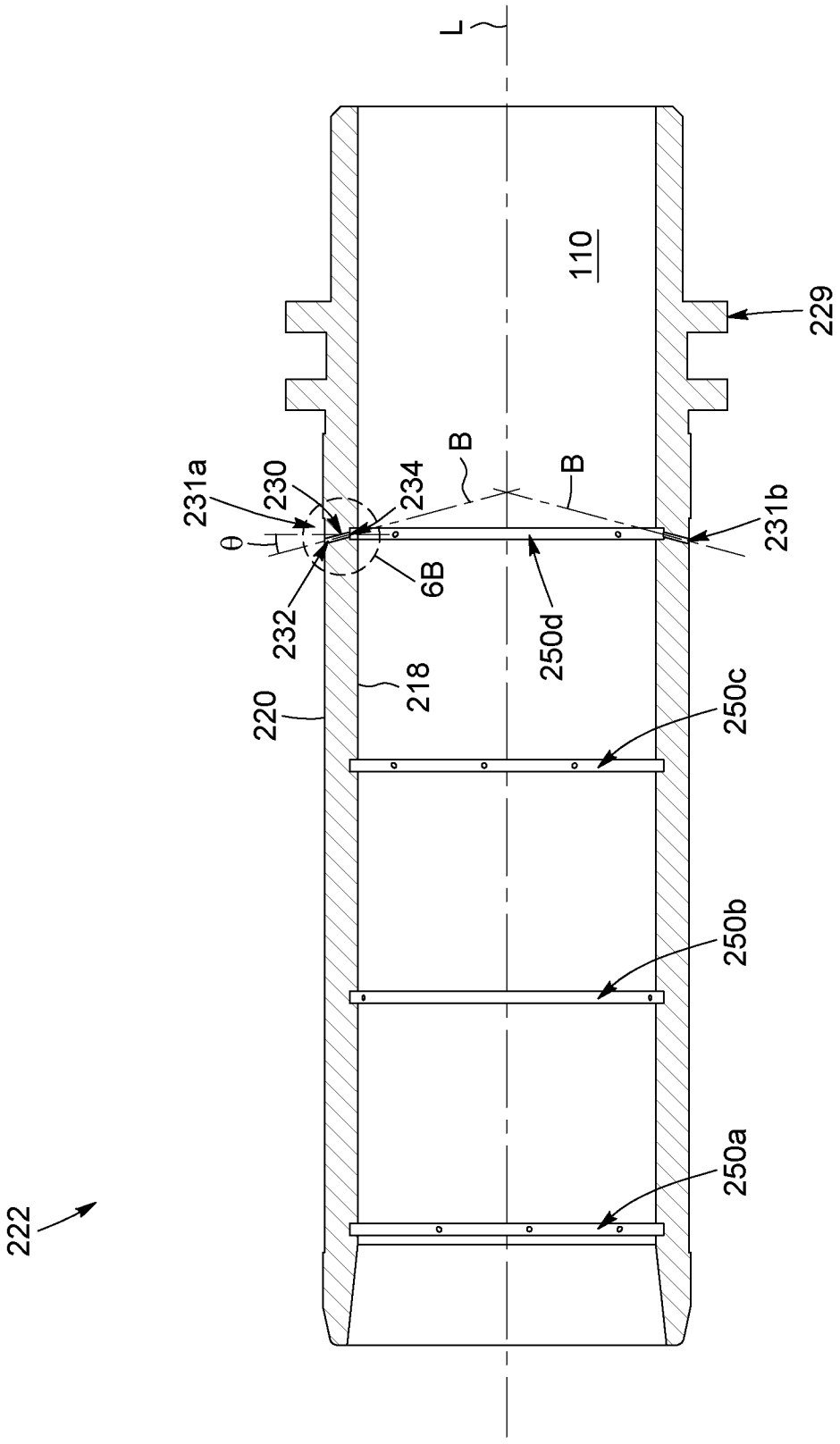
L
110
229
231a
230
234
B
B
231b
θ
6B
232
250d
218
220
250c
250b
250a
222

FIG. 6A

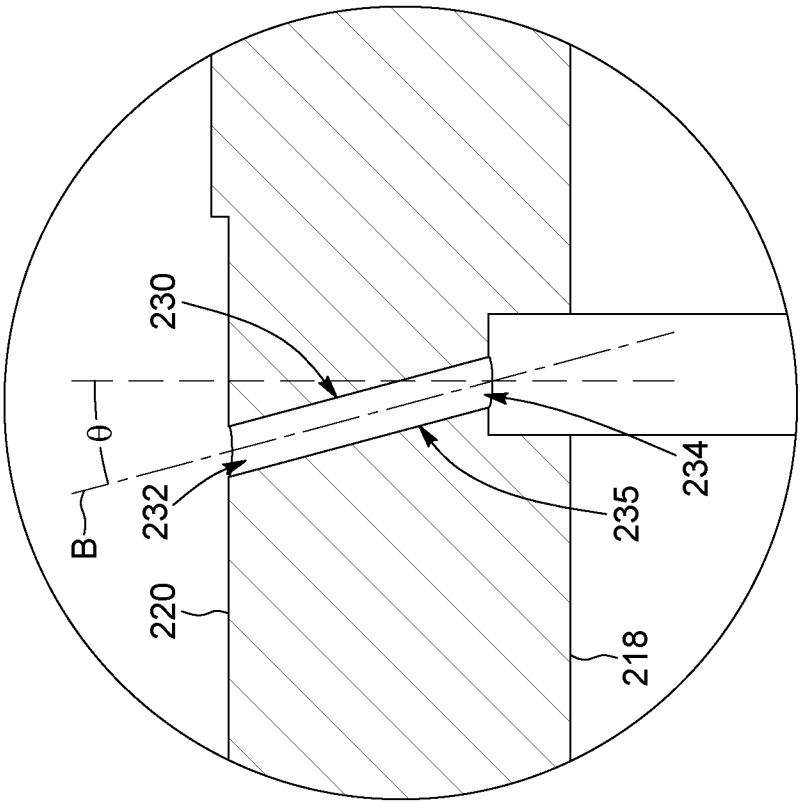

FIG. 6B

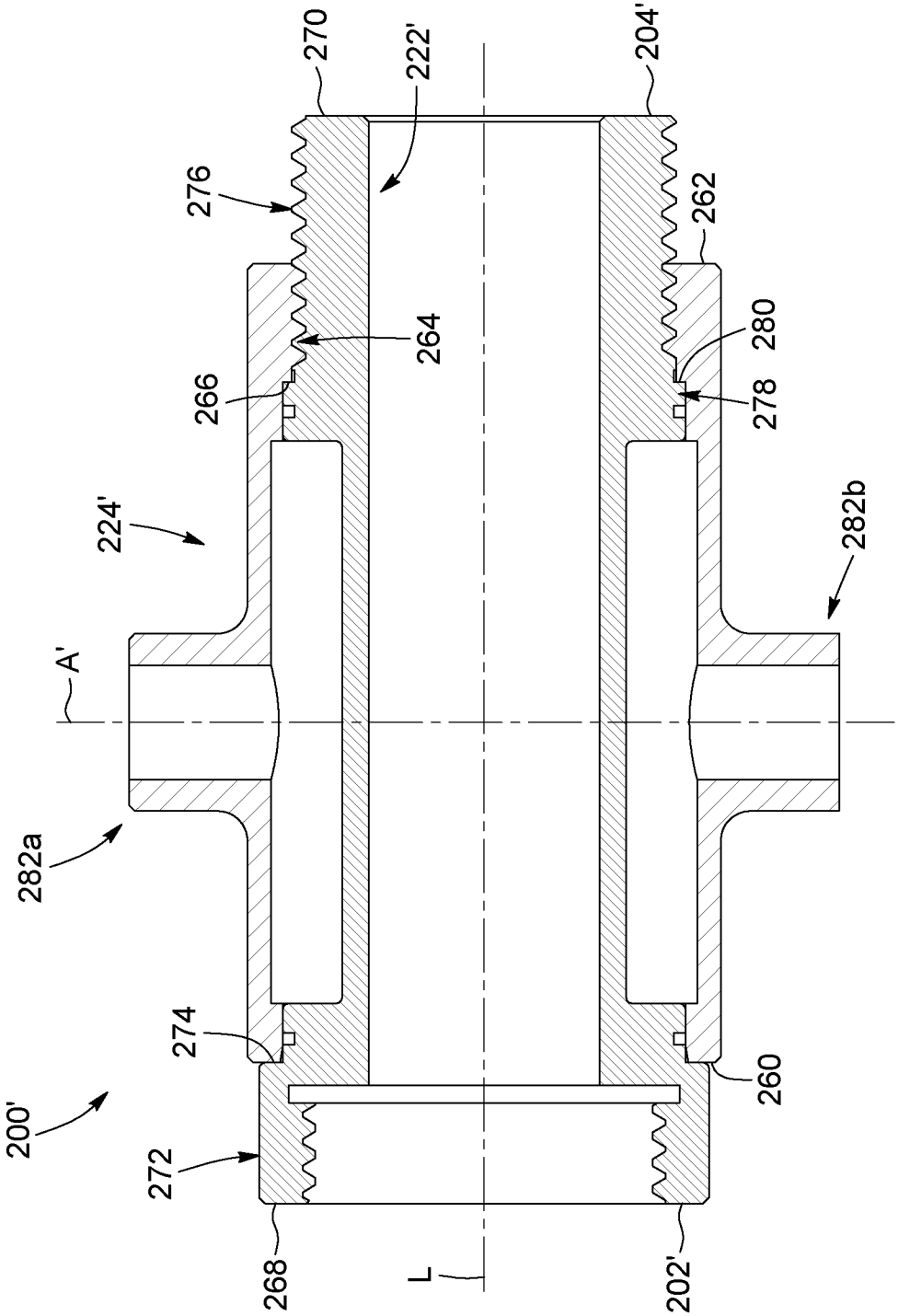
270
222'
204'
276
262
264
280
266
278
224'
282b
A'
282a
274
260
200'
272
268
L
202'

FIG. 7

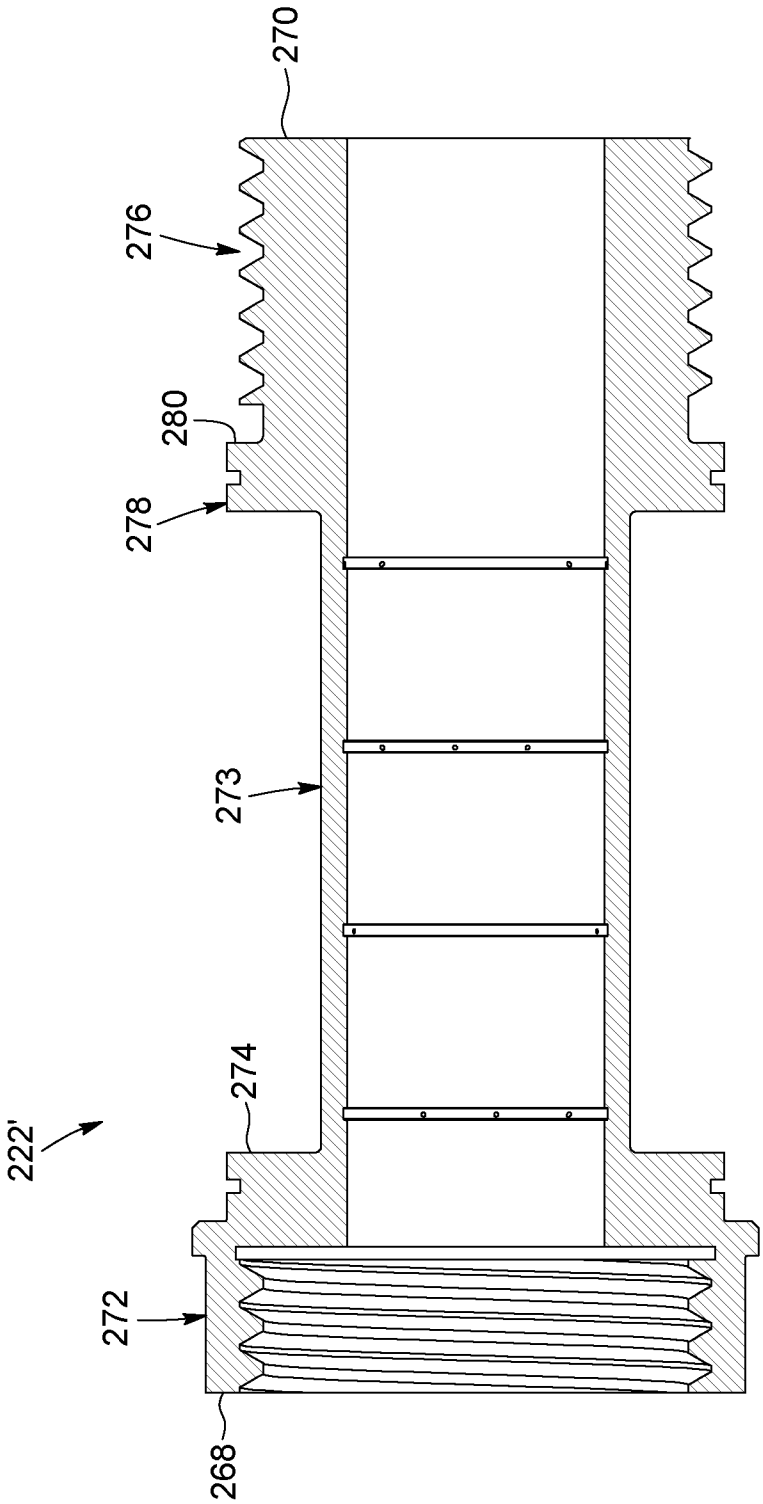

FIG. 8

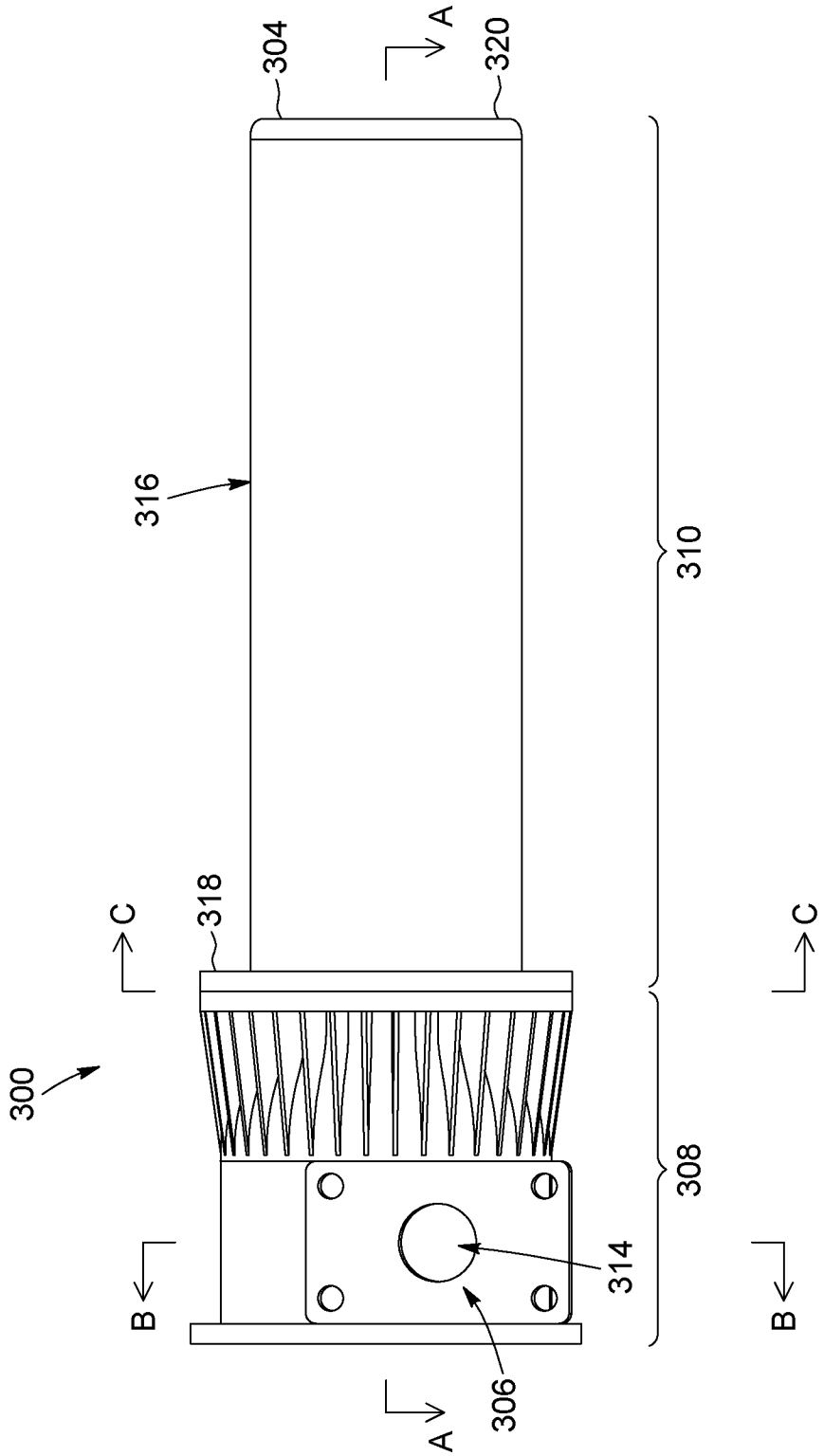

FIG. 9

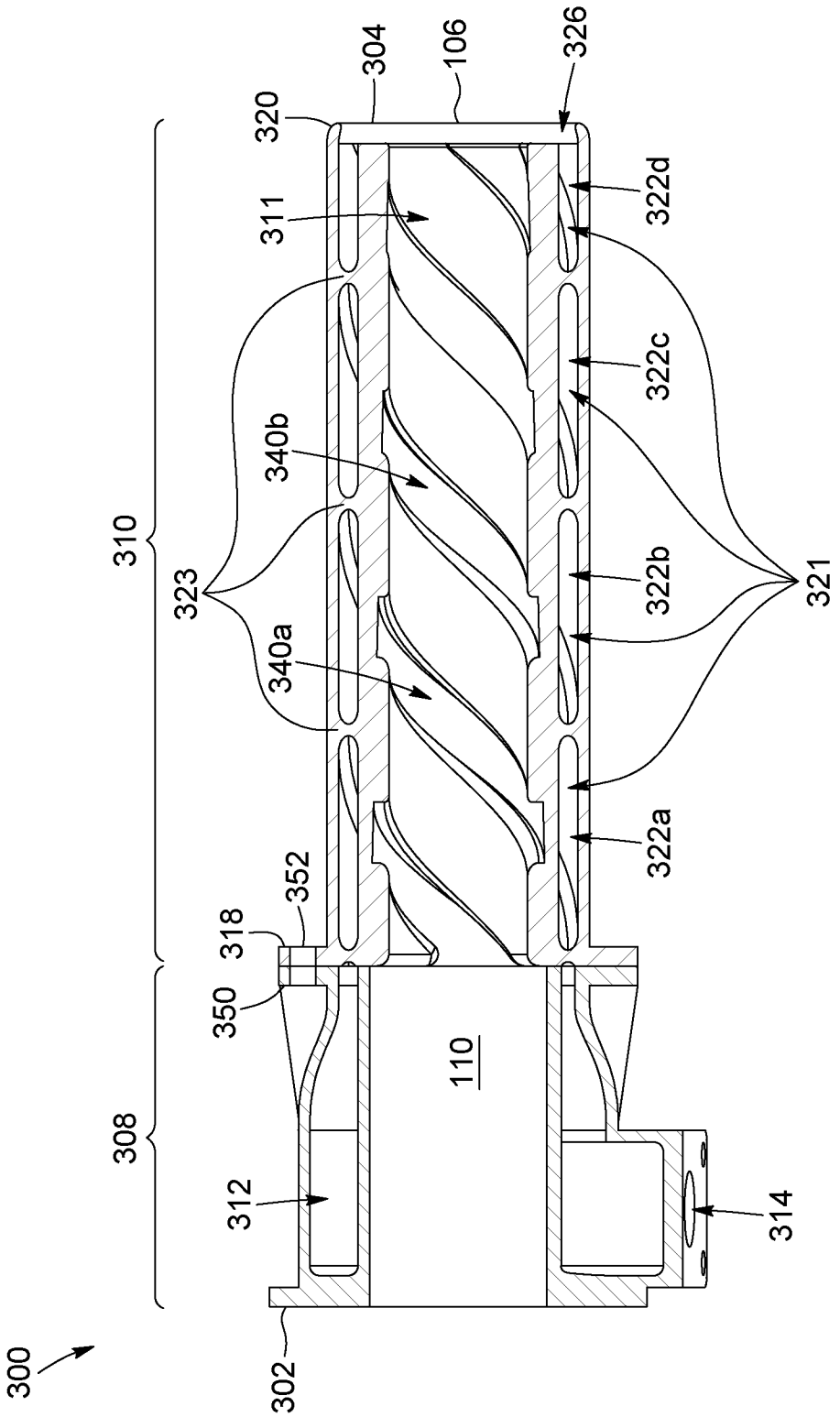
304
106
326
320
311
322d
322c
340b
310
323
322b
321
340a
322a
352
318
350
110
308
312
314
300
302

FIG. 10

FIG. 11

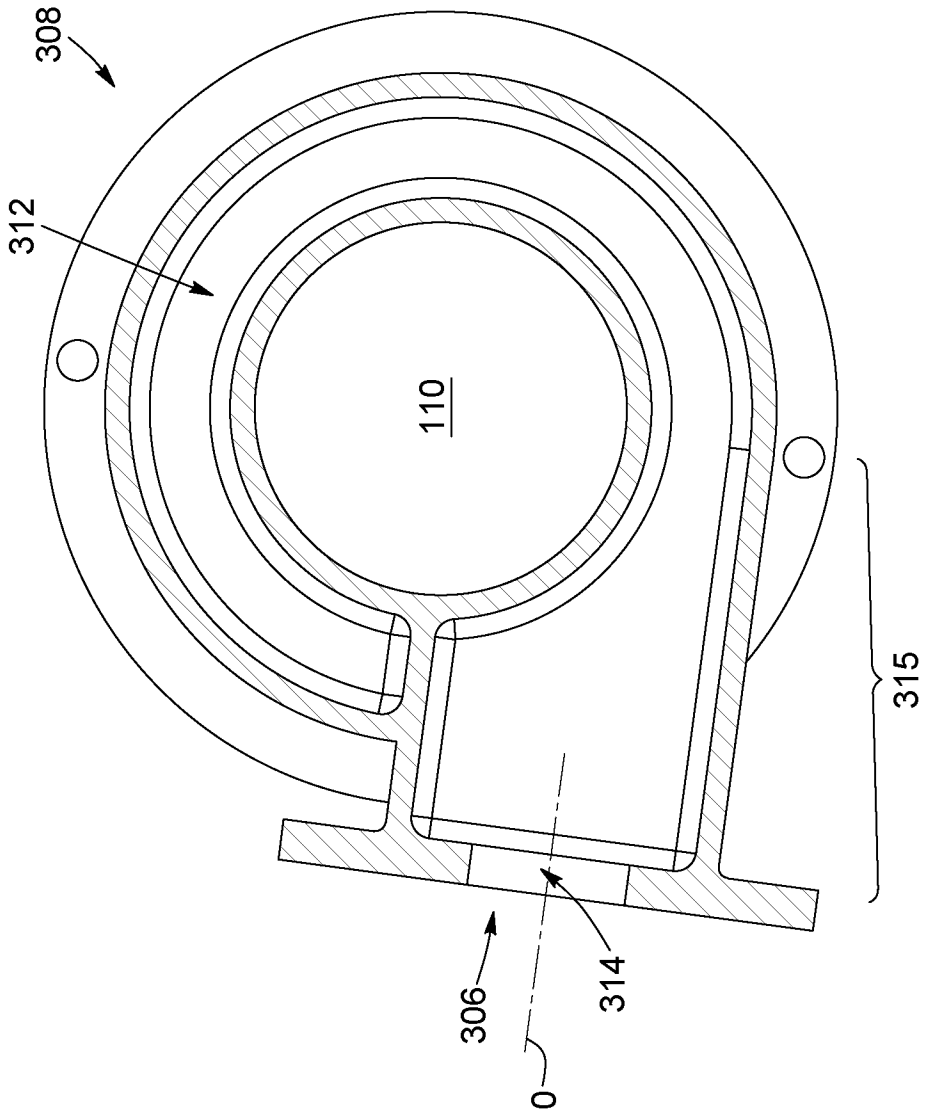

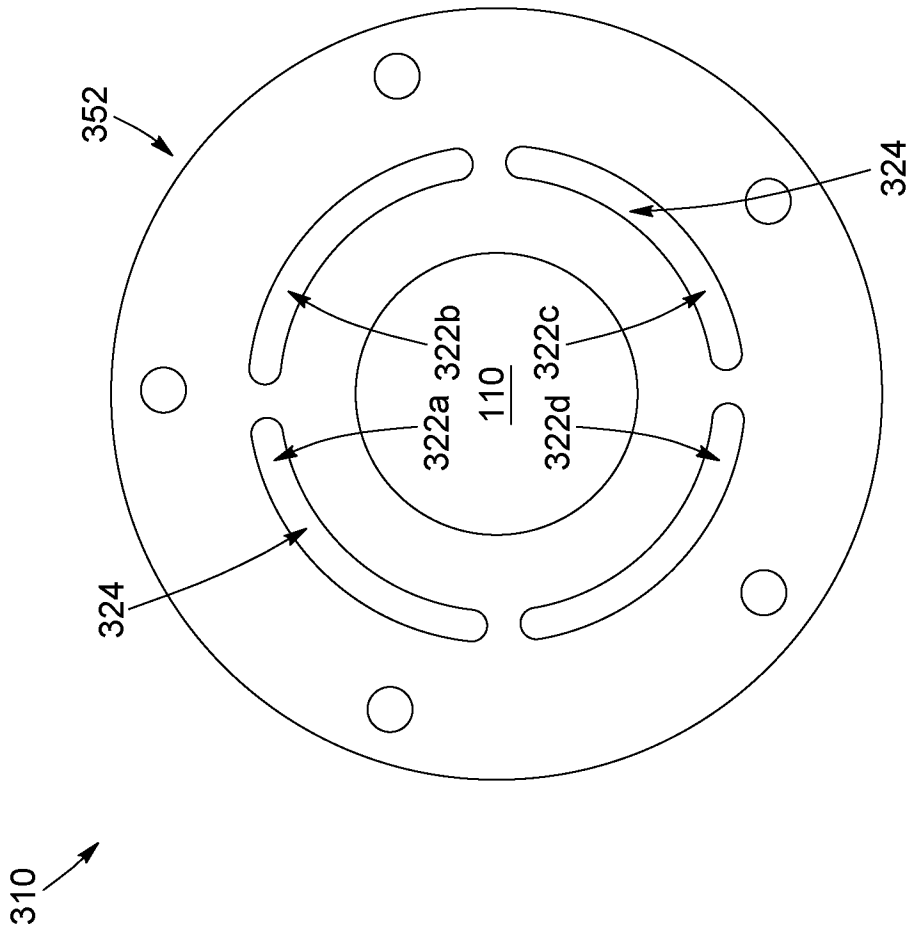

FIG. 12

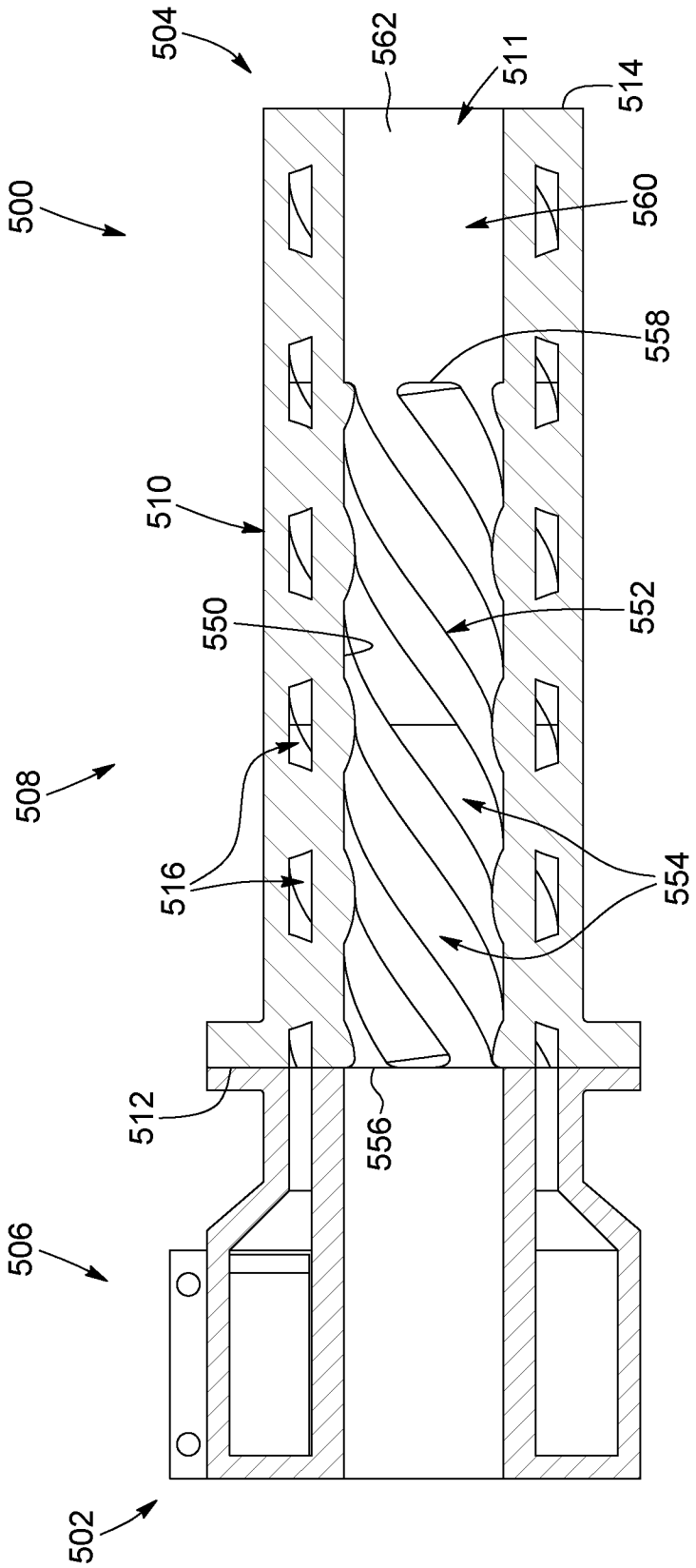
504
562
511
514
500
560
558
510
550
552
508
516
554
512
556
506
502

FIG. 13

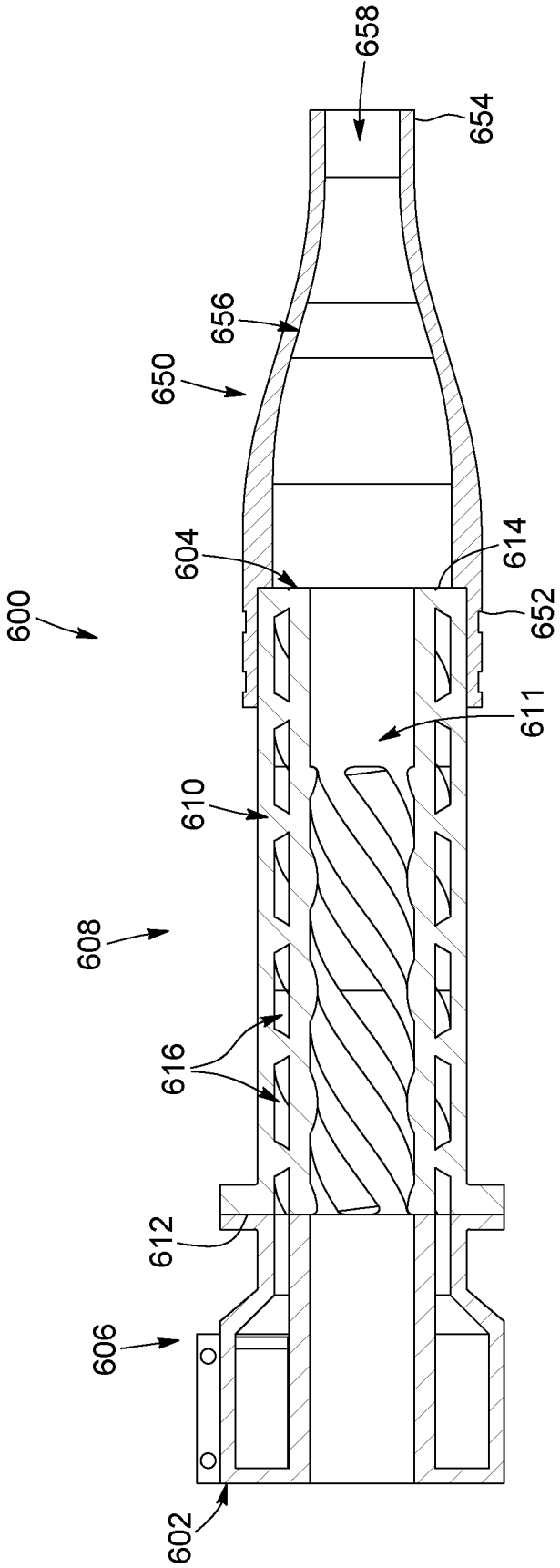

FIG. 14

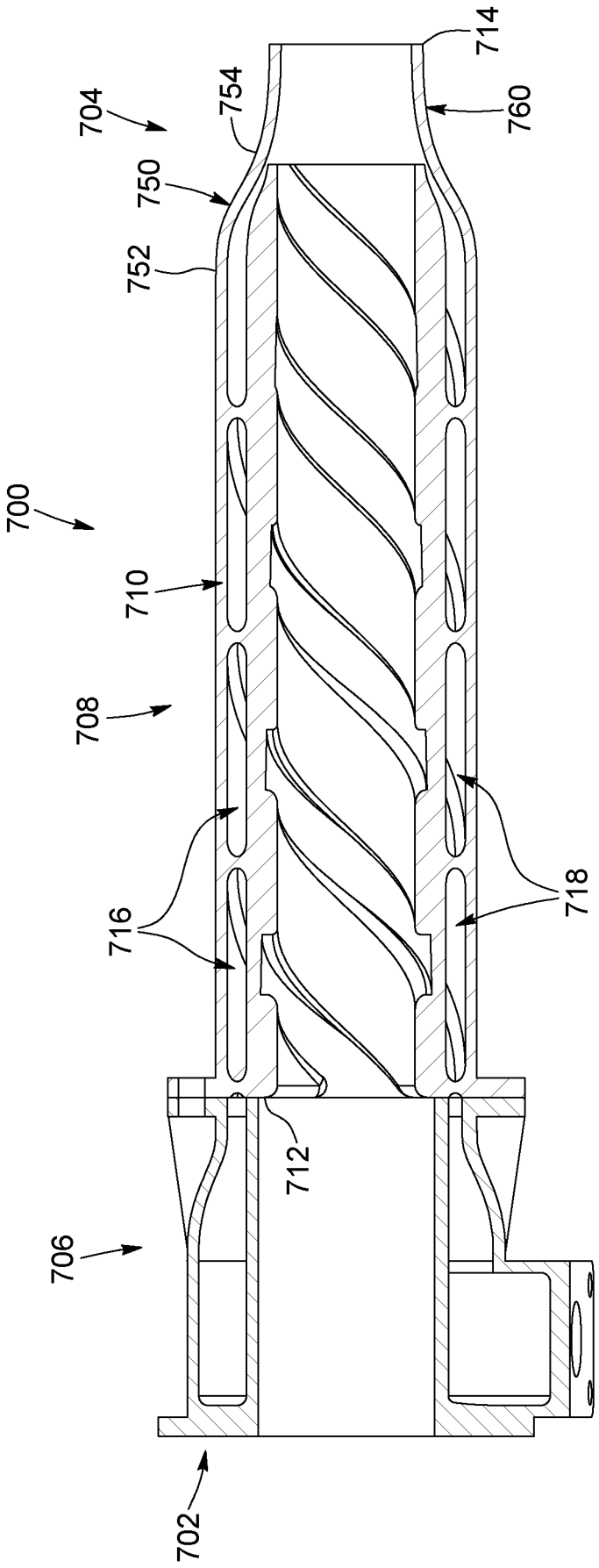

FIG. 15

INTERNATIONAL SEARCH REPORT

International application No.
PCT/CA2020/050214

A. CLASSIFICATION OF SUBJECT MATTER
IPC: ***B28C 7/16*** (2006.01) , ***B05B 7/04*** (2006.01) , ***B28C 5/06*** (2006.01) , ***B28C 7/04*** (2006.01)

According to International Patent Classification (IPC) or to both national classification and IPC

B. FIELDS SEARCHED

Minimum documentation searched (classification system followed by classification symbols)
IPC: B28C (2006.01); B05B (2006.01)

Documentation searched other than minimum documentation to the extent that such documents are included in the fields searched

Electronic database(s) consulted during the international search (name of database(s) and, where practicable, search terms used)
Canadian Patents Database; Questel-Orbit; Google Patents
Keywords: shotcrete, nozzle, stream, helical, conduit, air, concrete

C. DOCUMENTS CONSIDERED TO BE RELEVANT

Category*	Citation of document, with indication, where appropriate, of the relevant passages	Relevant to claim No.
X Y	CN208512834 (Liu X.) 19 February 2019 (19-02-2019) *Figure 2, par. 0006; items 1-3, 11, 21, 51*	1, 9-16, 20, 28-35, 39-43 2-8, 17-19, 21-27, 36-38
Y	CN206199545 (Wang H.) 31 May 2017 (31-05-2017) *Figures 1 and 2*	2-8, 17-19, 21-27, 36-38
A	JP11270799 (Gen A. A. et al.) 05 October 1999 (05-10-1999) *see whole document*	1, 20, 39

☐ Further documents are listed in the continuation of Box C.

☑ See patent family annex.

*	Special categories of cited documents:
"A"	document defining the general state of the art which is not considered to be of particular relevance
"D"	document cited by the applicant in the international application
"E"	earlier application or patent but published on or after the international filing date
"L"	document which may throw doubts on priority claim(s) or which is cited to establish the publication date of another citation or other special reason (as specified)
"O"	document referring to an oral disclosure, use, exhibition or other means
"P"	document published prior to the international filing date but later than the priority date claimed
"T"	later document published after the international filing date or priority date and not in conflict with the application but cited to understand the principle or theory underlying the invention
"X"	document of particular relevance; the claimed invention cannot be considered novel or cannot be considered to involve an inventive step when the document is taken alone
"Y"	document of particular relevance; the claimed invention cannot be considered to involve an inventive step when the document is combined with one or more other such documents, such combination being obvious to a person skilled in the art
"&"	document member of the same patent family

Date of the actual completion of the international search 15 April 2020 (15-04-2020)	Date of mailing of the international search report 21 May 2020 (21-05-2020)
Name and mailing address of the ISA/CA Canadian Intellectual Property Office Place du Portage I, C114 - 1st Floor, Box PCT 50 Victoria Street Gatineau, Quebec K1A 0C9 Facsimile No.: 819-953-2476	Authorized officer Goran Basic (819) 635-8017

INTERNATIONAL SEARCH REPORT
Information on patent family members

International application No.
PCT/CA2020/050214

Patent Document Cited in Search Report	Publication Date	Patent Family Member(s)	Publication Date
CN208512834U	19 February 2019 (19-02-2019)	None	
CN206199545U	31 May 2017 (31-05-2017)	None	
JP11270799 A	05 October 1999 (05-10-1999)	JP3620961 B2	26 November 2004 (26-11-2004)