Dec. 9, 1924. 1,518,942

H. A. SPEAR

FLUSHING VALVE

Filed June 21, 1923

FIG. 1.

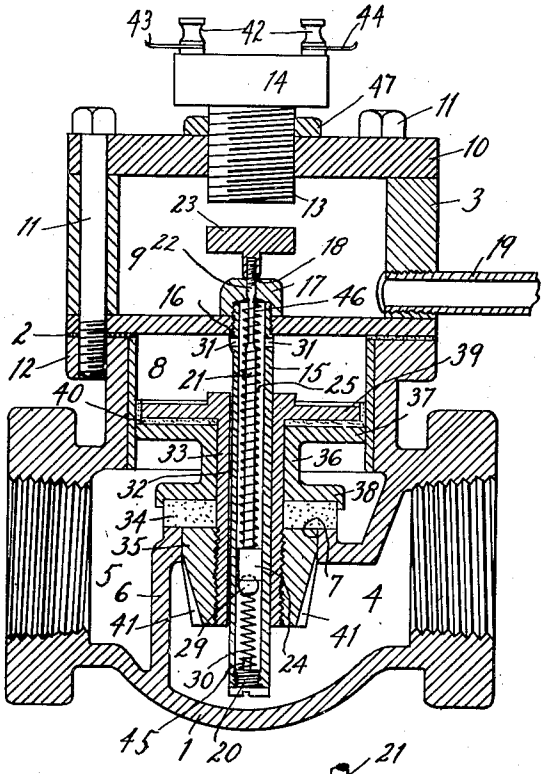

FIG. 2.

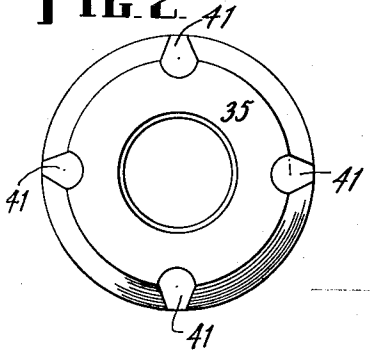

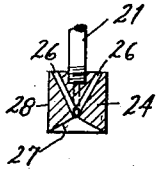

FIG. 3.

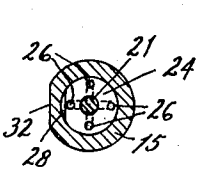

FIG. 4.

Howard A. Spear, INVENTOR.

BY

Frank A. Cutter, ATTORNEY.

Patented Dec. 9, 1924. 1,518,942

UNITED STATES PATENT OFFICE.

HOWARD A. SPEAR, OF SPRINGFIELD, MASSACHUSETTS, ASSIGNOR OF ONE-HALF TO JOHN W. STACY, OF SPRINGFIELD, MASSACHUSETTS.

FLUSHING VALVE.

Application filed June 21, 1923. Serial No. 646,793.

To all whom it may concern:

Be it known that I, HOWARD A. SPEAR, a citizen of the United States of America, and a resident of Springfield, in the county of Hampden and State of Massachusetts, have invented a new and useful Flushing Valve, of which the following is a specification.

My invention relates to improvements in flushing valves or flushometers, of the magnetic type, especially designed for use in lavatories, and consists broadly and generally of a body having therein inlet, outlet, pressure, and relief chambers, a main valve between said inlet and outlet chambers, movable compression means between said outlet and pressure chambers, the same being connected with said valve, a spring-pressed relief valve between said pressure and relief chambers, a tubular member extending downwardly from said relief chamber, through said pressure chamber and the parts and members below the same, into said inlet chamber, a stem extending downwardly from said relief valve and carrying at the lower end, in said tubular member, a perforated, retarding valve, a spring-pressed ball-valve for said retarding valve, and magnetic means for opening said relief valve, together with such other parts and members as may be necessary or desirable in order to render the flushing valve complete and serviceable in every respect, all as hereinafter set forth.

The primary object of my invention is to produce a flushing valve that can be operated at a distance by electro-magnetic energy, which valve is simple and comparatively inexpensive in construction, strong and durable, and positive in action, and wherewith are obtained a quick discharge, and a slow closing movement involving a predetermined time interval, the action of the valve being automatic throughout both the opening and closing operations, after the initial impetus is given by closing an electric circuit, through an electro-magnet, solenoid, or the like.

Another object is to provide a valve of this character with regulating means whereby the interval of time between opening and closing may be increased or decreased.

A further object is to produce a flushing valve which is non-leakable, practically noiseless, and withal highly practicable and efficient.

Other objects and advantages will appear in the course of the following description.

I attain the objects and secure the advantages of my invention by the means illustrated in the accompanying drawings, in which—

Figure 1 is a central, vertical section through a flushing valve which embodies a practical form of my invention, the movable parts being disposed in closed or otherwise normal or initial positions; Fig. 2, an enlarged, bottom plan of the main valve; Fig. 3, an enlarged, central, vertical section through the retarding valve, and, Fig. 4, a cross section through the central tubular member and valve-stem therein looking down onto said retarding valve.

Similar reference characters designate similar parts throughout the several views.

The lower part of the casing and the main-valve elements of this flushometer are similar in construction to what is commonly known as the Jenkins valve.

As illustrated in the drawings, the valve body comprises a casing 1, and a hollow head or dome 3 secured to said casing, with a packing-ring 2 between. The casing 1 is designed to be connected with the usual supply and discharge pipes of an ordinary water-supply system, and said casing has therein an inlet chamber 4 and an outlet chamber 5. The chambers 4 and 5 are separated by means of a partition 6 which is provided with a horizontal valve-seat 7. There is a brass-lined pressure chamber 8 in the casing 1 below the dome 3, and a relief chamber 9 in said dome. The top of the chamber 9 in the dome 3 consists of a plate or disc 10 of brass or other material which is a non-conductor of magnetism, and such disc or top is secured, with the cylinder that forms the sides of said chamber, to the casing 1 by means of a plurality of bolts 11. The bolts 11 pass downwardly through the top, sides, and bottom of the dome 3 and the packing-ring 2 into threaded engagement with a flange 12 at the top of the casing 1. There is an opening in the axial center of the top 10 in line with the axis of the valve-seat 7, and also in the same line is an opening through the bottom of said dome. A pole-piece 13, of an electro-magnet or solenoid 14, is tapped into the axial opening in the top 10, and may be adjusted therein so as to project a greater or

less distance into the chamber 9. A tube 15, which is flanged near the upper end at 16, has such end above the flange inserted in the axial opening in the bottom of the dome 3. The terminal of the tube 15 that passes through the aforesaid bottom opening is tapped to receive a nut 17. The nut 17 is above the bottom or floor of the dome 3, and, when tightened, draws the tube 15 upwardly into place with the flange or shoulder 16 tight against the underside of said floor. There is a valve-seat 18 in the axial center of the top of the nut 17, which valve-seat communicates below with the upper terminal of the tube 15 which is received in the nut 17 below said valve-seat. A horizontal waste pipe 19 is tapped into one side just above the bottom of the dome 3, and carries the water away from the chamber 9.

The tube 15 extends downwardly nearly to the bottom of the casing 1, and the lower end of said tube is closed by means of a screw-cap 20. Within the tube 15 is a valve-stem 21 which extends upwardly through the valve-seat 18 to form and serve as a relief valve 22 for said valve-seat, and to receive or carry an armature 23 above the nut 17. The lower terminal of the valve-stem 21 is tapped into a retarding piston 24, which latter is in the tube 15. A spiral spring 25 encircles the valve-stem 21 between the nut 17 and the piston 24, and normally causes said valve-stem to remain in its low position with the hub or nipple of the armature 23, into which the upper terminal of said valve-stem is tapped, bearing on top of said nut. There are four (more or less) oblique passages 26 in the piston 24, such passages opening through the top and into the apex of a conical recess 27 which is formed in the bottom of said piston. There is in one side of the piston 24 a vertical passage or flattened part 28, although the latter might be omitted in the event said piston have a fairly loose fit in the tube 15. The conical recess 27 forms a seat for a ball-valve 29. The ball-valve is normally held against the valve-seat thus formed by means of a spiral spring 30 the bottom terminal of which is supported on and centered by the screw-cap 20 and a post 45 that rises from the center thereof, said ball being supported at the upper terminal of said spring. The spring 30 is lighter or weaker than the spring 25. That portion of the valve-stem 21 that is below the valve 22 is cut away, as at 46, in order that there shall be an open passage through the valve-seat 18 when said valve is raised out of said seat.

The tube 15 has one or more openings 31 therein just below the flange 16, and communication between said tube and compression chamber 8 is thus established, and there is in one side of said tube a vertical passage or flattened part 32, which extends from the horizontal plane of the openings 31 downwardly to the bottom of said tube. Such passage or flattened part 32 might be omitted in the event the main-valve parts and members next to be described have a fairly loose fit on the tube 15.

Slidingly arranged on the tube 15 is a hollow member 33 which serves as a valve-stem for a valve 34 for the valve-seat 7. This is the main valve. The valve-stem 33 below the valve 34 is tapped into a valve member 35. A sleeve 36, having a top flange 37 and a bottom flange 38, is mounted on the valve-stem 33. The valve-stem 33 has a top flange 39 between which and the flange 37 is a leather washer or cup-packing 40 that tightly fits the walls of the chamber 8 in which latter these members move up and down. The flanges 37 and 39 and the cup-packing 40 form a piston-head. The valve 34 is clamped between the flange 38 and the valve member 35. The valve 34 when in closed position bears on the top of the valve-seat 7, while the upper portion of the valve member 35 at such time fills the opening through said seat. The lower portion of the valve member 35 is frusto-conical in shape, and there is a plurality of grooves 41 in and lengthwise of the periphery thereof, consequently, when the valve 34 and said member are elevated so that such frusto-conical, grooved part of said member is in the valve-seat 7, water is permitted to flow from the chamber 4, around the aforesaid member and through said grooves, through said seat into the chamber 5. The main-valve construction just described is of a nature which prevents water-hammer.

The water in the chamber 4 rises through the passage 32 into the pressure chamber 8, passes through the openings 31 into the tube 15 above the retarding piston 24, and through the passage 28 in said piston into said tube below said piston. Thus it is seen that the chamber 8 and the tube 15 are full of water, but that no water can enter the chamber 9 while the valve 22 is closed. The area of the piston-head being greater than that of the valve member 35, the pressure above said piston-head causes the valve 34 to be retained in closed position on the valve-seat 7, and without relieving such pressure said valve can not be opened.

The length of time which the relief valve 22 remains open, or the length of time which it takes to close the same, under the retarding effect of the piston 24, may be varied by screwing the solenoid pole-piece 13 farther in to the chamber 9 and thus nearer to the armature 23 when in low normal position, to decrease such time, and by screwing said pole-piece farther out of said chamber and thus increasing the distance between it

and said armature, to increase such time. That these conditions are obtained is due to the fact that, in the first instance, the slow closing movement permitted to the relief valve by the retarding piston is shortened, because the armature 23 elevates said relief valve a short distance only, and, in the second instance, said movement is lengthened, because said armature elevates said relief valve a greater distance.

At 42 two binding-posts are represented for wires 43 and 44 that form parts of the necessary electric circuit.

The operation of this flushing valve, assuming that the parts and members are disposed as in Fig. 1, is as follows:

The solenoid 14 is energized for an instant, when its pole-piece 13 attracts to itself the armature 23. The armature 23 in rising into contact with the pole-piece 13 carries with it, against the resiliency of the spring 25, the valve-stem 21, thus removing the relief valve 22 from the valve-seat 18, and opening a passage from the interior of the tube 15, through said seat, into the chamber 9. The valve-stem 21 carries upwardly with it the retarding piston 24. The piston 24 rises so quickly that it passes away from the ball-valve 29, the oblique passages 26 being of sufficient size to enable said piston to make the quick ascent through the water in the tube 15 and leave said ball-valve behind, in spite of the fact that the spring 30 is beneath the same. The spring 30 quickly, however, after the ascent of the piston 24, forces the ball-valve 29 against its seat 27 and thus closes the passages 26 at their lower ends. Now the piston 24 can descend, under the influence of the spring 25, only so fast as displacement of the water with which the tube 15 is always filled can be made through the narrow passage 28. The chamber 8 is full of water which has entered the same from the chamber 4 through the narrow passage 32, and the tube 15 is full of water, as previously stated, which water enters said tube through the openings 31 therein, and the water from said tube and said first-named chamber immediately passes through the valve-seat 18 into the chamber 9, from which latter the water escapes through the pipe 19 into the sewer. The water at this time passes from the chamber 8 through the openings 31 into the tube 15, and then upwardly through said tube and the valve-seat 18 into the chamber 9. As soon as the electric current is cut off from the solenoid 14, the pole-piece 13 becomes demagnetized and releases the armature 23 to the spring 25. The spring 25 forces the piston 24 downwardly, but only so fast as the water in the tube 15 can be displaced through the narrow passage 28, as previously observed, and said piston carries downwardly with it the valve-stem 21 and the valve 22, eventually causing said valve to close the valve-seat 18. The ball-valve 29 is moved downwardly with the retarding piston 24, against the resistance of the spring 30, so that the lower ends of the passages 26 are closed securely throughout the descent of said piston. Previous to the closing of the valve 22, and while the water is escaping from the chamber 8 into the chamber 9, the pressure of the water below the valve member 35 causes said member, the valve 34, and the valve-stem 33, with the other parts and members carried thereby, to be raised a sufficient distance to open the way through the valve-seat 7, and permit the water to pass from the chamber 4 through said valve-seat into the chamber 5. The flow of water from the inlet to the outlet chambers continues until the pressure of the water in the chamber 8 is sufficient to force downward the piston-head in said chamber 8 and cause the valve 34 to close the valve-seat 7, when the flow of water from said inlet chamber to said outlet chamber is cut off, and further flow ceases. The grooves 41 in the valve member 35 increase the area presented to the pressure of the water in the chamber 4, and facilitate both the opening and closing operations of the main valve, and also constitute a factor in preventing water-hammer. The water pressure begins to increase in the chamber 8, to bring about the closing of the valve 34, as soon as the valve 22 is closed, and continues to increase until the balance of pressure changes from the chamber 4 to the chamber 8. The way for water to pass from the chamber 4 to the chamber 8 is always open through the narrow passage 32.

Water enters the chamber 4 under pressure as usual, and the results described above are due to the fact that a certain amount of water entering said chamber rises through the passage 32 into the chamber 8 until the latter is filled and has a pressure therin equal to the pressure in the chamber 4, and to the further fact that the chamber 8 is much larger in diameter than the opening through the valve-seat 7, or the area of the piston-head in the chamber 8 is greater than that of said valve-seat, so that the valve 34 is seated with a force proportionate to the difference in area when the pressure in the chambers 4 and 8 is equal. It naturally follows that the opening of the relief valve 22 enables the pressure in the chamber 8 to be reduced, with the result that the greater pressure of the water in the chamber 4 causes the valve 34 to be opened. As soon as the relief valve is closed, however, the water pressure in the chamber 8 begins to increase, by reason of the entrance into said chamber of the water through the passage 32, and continues to increase until the force of the water above the piston-head

in said chamber is greater than that below the valve 34, when the latter is caused to descend onto its seat, as previously explained.

A lock-nut 47 may be provided for the solenoid pole-piece 13, said nut being above the top 10 of the dome 3.

More or less change in the shape, size, construction, and arrangement of some or all of the parts of this flushing valve may be made, without departing from the spirit of my invention or exceeding the scope of what is claimed.

What I claim as my invention, and desire to secure by Letters Patent, is—

1. In a flushing valve, a hollow body having therein communicating inlet and outlet chambers, and a pressure chamber, a fixed member, a main valve between said inlet and outlet chambers, a piston-head in said pressure chamber communicating with said inlet chamber, and a stem connecting said valve and piston-head and slidingly arranged on said fixed member, the area of said piston-head being greater than that of said valve, upwardly-opening means to relieve the pressure in said pressure chamber, such means consisting in part of an armature, and an adjustable solenoid in the top of said body above said armature, to operate said relief means, through the medium of said armature.

2. In a flushing valve, a hollow body having therein communicating inlet and outlet chambers, and a pressure chamber, a fixed member, a valve between said inlet and outlet chambers, a piston-head in said pressure chamber communicating with said inlet chamber, and a stem connecting said valve and piston-head and slidingly arranged on said fixed member, the area of said piston-head being greater than that of said valve, downwardly spring-pressed means adapted to be opened upwardly to relieve the pressure in said pressure chamber, and magnetic means to open said relief means against its spring.

3. In a flushing valve, a hollow body having therein communicating inlet and outlet chambers, and a pressure chamber, a fixed member, a valve between said inlet and outlet chambers, a piston-head in said pressure chamber communicating with said inlet chamber, and a stem connecting said valve and piston-head and slidingly arranged on said fixed member, the area of said piston-head being greater than that of said valve, downwardly spring-pressed means adapted to be opened upwardly to relieve the pressure in said pressure chamber, such means consisting in part of an armature, and an adjustable solenoid in the top of said body above said armature, to operate said relief means through the medium of said armature.

4. In a flushing valve, a hollow body having therein communicating inlet and outlet chambers, a pressure chamber in constant communication with said inlet chamber, and a relief chamber in communication with said pressure chamber, a main valve between said inlet and outlet chambers, a controlling piston-head in said chamber for said valve, an upwardly opening relief valve between said pressure and relief chambers, a stem for said relief valve provided with an armature, and an adjustable solenoid in the top of said body above said armature to open and control said relief valve through the medium of said armature.

5. In a flushing valve, a hollow body having therein communicating inlet and outlet chambers, a pressure chamber in constant communication with said inlet chamber, and a relief chamber in communication with said pressure chamber, a magnetic element set in the top of said relief chamber, a main valve between said inlet and outlet chambers, a controlling piston-head in said pressure chamber for said valve, and an upwardly opening relief valve between said pressure and relief chambers and with a part in the magnetic field below said magnetic element.

6. In a flushing valve, a hollow body having therein communicating inlet and outlet chambers, a pressure chamber in constant communication with said inlet chamber, and a relief chamber in communication with said pressure chamber, an adjustable magnetic element set in the top of said relief chamber, a main valve between said inlet and outlet chambers, a controlling piston-head in said pressure chamber for said valve, and an upwardly opening relief valve between said pressure and relief chambers and with a part in the magnetic field below said magnetic element.

7. In a flushing valve, a hollow body having therein communicating inlet and outlet chambers, a pressure chamber in constant communication with said inlet chamber, and a relief chamber in communication with said pressure chamber, a main valve between said inlet and outlet chambers, an upwardly opening relief valve between said pressure and relief chambers, and provided with an armature in said relief chamber, a piston-head in said pressure chamber, connections between said main valve and said piston-head, the latter being adapted normally to retain said main valve in closed position, and an element set in the top of said relief chamber, adapted to be magnetized and demagnetized, in operative position above said armature.

8. In a flushing valve, a hollow body having therein communicating inlet and outlet chambers, a pressure chamber in constant communication with said inlet chamber, and

a relief chamber in communication with said pressure chamber, a main valve between said inlet and outlet chambers, a relief valve between said pressure and relief chambers, and provided with an armature in said relief chamber, a piston-head in said pressure chamber, connections between said main valve and said piston-head, the latter being adapted normally to retain said main valve in closed position, and an adjustable element in said relief chamber, adapted to be magnetized and demagnetized, in operative position relative to said armature.

9. In a flushing valve, a hollow body having therein inlet, outlet, pressure, and relief chambers, a valve-seat between said inlet and outlet chambers, a valve for such seat, a piston-head in said pressure chamber, a valve-stem member connecting said valve and piston-head, a valve-seat between said pressure and relief chambers, a valve for said last-named valve-seat, a tube below said last-named valve-seat and extending through said piston-head, said tube opening into said pressure chamber, and there being an open passage between said inlet and pressure chambers, a stem extending from said second-named valve into said tube, a perforated piston carried by said stem in said tube, a spring arranged normally to force said stem and its valve and piston downwardly, means normally to close the perforations in said perforated piston, the construction providing for an open passage between both ends of said perforated piston, and means to open said second-named valve against the force of said spring.

10. In a flushing valve, a hollow body having therein inlet, outlet, pressure, and relief chambers, a valve-seat between said inlet and outlet chambers, a valve for such seat, a piston-head in said pressure chamber, a valve-stem member connecting said valve and piston-head, a valve-seat between said pressure and relief chambers, a valve for said last-named valve-seat, a tube below said last-named valve-seat and extending through said piston-head, said tube opening into said pressure chamber, and there being an open passage between said inlet and pressure chambers, a stem extending from said second-named valve into said tube, a perforated piston carried by said stem in said tube, a spring arranged normally to force said stem and its valve and piston downwardly, means normally to close the perforations in said perforated piston, the construction providing for an open passage between both ends of said perforated piston, and magnetic means to open said second-named valve against the force of said spring.

11. In a flushing valve, a hollow body having therein inlet, outlet, pressure, and relief chambers, a valve-seat between said inlet and outlet chambers, a valve for such seat, a piston-head in said pressure chamber, a valve-stem member connecting said valve and piston-head, a valve-seat between said pressure and relief chambers, a valve for said last-named valve-seat, a tube below said last-named valve-seat and extending through said piston-head, said tube opening into said pressure chamber, and there being an open passage between said inlet and pressure chambers, a stem extending from said second-named valve into said tube, a perforated piston carried by said stem in said tube, a spring arranged normally to force said stem and its valve and piston downwardly, means normally to close the perforations in said perforated piston, the construction providing for an open passage between both ends of said perforated piston, and adjustable magnetic means to open said second-named valve against the force of said spring.

12. In a flushing valve, a hollow body having therein inlet, outlet, pressure, and relief chambers, a valve-seat between said inlet and outlet chambers, a valve for such seat, a piston-head in said pressure chamber, a valve-stem member connecting said valve and piston-head, a valve-seat between said pressure and relief chambers, a valve for said last-named seat, a tube below said last-named seat and extending through said piston-head, said tube opening into said pressure chamber, and there being an open passage between said inlet and outlet chambers, a stem extending from said second-named valve into said tube, a perforated piston carried by said stem in said tube, a spring arranged normally to force said stem and its valve and piston downwardly, a spring-pressed ball-valve arranged normally to close the perforations in said perforated piston, the construction providing for an open passage between the ends of said perforated piston, and means to open said relief valve against the force of said spring.

13. In a flushing valve, a hollow body having therein inlet, outlet, pressure, and relief chambers, a valve-seat between said inlet and outlet chambers, a valve for such seat, a piston-head in said pressure chamber, a valve-stem member connecting said valve and piston-head, a valve-seat between said pressure and relief chambers, a valve for said last-named seat, a tube below said last-named seat and extending through said piston-head, said tube opening into said pressure chamber, and there being an open passage between said inlet and outlet chambers, a stem extending from said second-named valve into said tube, a perforated piston carried by said stem in said tube, a spring arranged normally to force said stem and its valve and piston downwardly, a spring-pressed ball-valve arranged nor-

mally to close the perforations in said perforated piston, the construction providing for an open passage between the ends of said perforated piston, and magnetic means to open said relief valve against the force of said spring.

14. In a flushing valve, a hollow body having therein inlet, outlet, pressure, and relief chambers, a valve-seat between said inlet and outlet chambers, a valve for such seat, a piston-head in said pressure chamber, a valve-stem member connecting said valve and piston-head, a valve-seat between said pressure and relief chambers, a valve for said last-named seat, a tube below said last-named seat and extending through said piston-head, said tube opening into said pressure chamber, and there being an open passage between said inlet and outlet chambers, a stem extending from said second-named valve into said tube, a perforated piston carried by said stem in said tube, a spring arranged normally to force said stem and its valve and piston downwardly, a spring-pressed ball-valve arranged normally to close the perforations in said perforated piston, the construction providing for an open passage between the ends of said perforated piston, and adjustable magnetic means to open said relief valve against the force of said spring.

HOWARD A. SPEAR.

Witnesses:
F. A. CUTTER,
C. C. WEST.