United States Patent [19]

Fletcher et al.

[11] **3,891,851**

[45] **June 24, 1975**

[54] **IMPACT POSITION DETECTOR FOR OUTER SPACE PARTICLES**

[76] Inventors: **James C. Fletcher,** Administrator of the National Aeronautics and Space Administration, with respect to an invention of **Siegfried O. Auer,** Lanham, Md.

[22] Filed: **Aug. 30, 1974**

[21] Appl. No.: **502,136**

[52] **U.S. Cl.** **250/385**

[51] **Int. Cl.** **G01t 1/00**

[58] **Field of Search** 250/385, 388, 389, 395

[56] **References Cited**

UNITED STATES PATENTS

3,626,189	12/1971	Berg	250/385
3,694,655	9/1972	Auer	250/389
3,715,590	2/1973	Auer	250/389

Primary Examiner—James W. Lawrence
Assistant Examiner—Davis L. Willis
Attorney, Agent, or Firm—Robert F. Kempf; Ronald F. Sandler; John R. Manning

[57] **ABSTRACT**

The impact position of cosmic dust, micrometeoroids and other similar outer space particles is detected with an array including a multiplicity of mutually insulated, metal electrode strips, a first group of which has parallel, longitudinal axes at right angles to a second group of the strips. There is provided a delay line having a multiplicity of taps, each of which is connected to one of the strips. The delay times between adjacent taps of the delay line are approximately the same. One end of the delay line is terminated with a resistor having a value substantially equal to the characteristic impedance of the delay line. The arrival time at a delay line output terminal of pulses induced in the delay line in response to particle impact is determined relative to the occurrence time of a further pulse derived in response to the impact. Circuitry is provided to separate pulses induced in the line from different strips, even though there are substantially simultaneous impacts on the different strips.

13 Claims, 20 Drawing Figures

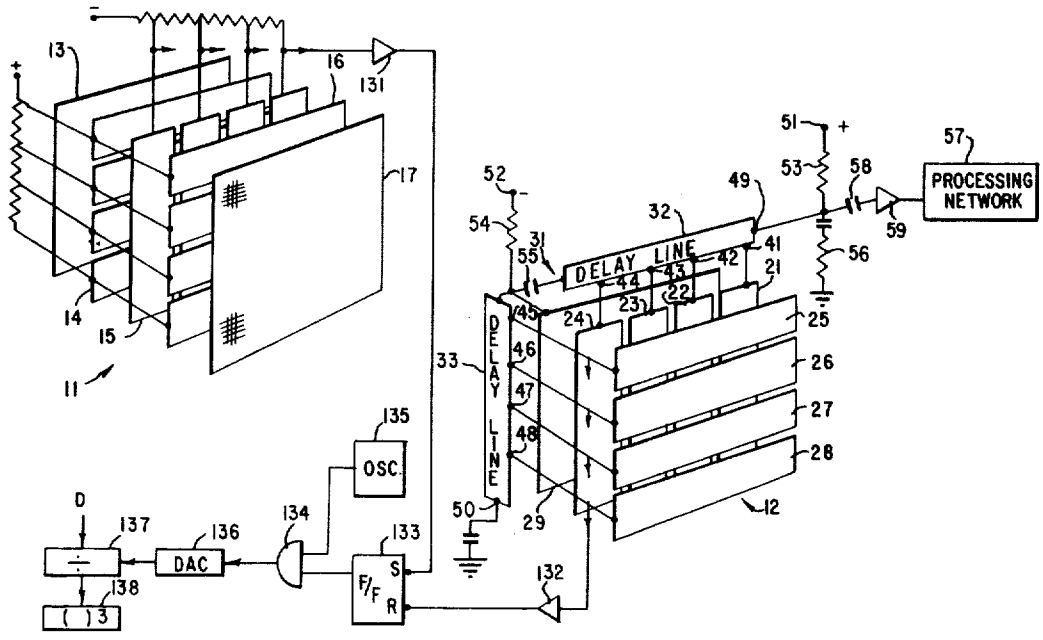

FIG. 1

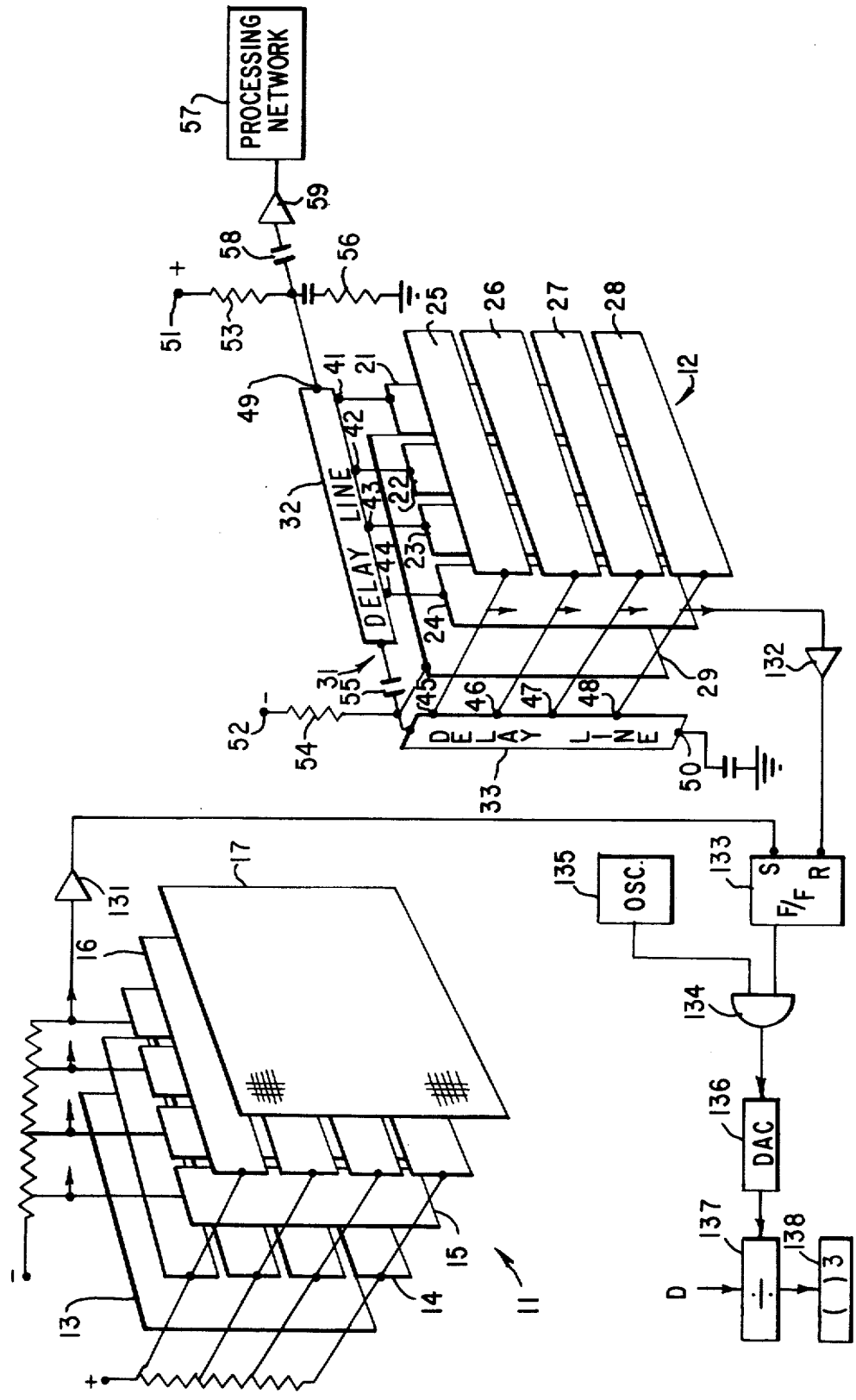
PROCESSING NETWORK
57
59
58
56
51
53
25
26
27
28
12
49
41
21
42
43
22
32
DELAY LINE
44
23
24
31
55
45
46
47
48
29
132
52
54
DELAY LINE
50
33
17
131
16
135
OSC.
133
S
F/F
R
134
136
DAC
137
138
D
÷
( )3
15
14
13
11

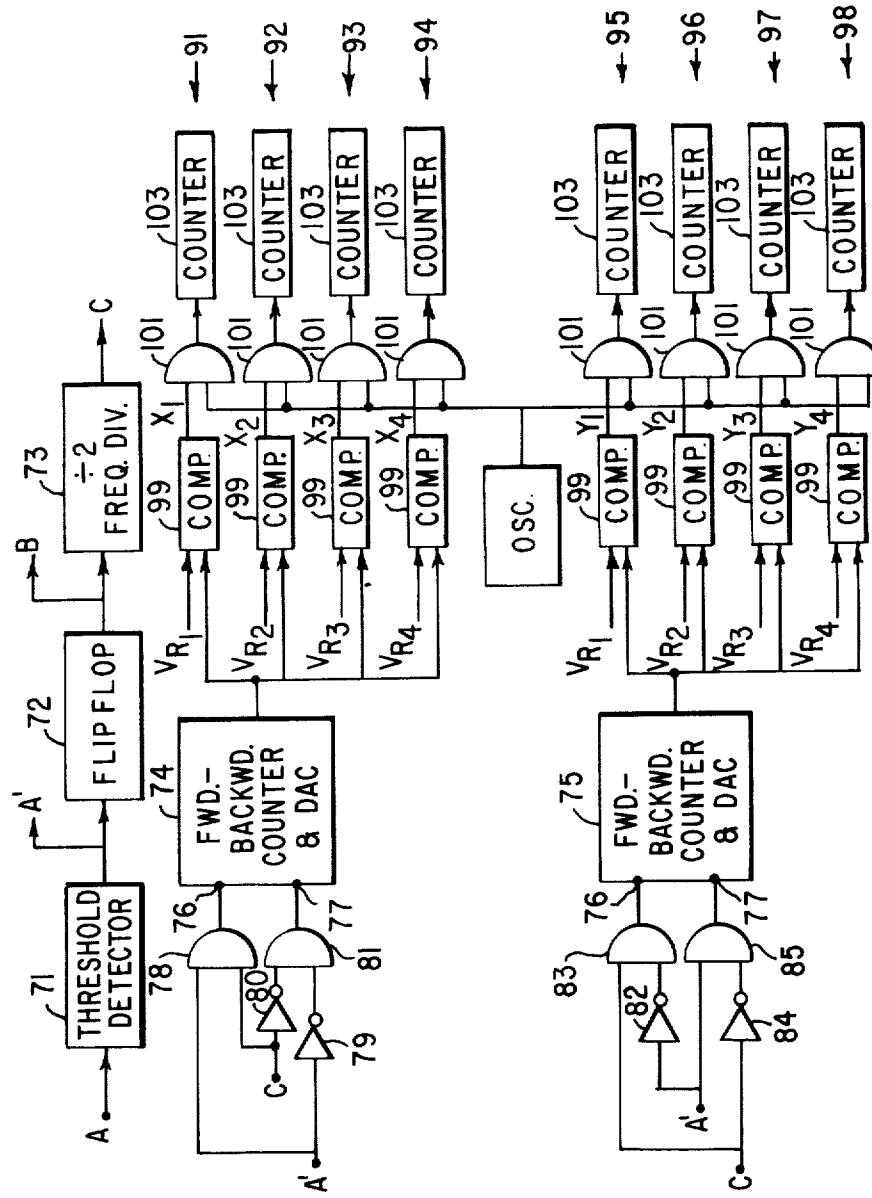
THRESHOLD DETECTOR
71
FLIP FLOP
72
÷2 FREQ. DIV.
73
FWD.-BACKWD. COUNTER & DAC
74
FWD.-BACKWD. COUNTER & DAC
75
OSC.
COMP.
99
COUNTER
103
91
92
93
94
95
96
97
98
A
A'
B
C
V_{R1}
V_{R2}
V_{R3}
V_{R4}
X_1
X_2
X_3
X_4
Y_1
Y_2
Y_3
Y_4

FIG. 2

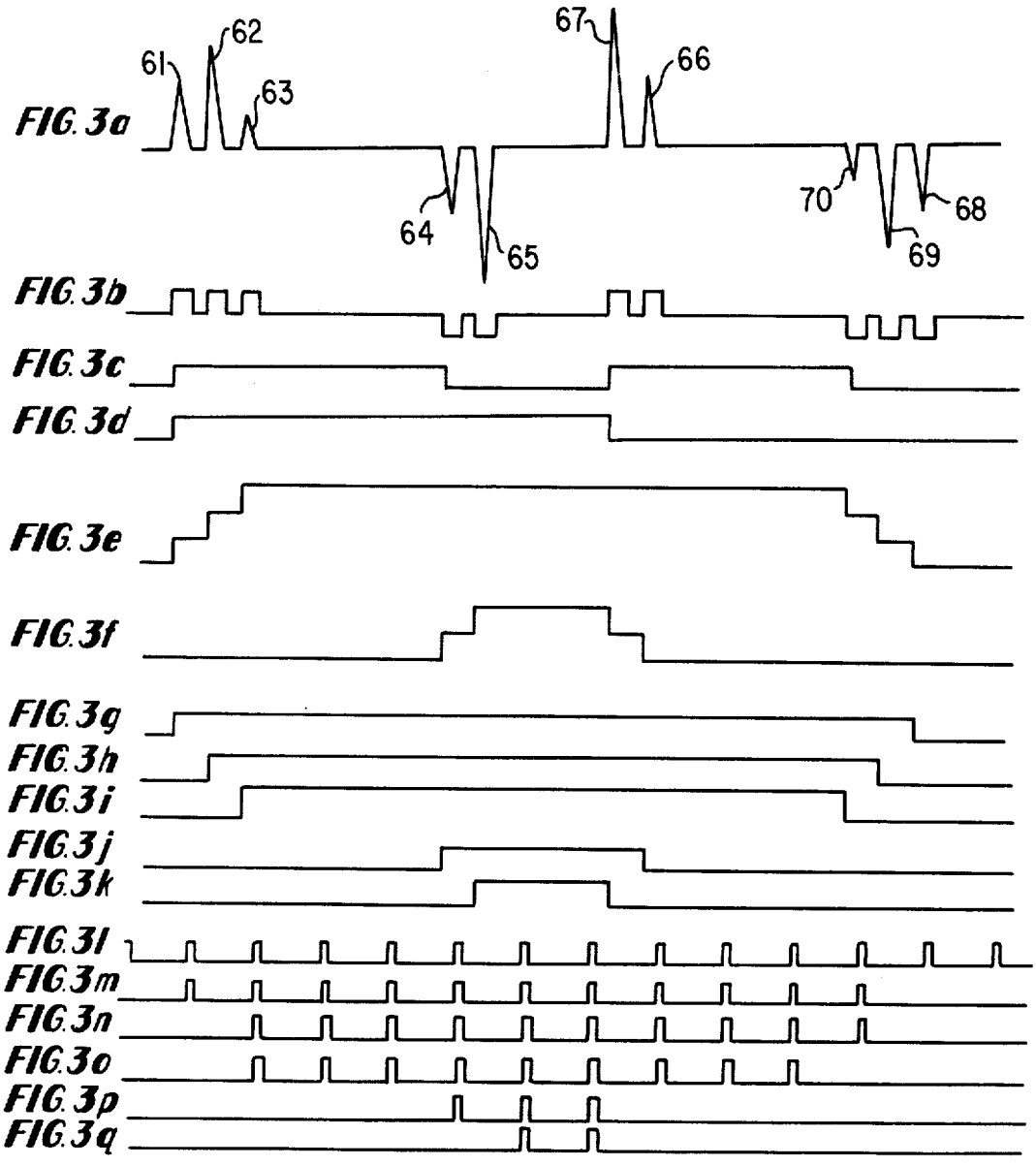
FIG. 3a
61
62
63
64
65
67
66
70
68
69
FIG. 3b
FIG. 3c
FIG. 3d
FIG. 3e
FIG. 3f
FIG. 3g
FIG. 3h
FIG. 3i
FIG. 3j
FIG. 3k
FIG. 3l
FIG. 3m
FIG. 3n
FIG. 3o
FIG. 3p
FIG. 3q

FIG. 4

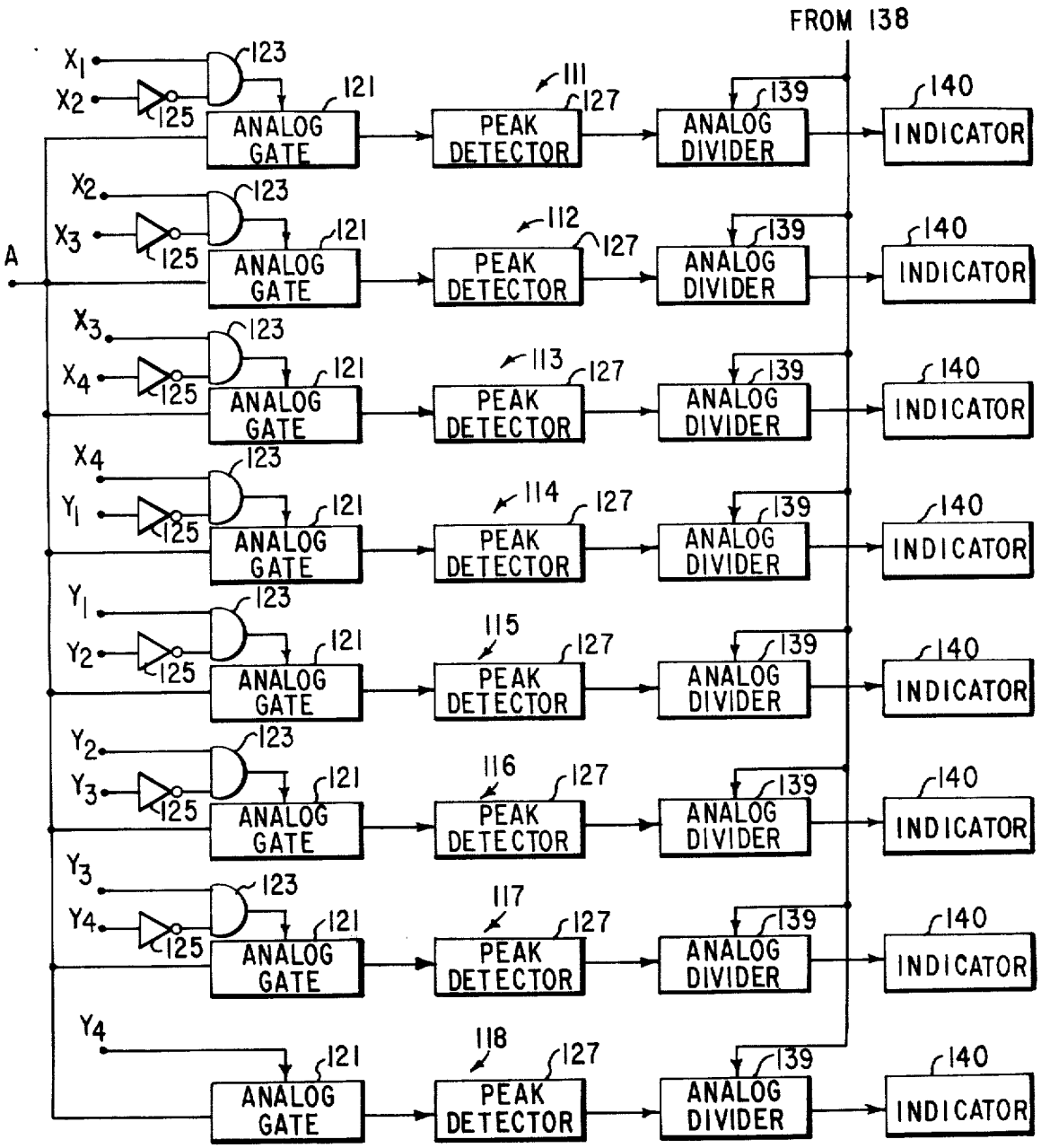
FROM 138
A
X1
X2
X3
X4
Y1
Y2
Y3
Y4
123
125
121
ANALOG GATE
111
112
113
114
115
116
117
118
PEAK DETECTOR
127
139
ANALOG DIVIDER
140
INDICATOR

IMPACT POSITION DETECTOR FOR OUTER SPACE PARTICLES

ORIGIN OF THE INVENTION

The invention described herein was made in the performance of work under a NASA contract and is subject to the provisions of Section 305 of the National Aeronautics and Space Act of 1958, Public Law 85-568 (72 STAT 435; 42 USC 2457).

FIELD OF THE INVENTION

The present invention relates generally to apparatus for detecting the impact location of cosmic dust, micrometeoroid and other similar outer space particles and more particularly to apparatus for detecting impact location on a detecting surface wherein the spatial position of the impinging particle is transferred into a time position.

BACKGROUND OF THE INVENTION

In Berg U.S. Pat. No. 3,626,189, as well as in my U.S. Pat. Nos. 3,694,655 and 3,715,590, there are disclosed devices for detecting the impact position of cosmic dust, micrometeroids and other similar outer space particles. These devices are characterized by forming a plasma stream in response to a particle impinging on a film having a bias voltage applied thereto. Electric charges in the plasma stream are either returned to the film or collected by a grid electrode arrangement in proximity to the film. The grid electrode arrangement is biased oppositely from the film so that charges of one polarity are collected by the film and charges of the other polarity are collected by the grid.

In the Berg device, the impact position of a particle on a detector array is determined by segmenting the grid and film into a multiplicity of strips, such that the film strips are orthogonal to the grid strips. An amplifier is responsive to a voltage change induced on each film or strip in response to the plasma stream being derived. To enable the number of amplifiers employed with the device disclosed by Berg to be reduced to a practical number, the systems disclosed in my two previously mentioned patents were developed.

It has been found that particles impinging on the film have a tendency to penetrate the film and emerge as ejecta in the form of a plurality of particles or as liquid droplets. There is interest in determining the flight paths and mass of the ejecta. To this end, there is provided a second array, downstream of a first array which is directly responsive to an initially impacting particle. The ejecta arrive substantially simultaneously at the second array.

In the devices disclosed in my prior art patents, simultaneous impacting of ejecta or other particles causes an erroneous indication of the impact position of the particles on the detector array. When several particles simultaneously impact, there is derived an output that is indicative of a single impact position. The indicated single impact position generally resembles the centroid of the different impact positions on the detector array. For example, if two particles impact substantially simultaneously at different locations on the array, the detector identifies a location on a straight line between the actual impact sites as the virtual location of impact, and there is no apparatus to determine that a double impact actually occurred. In response to three or more simultaneous particle impacts, the prior art device provides an indication of target location inside a triangle or multiangled polygon enclosed by straight lines between the actual impact sites.

BRIEF DESCRIPTION OF THE INVENTION

In accordance with a major aspect of the present invention, the problem of the prior art relating to the simultaneous impact is overcome by converting the spatial location of an impact site into a time position. The spatial to time position conversion is provided by connecting each of a plurality of mutually insulated equispaced particle detector strips to a different tap of a delay line. The delay line is arranged so that the delay times between adjacent taps are substantially the same, so that a unique time position to spatial relationship can be derived from a terminal at a first end of the delay line. To prevent reflections from the first end of the delay line, the first end of the delay line is terminated with a resistor having a value equal to the characteristic impedance of the delay line.

In accordance with one embodiment of the invention, the time position is determined by terminating the second end of the delay line with a short circuit, whereby pulses induced in the delay line in response to an impact are reversed in polarity at the second end of the delay line. Thereby, relatively simple apparatus can be provided at the first end of the delay line to distinquish between pulses which arrive at the first end directly and by reflection from the second end of the delay line.

The embodiment wherein the delay line is terminated at its second end with a short circuit has the added advantage of requiring only a single output amplifier. Since only a single delay line is required to derive impact location information in a pair of orthogonal directions there is at least a four-to-one reduction in the number of amplifiers required, compared to the devices disclosed in my prior art patents.

By comparing the time postions of the pulses arriving at the first end of the delay line, the spatial location of the impact on the array is determined. To enable detection of simultaneous impacts at different locations, circuitry is provided to be responsive to the pulse at the first output terminal of the delay line. The circuitry isolates the reflected and directly received pulses arriving at the first output terminal from the same strip into pairs. The pulse pairs are supplied to different channels, one for each strip to enable the spatial positions of the different simultaneous impacts to be ascertained.

In accordance with a further feature of the invention, the mass of each of the simultaneous impacts is separately detected in each of a plurality of channels. One channel is provided for each strip and is energized when a pulse for its corresponding strip is derived at the first delay line output terminal. Each mass indicating channel includes means for detecting the peak amplitude of each non-reflected pulse and for dividing the detected peak amplitude by a signal indicative of the velocity of the ejecta travelling between the two arrays.

It is, accordingly, an object of the present invention to provide new and improved apparatus for determining the impact position of cosmic dust, micrometeoroide and other particles on a detector array.

Another object of the invention is to provide a new and improved apparatus for detecting the impact locations of a plurality of simultaneously impacting outer space particles on a detector array.

Another object of the invention is to provide an apparatus for determining impact locations of a plurality of simultaneously impacting outer space particles on an array including a multiplicity of detector strips without requiring a separate driver amplifier for each of a multiplicity of strips.

An additional object of the invention is to provide a new and improved apparatus for studying break up of micrometeoroids, cosmic dust and other outer space particles after they penetrate a thin film.

A further object of the invention is to provide a new and improved apparatus for determining the trajectory of solid or liquid ejecta from an impact site of a micrometeoroid or other outer space particles on a detector array.

A still further object of the invention is to provide a new and improved apparatus for determining the masses of a plurality of simultaneously impacting outer space particles on the apparatus.

The above and still further objects, features and advantages of the present invention will become apparent upon consideration of the following detailed description of one specific embodiment thereof, especially when taken in conjunction with the accompanying drawing.

BRIEF DESCRIPTION OF THE DRAWING

FIG. 1 is a partially schematic and partially perspective view of one embodiment of the invention;

FIG. 2 is a block diagram of apparatus employed with the apparatus of FIG. 1, particularly enabling the detection of impact site location of simultaneously impacting outer space particles;

FIGS. 3A–3Q are illustrations of waveforms derived in the FIG. 2 system; and

FIG. 4 is a block diagram of apparatus utilized in conjunction with the apparatus of FIGS. 1 and 2 for enabling the mass of particles impacting on the FIG. 1 detector to be determined.

DETAILED DESCRIPTION OF THE DRAWING

Reference is now made to FIG. 1 of the drawing wherein there are illustrated two spaced arrays **11** and **12** having a common transverse axis. Array **11** is substantially the same as the five electrode configuration illustrated in U.S. Pat. No. 3,694,655 and includes five sets of electrodes **13–17** arranged in mutually parallel planes. Central electrode **15** includes a multiplicity of vertically extending, metal film strips which are connected to a positive D.C. bias voltage, whereby in response to a micrometeoroid, cosmic dust particle or other similar outer space particle impinging on the metal film, an anisotropic plasma stream is generated. The particle can also break up into several fragments which penetrate through film **15** and traverse the space between arrays **11** and **12.**

To enable the plasma stream derived from electrodes **15** to be captured by array **11,** without affecting the travel of particles impinging on the array **11** and enabling particles emerging from electrodes **15** to travel unimpeded to array **12,** electrode screens **13, 14, 16** and **17** are located on opposite sides of electrodes **15.** Electrodes **14** and **16** are formed as a multiplicity of horizontally extending screen strips, connected to a negative D.C. bias supply to collect positive ions in the plasma stream. Electrodes **13** and **17,** most remote from electrodes **15,** are formed as screens connected to a positive D.C. bias supply, thereby collecting electrons in the plasma stream.

Impact of a single particle on electrode **15** frequently results in the projection of solid or liquid ejecta from the impact site in the space between arrays **11** and **12.** It is a primary object of the invention to determine the impact sites of the ejecta on array **12,** even though the impacts occur substantially simultaneously on array **12.** To enable the impact sites to be determined, array **12** includes a multiplicity of vertically extending, mutually insulated, metal, coplanar strips **21–24,** having parallel longitudinal axes, approximately the same breadth and approximately equal spacing between adjacent edges of the different strips. Positioned downstream of grid electrodes **21–24** is a plurality of horizontally extending, mutually insulated coplanar, metal film electrodes **25–28,** also having parallel longitudinal axes, approximately the same breadth and approximately equal spacing between adjacent edges of the different strips. Positioned upstream of grid electrodes **21–24** is a further grid electrode **29.**

Electrodes **21–24** are connected to a positive D.C. bias voltage, while electrodes **25–29** are connected to a negative D.C. bias voltage. Thereby, in response to ejecta from array **11** impinging on one of electrodes **25–28,** an anisotropic plasma stream or spray having positive ions and electrons therein is generated. Positively charged ions in the plasma stream derived from any of electrodes **25–28** return to the electrode from which the spray was initiated and which corresponds with line of flight of the ejecta from array **11** to electrodes **25–28** because of the attractive force between the positively charged ions and the negative D.C. voltage applied to the electrode. Because of the positive bias applied to grids **21–24,** electrons in the plasma spray are collected by electrodes **21–24** in closest proximity to the impact site of the particle on electrodes **25–28** which corresponds with the line of flight of the ejecta through grid electrodes **21–24.** Any electrons in the plasma spray having sufficient energy to pass through mesh electrodes **21–24** are repelled by the negative D.C. field applied to mesh electrode **29** and are returned to and/or captured by positively biased mesh electrodes **21–24.**

While only four strips are illustrated as being included in the plane occupied by electrodes **21–24** and four strips are illustrated in the plane occupied by electrodes **25–28,** it is to be understood that in an actual embodiment having high resolution, the number of strips in each plane is considerably in excess of four, typically being on the order of **100.** The detailed description of FIG. 1 to this point is considered to be in the prior art, as disclosed in my U.S. Pat. No. 3,694,655.

To enable detection of the simultaneous impact sites of ejecta on strips **21–24** and **25–28,** the spatial impact position is translated into a time position in accordance with the present invention. To this end, a delay line **31** having two series connected segments **32** and **33** is provided. Delay line segments **32** and **33** respectively include a multiplicity of taps **41–44** and **45–48** which are connected in D.C. circuit with electrode strips **21–24** and **25–28.** Positive and negative D.C. bias supply voltages are respectively connected to electrodes **21–24** and electrodes **25–28** through delay line segments **32** and **33** by D.C. sources at terminals **51** and **52** through relatively large isolation resistors **53** and **54.** The posi-

tive D.C. voltage in delay line segment **32** is decoupled from the negative D.C. voltage in delay line segment **33** by blocking capacitor **55**, connected in series between segments **32** and **33** and having a sufficiently large value to enable pulses induced in segments **32** and **33** to propagate easily between the two segments without substantial attenuation or delay compared to one section of the delay line between adajacent taps (e.g., between taps **41** and **42** or between taps **41** and **45**).

Delay line **31** is arranged so that the delay time between adjacent taps is substantially the same for pulses coupled to the delay line from electrodes **21–28** so that a unique time position of pulses arriving at one end of the delay line exists for each pulse induced in the delay time from each electrode. The same result can be attained by providing unequal spacing between the electrodes **21–24** and **25–28** and a commensurate proportional delay time displacement between adjacent taps of line **31**. Positive pulses are coupled to taps **41–44** in response to electrons in the plasma stream impinging on electrodes **21–24**. In contrast, negative pulses are supplied by electrodes **25–28** to taps **45–48** in response to positive ions in the plasma stream returning to electrodes **25–28**.

Pulses coupled to delay line **31** from taps **41–48** travel in both directions in the delay line. At a first end terminal **49** of delay line **31**, where tap **41** is located, the pulses are not reflected, a result achieved by connecting resistor **56**, having a value equal to the characteristic impedance of the delay line, between terminal **49** and a ground terminal. At the other, second end terminal **50** of the delay line, adjacent tap **48**, the pulses are reversed in polarity and propagate to end terminal **49**, a result achieved by short-circuiting end terminal **50** to ground. Delay line **31** is approximately lossless, so the amplitude of pulses coupled to terminal **49** is substantially the same as the amplitude of the pulses initially induced in the delay line by the voltages derived from electrodes **21–28**.

The pulses generated across terminating resistor **56** are coupled to a processing electronics network **57** via coupling capacitor **58** and operational amplifier **59**. Operational amplifier **59** has a relatively high input impedance, such as provided between the gate and source electrodes of a metal oxide semiconductor field effect transistor.

In response to a pulse being generated in one of electrodes **21–24** or **25–28**, a positive or negative pulse is coupled to delay line segment **32** via one of taps **41–48**. The pulse propagates directly to delay line terminal **49**, arriving at terminal **49** displaced in time from its initial inducement in the delay line by an interval equal to:

$$T_1 = (n-1)t_0 \tag{1}$$

where:

T_1 = the delay time in propagating from one of taps **41–48** to terminal **49**;

n = the units digit of the number of the tap;

t_0 = the time for the pulse to travel between adjacent taps of delay line **31**.

A pulse induced in delay line **31** from one of taps **41–48** also travels to end terminal **50**, where it is reversed in polarity and arrives at terminal **49** at a time indicated by:

$$T_2 = [2N-(n-1)]t_0 \tag{2}$$

where:

N = the number of tops of line **31**.

The time displacement between the positive and negative voltages at terminal **49** is given by:

$$T_2 - T_1 = 2[N-(n-1)]t_0 \tag{3}$$

Thereby, by measuring the time displacement between a pair of opposite polarity pulses as supplied to the input of processing electronic network **57**, it is possible to convert the spatial impact position on one of electrodes **21–28** into a time position.

The impact time on electrodes **21–28** can be ascertained by determining the instant of time midway between the two opposite polarity pulses derived at terminal **49** from one of the electrodes and subtracting the median instant of time from the total delay time (Nt_0) of line **31**.

To enable unique detection of the spatial position of pulses simultaneously derived from different ones of electrodes **21–28**, processing network **57** includes circuitry for separating the pulses derived at terminal **49** at different times into different channels, one of which is provided for each of the electrode strips **21–28**. The details of the circuitry included in processing electronic network **57** are illustrated in the block diagram of FIG. **2**. The circuitry included in FIG. **2** may in many instances be located at a ground station remote from a spacecraft carrying the detector of the present invention, with communication between the detector and ground station being via a suitable R.F. link.

The circuitry included in processing network **57** is described in connection with an exemplary situation, as illustrated in FIG. **3**. In FIG. **3**, it is assumed that a particle impacting on array **11** causes three particles to impact substantially simultaneously on array **12**. The impact site of one of the particles results in positive and negative pulses being respectively derived from electrodes **22** and **26**; the second particle results in positive and negative pulses being respectively derived from electrodes **23** and **27**; and the third particle results in positive and negative pulses being respectively derived from electrodes **24** and **27**. The pulses from electrodes **22, 23, 24, 26** and **27** are simultaneously derived and result in the simultaneous derivation of voltage pulses at taps **42, 43, 44, 46** and **47**. The pulses at taps **42–44, 46** and **47** cause pulses to be induced in line **31**, resulting in direct and reflected opposite polarity time displaced pulses to be derived at output terminal **49** of delay line **31**, as indicated by the waveform of FIG. **3A**. In FIG. **3A**, pulses **61, 62** and **63** are derived in response to pulses derived from strips **22, 23** and **24** and coupled directly to delay line output terminal **49**. The pulses at electrodes **26** and **27** are coupled directly to delay line output terminal **49** as pulses **64** and **65**, and the reflected replicas of pulses **64** and **65** are respectively derived at output terminal **49** as pulses **66** and **67**. The reflected replicas of pulses **61–63** are derived at output terminal **49** as pulses **68, 69** and **70**, respectively.

The pulses at delay line end terminal **49** are coupled via amplifier **59** to an input of threshold detector **71**

which functions as a pulse shaper to eliminate noise and derive relatively short, constant duration and constant amplitude pulses, as illustrated in FIG. 3B. Detector 71 is responsive to pulses of both polarities and derives an output pulse having the same polarity as input pulses to the detector.

The output signal of threshold detector 71 is D.C. coupled to a trigger input of flip-flop 72. Flip-flop 72 is of the type which remains in a particular state until the D.C. level applied to its trigger input is of an opposite polarity relative to the polarity of its previous input pulse. Flip-flop 72 is respectively triggered to binary one and zero states in response to positive and negative pulses being derived from the output of detector 71. As illustrated in FIG. 3C, flip-flop 72 derives a rectangular wave output, having leading edge transitions occurring simultaneously with the leading edge of a first positive output pulse of detector 71 and a trailing edge occurring simultaneously with the leading edge of a first negative pulse derived from detector 71. The output signal of flip-flop 72 is applied to divide-by-two frequency divider 73 which derives a rectangular wave output as illustrated by the waveform of FIG. 3D.

The output signals of threshold detector 71 and frequency divider 73 are combined in logic, counting and comparator circuitry to enable the pulses which are derived from the same electrodes of array 12 to be separated into mutually exclusive pairs; the logic, counting and comparator circuitry for deriving signals indicative of the impact location of vertically extending strips 21–24 is separate from the circuitry employed for determining the spatial location of the horizontally extending strips 25–28. To these ends, a pair of forward-backward counters 74 and 75 is provided. Each of counters 74 and 75 includes a count forward input terminal 76 and a count backward input terminal 77, as well as an internal digital-to-analog converter for converting a count signal stored therein into a D.C. analog voltage that is directly proportional to the count stored therein. In response to each pulse supplied to the forward and backward input terminals 76 and 77 of counters 74 and 75 the counts of the counters are respectively incremented and decremented by a count of one.

Counter 74 is advanced by a count of one in response to each positive output pulse of detector 71 while a binary one level is being derived from divider 73. To this end, the output signals of detector 71 and divider 73 are applied to input terminals of AND gate 78, having an output which is coupled to count forward input terminal 76 of counter 74. Counter 74 is decremented by a count of one in response to each negative pulse derived from threshold detector 71 while divider 73 is in a binary zero state. To this end, the output signals of threshold detector 71 and divider 73 are respectively applied to inverting gates 79 and 80, having outputs which are coupled to the input terminals of AND gate 81, which derives an output signal which is coupled to count backward input terminal 77 of counter 74. Thereby, at any instant of time, the count stored in counter 74 and the level of the analog signal derived from the output of the counter are, in the interval between pulses 61 and 68, indicative of the number of pulses that have been or remain to be processed from vertically extending electrodes 21–24, as represented by the staircase waveform illustrated in FIG. 3E.

Counter 75 is incremented by a count of one in response to each negative output pulse of threshold detector 71 while the output of divider 73 is in a binary one state. To this end, the output signal of detector 71 is coupled to inverter gate 82 which supplies one input of AND gate 83, having a second input directly responsive to the output of divider 73. The output of AND gate 83 is supplied to the forward input terminal 76 of counter 75. The count of counter 75 is decremented by a count of one in response to each positive output pulse of threshold detector 71 while divider 73 is in a binary zero state, a result achieved by supplying the output of divider 73 through inverter 84 to one input of AND gate 85, having a second input responsive to the output signal of threshold detector 71. AND gate 85 derives binary one pulses that are supplied to backward input terminal 77 of counter 75. Counter 75 thereby stores a count and derives an analog output voltage having a value equal to the number of pulses derived from horizontally extending strips 25–28 that have been or remain to be processed, as illustrated by the step waveform of FIG. 3F.

As illustrated in FIGS. 3E and 3F, the outputs of counters 74 and 75 are staircase waveforms, with the amplitude of each step being the same, but the length of the several steps differing from each other. The leading edge of each ascending step of waveform FIG. 3E is in time coincidence with a leading edge of a corresponding positive going pulse in the waveform of FIG. 3B, as derived from detector 71. The leading edge of each descending step in FIG. 3E is in time coincidence with the leading edge of each negative going pulse in the waveform of FIG. 3B. The time separation between each ascending and descending step of FIG. 3E indicates the spatial separation between adjacent electrodes 21–24 from which pulses are derived.

The total separation between corresponding ascending and descending steps in the waveform of FIG. 3E provides an indication of the spatial location of each one of strips 21–24 from which a pulse is derived. For example, the time separation between the ascending step on the extreme left side of the waveform of FIG. 3E and the descending step on the extreme right side of FIG. 3E provides an indication that a pulse was derived from electrode 22. In this connection, it is to be noted that pulses 61 and 68 are both derived from strip 22 in the exemplary situation. Similarly, the ascending steps in the waveform of FIG. 3F are in time coincidence with the leading edges of the negative going pulses derived from detector 71 in response to pulses 64 and 65, while the descending steps of FIG. 3F are in time coincidence with the leading edges of the positive going pulses derived from detector 71.

To process the step waveform outputs of counters 74 and 75 into separate signals for each of the electrodes 21–28, and to enable an indication of the electrodes which derive pulses to be obtained, the output signal of counter 74 is applied to a plurality of parallel channels 91–94, one of which is provided for each of electrodes 21–24, while the output of counter 75 is applied to parallel channels 95–98, which are respectively provided for electrodes 25–28. In each of channels 91–98, there is provided a comparator 99 which is responsive to the output signal of one of counters 74 or 75. Comparators 99 are designed so that a binary one level is derived thereby in response to the input voltage thereof from counters 74 and 75 being equal to or greater than a reference input voltage. Each of comparators 99 in channels 91–94 is responsive to a different reference input

voltage, having a magnitude corresponding with the output level of the different steps of the stairwave voltage derived from counter **74.** Similarly, comparators **99** of channels **95–98** are supplied with different reference input voltages having levels corresponding with the steps derived from the output of counter **75.** The output of comparator k_1 of channels **91–94** can be represented as X_{k_1}, where $k_1 = 1, 2, 3, 4$ for channels **91, 92,** 93 and **94,** while the output of comparator k_2 of channels **95–98** can be represented as Y_{k_2}, where $k_2 = 1, 2,$ **3, 4 for channels** 95, 96, 97 **and** 98.

In the exemplary situation described in connection with the waveforms of FIG. **3,** the output signals of the comparators of channels **93, 94** and **95** are respectively represented by the waveforms of FIGS. **3G, 3H** and **3I,** respectively having leading and trailing edges in time coincidence with the leading edges of the first, second and third ascending and descending steps of the waveform of FIG. 3E. Similarly, the comparators of channels **97** and **98** respectively derive the rectangular waveforms illustrated in FIGS. **3J** and **3K,** which respectively have leading and trailing edges in time coincidence with the ascending and descending first and second steps of the waveform of FIG. **3F.**

The length of each of the rectangular waveforms derived from comparators **99** of FIGS. **3G–3K** is indicative of the time separation between the unreflected and reflected pulses arriving at terminal **49,** as indicated by Equation (3). The time interval of each of the rectangular waveforms derived from comparators **99** is measured by including in each of channels **91–98** an AND gate **101** that is responsive to the comparator of the channel. Each of AND gates **101** is also responsive to an output signal derived from clock pulse source **103,** having a period between adjacent pulses of $2T_0$ seconds, as illustrated by the waveform of FIG. **3L.** For the exemplary situation, the output signals of the AND gates **101** of channels **93, 94, 95, 96** and **97** are respectively illustrated by the waveforms of FIGS. **3M–3Q.** The number of clock pulses in each of the waveforms of FIGS. **3L–3K** is equal to the N's complement of the number of taps in delay line **31** minus the number of the tap in which the pulse was induced plus one, i.e., the number of counts equals $(N-n+1)$. Each of channels **91–98** includes a separate counter **103** having a count input responsive to the AND gate **101** included in the respective channel. Counters **103** thereby indicate the location, in Cartesian coordinates of each horizontal and vertical strip in array **12** on which ejecta substantially simultaneously impact.

To determine the mass of the ejecta impinging on each of the strips in array **12,** the mass on each of the electrodes **21–28** is determined by gating the signal derived from amplifier **59** into a plurality of parallel channels **111–118** (FIG. **4**), one of which is provided for each of the electrodes **21–28.** In each channel, the peak amplitude of the pulse derived from amplifier **59** is determined and combined with a signal indicative of the velocity of the impacting ejecta between arrays **11** and **12,** as indicated by the travel time between the two arrays.

To these ends, each of channels **111–118** includes an analog gate **121** that is open only in the interval when a direct, unreflected pulse from a particular electrode can be derived from output terminal **49** of delay line **31.** For each of the vertically extending electrode strips, except for the last strip, (i.e., for strips **21–23**), this result is achieved by providing in channels **111–113** an analog gate **121** that is opened to pass signals during the interval when the binary outputs of comparators **99** of channels **91–93** are represented by $X_{k_1} \cdot \overline{X_{k_1+1}}$. Similarly, in each of the channels **115–117,** i.e., the channels for the horizontally extending strips, except for the last strip, (i.e., for strips **25–27**), an analog gate **121** is opened during the interval while the outputs of the comparator of channels **95–97** are represented by $Y_{k_2} \cdot \overline{Y_{k_2+1}}$. Channels **114** and **118,** which process the signals derived from the last vertically and horizontally extending strips **24** and **28,** as derived from amplifier **59,** include analog gates **121** that are respectively opened in the interval when unreflected pulses from the last vertically extending strip **24** and from the last horizontally extending strip **28** arrive at terminal **49.**

To these ends, each of channels **111–117** includes an AND gate **123** which drives the analog gage **121** of its respective channel with a binary one signal that opens the analog gate so it can pass its input signal to its output terminal. One input of AND gates **123** of channels **111–117** is responsive to the binary signal respectively derived at the outputs of the comparators of channels **91–97.** The other input of each of AND gates **123** of channels **111–117** is respectively responsive to the complement of the signals derived from the comparators of channels **92–98,** as coupled through inverter gates **125,** one of which is included in each of channels **111–117.** Analog gate **121** of channel **118** is directly responsive to the output signal of comparator **99.**

The variable amplitude pulses selectively coupled through analog gates **121** of channels **111–118** are applied to a different peak detector **127** included in each of the channels. Each of peak detectors **127** derives a steady output signal in response to the direct, nonreflected pulse derived from the output of amplifier **59.** The magnitude of the output voltage of each of peak detectors **127** is directly proportional to the energy of the line of flight of ejecta impinging on the portion of array **12** aligned with each of strips **21–28.**

To determine the mass of each of the solid particle or liquid droplets in the ejecta, the output signal of each of peak detectors **127** is divided by a signal indicative of the propagation velocity between arrays **11** and **12.** The propagation velocity is determined by measuring the time interval between impingement of a particle on any of film **15** of array **11** and the impact time of the resulting ejecta on any of films **25–28** of array **12.** Since the spacing between films **15** and **25–28** is a constant, predetermined quantity, the velocity can be determined from the travel time between the films.

To these ends, signals derived from each of films **15** are coupled to separate inputs of a single, high input impedance amplifier **131** (FIG. **1**). Similarly, the signals derived from films **25–28** are coupled as inputs to a single, high input impedance amplifier **132.** The several signals from films **25–28** are coupled to a single amplifier **132** because it can usually be validly assumed that all of the ejecta from array **11** impinges substantially simultaneously on films **25–28** of array **12.** The output signal of amplifier **131** is applied to a set input terminal of flip-flop **133,** having a reset input terminal responsive to the output of amplifier **132.** Flip-flop **133** is thereby in a binary one state during the interval while ejecta is propagating between arrays **11** and **12.** A resulting binary one output of flip-flop **133** is coupled to

one input of AND gate **134**, having a second input responsive to clock pulses from oscillator **135**, having a frequency such that a relatively large number of pulses is derived from the oscillator in the interval while ejecta propagate between arrays **11** and **12**. Pulses derived from AND gate **134** are coupled to digital-to-analog converter **136**, the output of which is a D.C. analog signal having a magnitude directly proportional to the travel time of ejecta between arrays **11** and **12**.

The output signal of converter **136** is supplied as a divisor input to analog divider **137**, having a dividend input equal to the separation between the film electrodes of arrays **11** and **12**. The output of divisor **137** is an analog D.C. signal directly proportional to the velocity of propagation of ejecta between arrays **11** and **12**. The output of divider network **137** is applied to a cubing network **138**, which derives an output signal proportional to SV^3, where S is a predetermined constant and V is the propagation velocity. The output signal of divider **138** is applied as a divisor input to an analog divider **139** included in each of channels **111–118**. Each of analog dividers **139** has a divider input terminal responsive to the output of the peak detector **127** for the particular channel, whereby each of the analog dividers derives an output signal having a magnitude directly proportional to the mass of the material impinging on an area of array **11** commensurate with the area of the strip for which the channel is associated.

The output signal of each of dividers **139** is applied to a separate indicator **140**, such as a voltmeter or analog to digital converter to digital display combination. The output signal of indicator **140**, together with the strip indicating signal derived from each of counters **103**, enables the impact location of ejecta on array **12** to be determined in each area of array **12** defined by a square that is coincident with overlapping areas of strips **21–28**. A correlation between ejecta impact position and mass can be performed manually, or by automatic recording apparatus including vertically and horizontally extending strips that are energized in pairs in response to the output signals of counter **103** and the signals derived from each of channels **111–118**. In the alternative, in systems where resolution in two orthogonal directions is not required, information in a single direction can be derived by including only vertically or horizontally extending strips in array **12**.

While there has been described and illustrated one specific embodiment of the invention, it will be clear that variations in the details of the embodiment specifically illustrated and described may be made without departing from the true spirit and scope of the invention as defined in the appended claims. For example, delay line **31** can be terminated with an open circuit, rather than a short circuit, at terminal **50**, in which case the reflected pulses at the delay line output terminal **49** have the same polarity as the directly received, unreflected pulses. In response to the like polarity direct and reflected pulses arriving at terminal **49**, logic circuitry must be included to identify the direct and reflected pulses by a reasonable time sequence thereof. Once the direct and reflected pulses have been identified, they can be supplied to the same processing network as is employed with the system described in connection with FIGS. **1–4**. A further modification involves connecting a resistor having a value equal to the characteristic impedance of delay line **31** between terminal **50** and ground, rather than short-circuiting terminal **50** to ground. If both ends of delay line **31** are connected to resistors having a value equal to the delay line characteristic impedance, there are no reflected pulses and additional signal processing circuitry must be connected to terminal **50**. The additional processing circuitry must also be responsive to a signal indicative of the impact time of ejecta on array **12**, a result which can be achieved by supplying the output signal of amplifier **132** to the additional circuitry.

The invention is also applicable to other outer space particle detectors, such as those including a thin film covered with thin conductive layers on both sides wherein pulses are derived in response to penetrating meteoroids or the like. Such detectors have been utilized in spacecraft in the past, for example, in the Pegasus Project and on the Mariner IV spacecraft.

What is claimed is:

1. In an apparatus for determining the impact position of cosmic dust or other similar outer space particles on a detector, an array of electrically conducting, mutually insulated metal strips each having a different impact area for the particles, each of said strips including means for generating a different electric pulse in response to a particle having a line of flight in the impact area thereof, the strips of said array being arranged so that each strip uniquely indicates the spatial location of an impact, at least some of said strips having parallel longitudinal axes and defining an impact area having the same length in a direction at right angles to the longitudinal axes, a delay line having a multiplicity of taps, each of which is connected to one of said strips, the delay time of the delay line between adjacent taps being proportional to the spatial separation between adjacent electrodes, whereby a first pulse is induced in the delay line at the tap connected to the strip in which a line of flight exists and propagates down the delay line to a first end thereof, means for substantially preventing reflection of pulses from the first end of the line, and an amplifier having an input terminal connected to be responsive to pulses arriving at the first end of the line.

2. The apparatus of claim **1** further including means responsive to an output of the amplifier for detecting the first pulse arrival time at the first end relative to the occurrence time of a further pulse derived in response to a line of flight existing in the strip.

3. The apparatus of claim **2** wherein said delay line is terminated at a second end so as to cause the induced pulse to be reflected from the second end, the reflected pulse being coupled to the first end, said means for detecting including means for detecting the relative arrival time at the first end of the first and reflected pulses.

4. The apparatus of claim **3** wherein said delay line is terminated at the second end so as to cause the reflected pulse to have a polarity opposite from the first pulse.

5. The apparatus of claim **4** wherein a short circuit terminates said delay line.

6. The apparatus of claim **1** wherein multiple impacts are susceptible to substantially simultaneous occurrence on different ones of said strips causing different first pulses to be induced substantially simultaneously at different ones of said taps, and said means for detecting includes means for separately detecting the first pulse arrival times for different ones of said first pulses.

7. In combination, a plurality of first mutually insulated biased metal strips having parallel longitudinal axes, a plurality of second mutually insulated biased metal strips having parallel longitudinal axes orthogonal to the longitudinal axes of the first strips, a delay line having a multiplicity of taps each of which is connected to one of said strips, the delay line having a predetermined characteristic impedance and a delay time between adjacent taps commensurate with the spacing between adjacent ones of the strips, and an impedance terminating one end of the delay line having a value substantially equal to the characteristic impedance.

8. The combination of claim 7 wherein another end of the delay line is terminated by a short circuit.

9. In a apparatus for determining the impact position of cosmic dust or other similar space particles on a detector, an array of electrically conducting, mutually insulated metal strips each having a different impact area for the particles, each of said strips including means for generating a different electric pulse in response to a particle having a line of flight in the impact area thereof, the strips of said array being arranged so that each strip uniquely indicates the spatial location of an impact, and means for converting the spatial position of the strip on which the line of flight exists into a time position.

10. The apparatus of claim 9 wherein the means for converting includes a delay line having a plurality of spaced taps each connected to a different one of the strips.

11. In an apparatus for determining the impact position of cosmic dust or other similar outer space particles on a detector, an array of electrically conducting, mutually insulated metal strips each having a different impact area for the particles, each of said strips including means for generating a different electric pulse in response to a particle having a line of flight in the impact area thereof, the strips of said array being arranged so that each strip uniquely indicates the spatial location of an impact, whereby a pulse is derived from each strip in which the line of flight exists, means connected to all of the strips for deriving a replica of all of the derived pulses at a signal output terminal, and means connected to be responsive to the pulse replicas at the signal output terminal for distinguishing the spatial location of different impacts that occur substantially simultaneously on different ones of said strips.

12. The apparatus of claim 11 further including means connected to be responsive to the pulse replicas at the signal output terminal for deriving a signal indicative of the mass of the particle of each distinguished impact.

13. The apparatus of claim 11 further including means connected to be responsive to the derived pulses for deriving a signal indicative of the mass of the particle of each distinguished impact.

* * * * *