Oct. 16, 1951 H. O. IRMSCHER 2,571,138

INFUSION PACKAGE WITH EXPANDABLE BOTTOM AND METHOD OF MANUFACTURE THEREOF

Filed Oct. 24, 1949

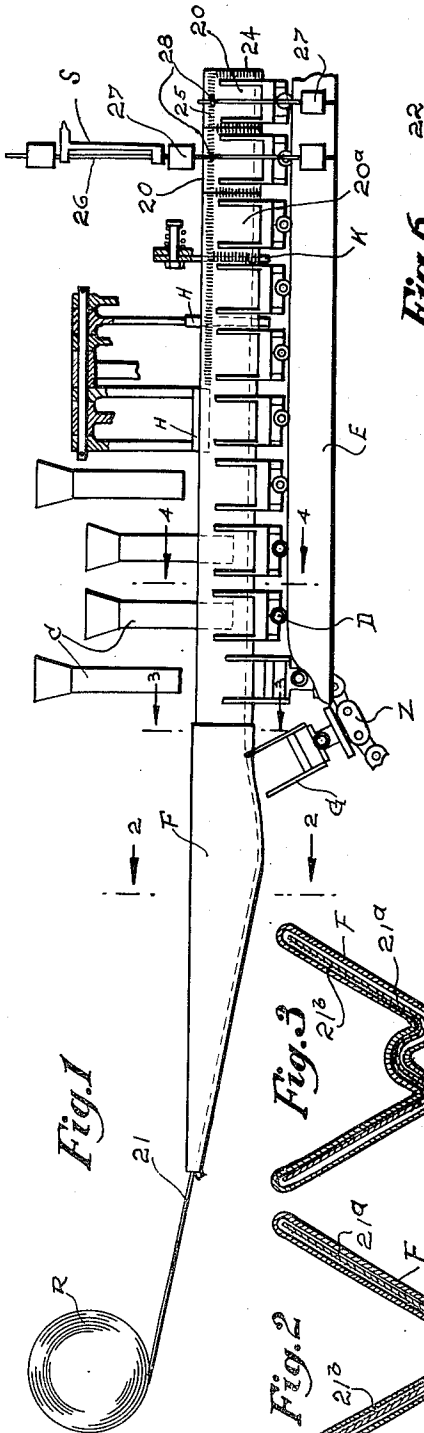

Fig. 1

Fig. 3

Fig. 2

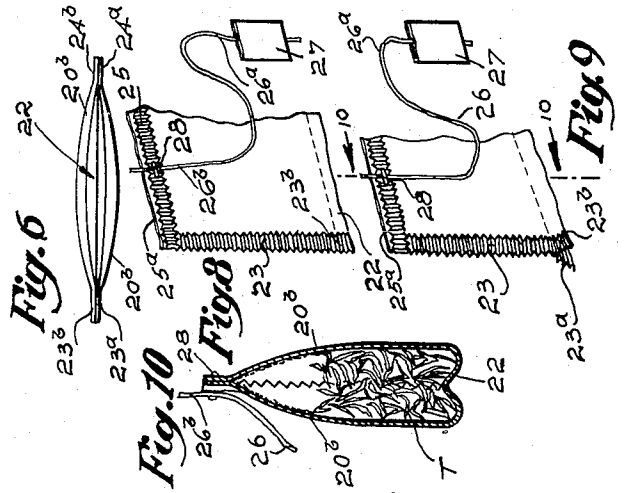

Fig. 6

Fig. 9

Fig. 8

Fig. 10

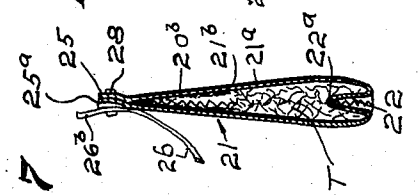

Fig. 7

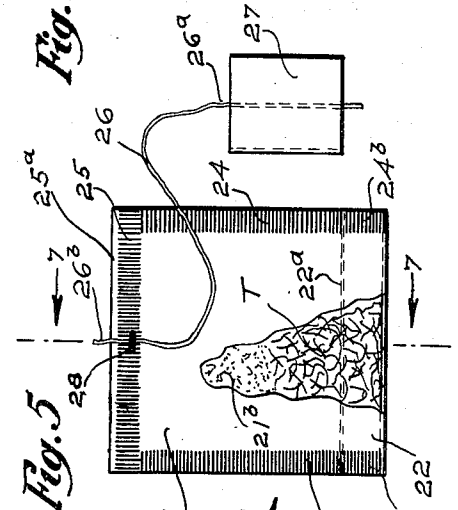

Fig. 5

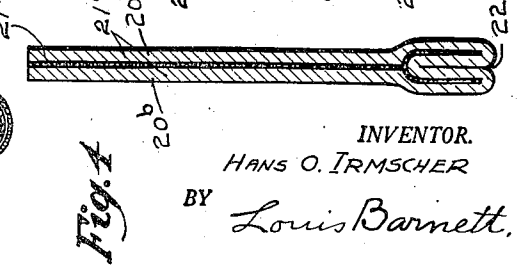

Fig. 4

INVENTOR.
HANS O. IRMSCHER
BY Louis Barnett.

Patented Oct. 16, 1951

2,571,138

UNITED STATES PATENT OFFICE

2,571,138

INFUSION PACKAGE WITH EXPANDIBLE BOTTOM AND METHOD OF MANUFACTURE THEREOF

Hans O. Irmscher, East Hempstead, N. Y., assignor to National Urn Bag Co. Inc., a corporation of New York

Application October 24, 1949, Serial No. 123,145

9 Claims. (Cl. 99—77.1)

1

This invention relates to an infusion package manufacture and more particularly is directed to an improved expandable construction of infusion packages such as incorporated in tea balls and the like articles, and to a novel method of producing same economically.

Among the objects of the invention is to provide infusion packages as inexpensive articles of manufacture, which shall be capable of quantity production on automatic high-speed packaging machines, which shall have joint seams retain against separation by suitable adhesive means, such for example, as by a heat sealing process to provide an improved form of tea bag having a minimum of foreign matter and normally of small economical size capable of expanding during a brewing operation to diminish the time for brewing relative to that required when otherwise constructed, and which construction and a method of manufacture thereof shall be practical and efficient to a high degree in use.

Other objects of the invention will in part be obvious and in part hereinafter pointed out. The invention accordingly consists of feature of construction and method of combination elements, arrangement of parts and steps in the process of manufacture which will be exemplified in the construction and method hereinafter described, and of which the scope of application will be indicated in the following claims.

Fig. 1 is a side elevational view of a manufacturing layout, partly diagrammatic, showing steps in producing infusion packages each with an infolded expandable bottom in the form of an inverted pleat embodying the invention.

Figs. 2, 3 and 4 are cross-sectional views taken on lines 2—2, 3—3 and 4—4, respectively, in Fig. 1 showing the web folding in successive phases in forming the improved infolded expandable bottoms of the tea-balls body portions in practing the improved method.

Fig. 5 is a front elevational view of an improved tea ball manufactured to embody the invention with an inverted pleat expandable bottom construction as supplied in packaging and and distribution before using.

Fig. 6 is a bottom plan view of the improved tea ball shown in Fig. 5.

Fig. 7 is a cross-sectional view taken on line 7—7 in Fig. 5, showing details of the inverted pleated expandable bottom construction.

Fig. 8 is a fragmentary perspective view of the improved tea-ball shown in Fig. 5 showing the exterior region of the corner formed between the side or transverse edge seam joint and said

2

inverted pleat bottom structure before expansion.

Fig. 9 is a fragmentary perspective view corresponding to Fig. 8 but showing the side or transverse edge seam joint and the bottom corner region expanded during the brewing operation, and

Fig. 10 is a cross-sectional view taken on line 10—10 in Fig. 9 showing said inverted pleat expanded bottom construction during the brewing operation.

Referring in detail to the drawing 20 denotes an improved construction of an infusion package in the form of a square pillow-shaped tea ball manufactured to embody the invention.

As seen from Figs. 5, 6 and 7, tea ball 20 may comprise a bag portion 20*a* made of a strip of filter sheet material 21 folded over on itself, and provided with an expandable bottom, that is, creased edge portions 22 forming between superimposed layers of overlying flattened exterior sides 20*b* of tea ball 20. Exterior sides 20*b* are adhesively secured on the remaining three edge portions of the margin areas thereof at side edge border joint seams or flanges 23 and 24, and top edge border joint seam 25 to completely seal the tea-ball bag 20*a* which is partially filled with essence containing product, as for example, tea, T, forming the contents thereof.

The strip of filter sheet material 21 may be supplied from a suitable source in the form of a web of the required width, a sufficient length of the web being cut and folded and creased to form the tea bag 20*a*, or if desired precut strips of sheet material 21 of proper shape and length may form such supply source (not shown).

Sheet material 21 may be of foraminous, as for example, filter paper, finely perforated parchment paper or cellophane, cotton gauze or the like. Sheet material 21 used in the practicing of the invention here described has a filter paper base layer 21*a* coated on one side with a preconditioned thermosetting plastic lamina 21*b* of a character such as described in Menzel Patent No. 2,306,400, granted December 29, 1942, or other similar suitable filter sheet base layer coated with thermosetting plastic lamina for forming said heat sealed border joint seams or flanges 23, 24 and 25 in the manner hereinafter more fully described.

A suitable filter paper sheet forming base layer 21*a* may be made of vegetable fibrous pulp stock, said layer 21*a* with thermosetting coating of lamina 21*b* being such that when made into the tea-ball bag portion 20*a*, the latter has sufficient

wet strength to withstand immersion in boiling water without damage or distintegration and without undue loss of tensile strength. The filtering sheet material **21** comprising the layer **21***a* and coating **21***b* when forming the tea-ball bag portions **20***a* must be such as to permit ready infusion, that is, rapid circulating passage therethrough of the water of immersion for brewing and straining the filler or tea contents T, said layer **21***a*, coating **21***b* and flanges **23, 24 and 25** being of such composition that it is non-toxic, insoluble in hot boiling water, and imparts no odor or taste even to the slightest degree to the brew.

It has been found in practice that a 6½ pound fibrous pulp stock sheet of approximately .001 inch thick of high wet tensile strength forms a satisfactory filter paper layer **21***a* for the purposes described herein. Such layer **21***a* carrying an extremely thin film of a suitable resin, such as copolymer of vinyl chloride and vinyl acetate uniformly spread on one side thereof in an adhering dry state provides a satisfactory, pervious coating or lamina **21***b* which does not materially affect the filtering capacity of the layer **21***a*. Approximately three ounces of such vinyl resin when used for each pound of said layer **21***a* will form said coating or lamina **21***b* of normally less than .0005 inch thick.

Sheet material **21** after taken from a supply source such as roll R, may be made into the tea-ball bags portions **20***a* and filled with the contents, T, the tea-ball bag portions **20***a*, each having the coating **21***b* of the sheet material **21** positioned on interior surfaces thereof so that the border edge joint seams or flanges **23, 24** and **25** are sealed on placing the coating portion **21***b* thereof in face to face relation and applying pressure and heat to a fusion temperature by suitable clamping means of any well known construction. With the coating or lamina **21***b* formed of a conditioned vinyl resin permanent sealing fusion will take place when pressure and heat of approximately 130° C. is applied.

Since it has been found highly desirable to use a minimum of foreign material in making up infusion packages such as tea balls **20**, so as to eliminate possible contaminations that might affect the flavor of the brew, each bag portion **20***a* is made as small in dimensions as possible to require the least amount of filter sheet material **21** for obtaining a satisfactory brew from a predetermined contents T. Such prescribed size of bag portion **20***a* also results in economy of material, group packaging and transportation.

Furthermore, it has also often been found advantageous to carry out the brewing operation as quickly as possible while the water is in a boiling condition to produce what is recognized the best brew, that is, the most perfect degree of extraction of essence from a given contents T in the shortest period of time.

To these ends, tea ball **20** is provided with said creased edge portions or expandable bottom **22** infold as in inverted pleat **22***a* which is normally concealed within the bag portion **20***a* as shown in Figs. 5 and 8. Said body portion **20***a* is so constructed and arranged that when it is immersed in or subject to the action of boiling water the inverted pleat **22***a* automatically unfolds to immediately present and make fully available increased filter surfaces at said expandable bottom **22** which also allows for expansion of the tea contents T during the brewing operation yet said tea balls **20** can be made most economically in quantity production at extremely high manufacturing speed requiring a minimum of material and labor.

In the manufacturing of infusion packages such as tea-balls **20** and the like, there is provided some form of string-handle **26** to manipulate the tea-ball **20** during the brewing operation which may be carried out in a drinking vessel, such as a cup, and also a tag **27** which may bear a legend such as the name or trade-mark of the manufacturer, grade of tea, etc. Such string-handles **26** may each be attached to the tea-ball bag **20***a* in any suitable manner, and the free end **26***a* of the string handle **26** terminated by the tag **27**.

Bag portions **20***a* after being filled with the contents T, have top edge and side border joint seams **25, 24** and **23** heat sealed and each bag portion **20***a* then provided with string-handle **26** which may be anchored by one end **26***b* thereof, opposite said free end **26***a*, through suitable means, such as a staple **28** to the top edge border joint seam **25** which as seen in the completely manufactured tea ball **20** in Fig. 5 to extend along a top edge of bag portion **20***a* opposite said expandable bottom **22**.

As is clear from Figs. 6 to 10, the side edge border joint seams or flanges **23** and **24**, each having relatively short branches **23***a*, **23***b* and **24***a*, **24***b*, respectively, extend into opposite corner regions of bag portion **20***a* which regions are formed by said branches **23***a*, **23***b*, and by branches **24***a* and **24***b* at opposite ends of expandable bottom **22**, so that, when tea ball **20** is first immersed into water for brewing, inverted pleat **22***a*, forming said bottom **22**, in expansion, automatically unfolds from the manufactured position shown in Figs. 5, 6 and 8, with corner regions and said branches **23***a*, **23***b* and **24***a*, **24***b* collapsed, that is, in abutment aligning with said joint seam or flange **23**, and **24**, respectively, to expand for brewing operation as shown in Fig. 9 with said joint seam branches **23***a*, **23***b* and **24***a*, **24***b* at said corner region unfolded and re-formed with respect to said joint seam or flange **23** and **24**, respectively, as an inverted flattened Y-shaped structure.

Thus tea bag **20***a* is self-transformed from the manufactured pillow shape with crimped side edge flanges **23** and **24**, infolded bottom **22** and collapsed crimped branches **23***a*, **23***b* and **24***a* and **24***b* shown in Figs. 5, 6, 7 and 8 to the improved brewing box-like bottom structure shown in Figs. 9 and 10.

The top edge border joint seam **25** of bag portion **20***a* may be constructed in the same manner as described in my Patent No. 2,458,169 issued January 4, 1949, said top seam joint **25** having unsealed extreme edges **25***a* of unbroken length extending from side edge seam joint **23** to side edge seam joint **24** and extending in width beyond the top joint seam **25** a sufficient distance to retain a flow of the heat sealing material from passing beyond said extreme edges **25***a* during fusion, said unsealed edges **25***a* being kept substantially free from heat sealing material to prevent fouling heat sealing means such as used in high-speed manufacturing of tea-balls **20**.

In the tea ball making art, a method of manufacture to have commercial utility must be readily adapted for incorporation in the operation of super and high-speed automatic machinery, so that low cost large scale production is made possible. It is contemplated to practice the improved method embodying the invention to include in the manufacturing operation the novel step of forming of said creased edge portions or expandable

bottom 22 infolded as an inverted pleat 22*a* which is normally concealed within the bag portion 20*a* as shown in Figs. 5, 6, 7 and 8. Suitable means for providing this additional step in the manufacture can be readily incorporated in present high and super high speed automatic machines of various types without extensive changes, and as here shown in Fig. 1 is incorporated in a super high-speed type such as is fully disclosed in my Patent No. 2,475,617, issued July 12, 1947, for manufacturing of tea ball 20.

The manufacturing layout shown in Fig. 1, which is partly diagrammatic, has said web of heat sealing filter paper sheet 21 continuously fed from the roll R and is longitudinally flexed by folder F, so that coating or lamina 21*b* of the flexed web sheet 21 is positioned to form the interior surfaces of tea bags 20*a*, and the border edges joint seams 23, 24 and 25, for presenting said lamina 21*b* in a face to face relation for pressure heat sealing. Simultaneously the web former F infolds said expandable inverted pleat 22*a* in said fold bottom 22. Said web sheet 21 thus flexed and folded is gripped transversely the length thereof between continuously moving pairs of closely spaced pincer jaws G.

Said jaws G are carried on endless chain belt Z and are controlled for effective opening and closing by suitable camming action of rollers D riding on rails E. Each jaw G is made U-shaped to grip the folded strip web sheet 21 transversely to form successive empty bag sections of said moving strip web sheet 21. Each bag section thus formed extends between forked portions of the jaws G leaving top edges of the bag sections open to project above the level of said jaws G.

As the empty bag sections continuously advance they are filled with a measured quantity of infusion product, such as tea leaves T, which during part of said advance movement flow into said bag sections top openings from a suitable charging mechanism (not shown) in the well understood manner, through moving funnels C that pass in and out of the bag sections and around in a closed path in timed relation with filling operation as fully described and shown in my said Patent No. 2,475,617. After each filling operation the top openings and transversely extending side closures between the adjoining filled bag sections are heat-sealed to form said crimped joint seams 25, and 24, 23, respectively, in multiple by pressure electric heated dies H provided for that purpose. Filled bag sections permanently heat sealed are then cut apart by suitable shearing means, such as knives K, to form individual filled tea bag portions 20*a* which continue uninterruptedly to advance.

Just after the knives K have been effective to leave, individual tea bag portions 20*a*, each between a pair of jaws G, a tag forming and string handle supply means automatically cooperates in time sequence with the advancing movement of the bag portions 20*a* to supply each with a string handle 26 and tag 27 and to anchor the same by staple 28 to the top edge joint seam 25. Such automatic cooperating tag forming and string handle applying means is fully described and shown in my copending application Ser. No. 79,034, filed March 1, 1949, for the manufacture of packages with string handles.

Thus in practising the invention, improved steps of manufacture are provided in which a part of the bottom 22 throughout the length thereof is simultaneously re-formed during the bottom inverted pleat folding operation to temporarily collapse the package structure so as to provide for automatical unfolded expansion during the infusion operation, or folding the moving web with a closed invertedly pleated bottom and heat sealing the transversely extending portions of the coated web to form side edge joint seams with temporarily abutting branches for expanding the pleated bottom throughout the length thereof during infusion operation.

It is thus seen, therefore, that there is provided an improved method of operation and article in which the objects of the invention are achieved and which are well adapted to meet all conditions of practical use.

As various possible embodiments may be made in the above invention for use for different purposes and as various changes might be made in the article embodiment and method above set forth, it is understood that all the above matters here set forth or shown in the accompanying drawing are to be interpreted as illustrative and not in a limiting sense.

I claim:

1. In an infusion package body portion construction of the character described having heat-sealed top and side edge joint seams provided with a suspension string handle anchored on a midportion of said top seam joint, a crease-folded bottom opposite said top seam joint for said body portion manufactured with an inverted pleat expandable along the entire length thereof, the side edge joint seams normally having collapsed branches in aligned abutment terminating said pleat for automatically unfolding during infusion operation of said package body portion construction when suspended by the string handle to re-form said crease folded bottom in making an expanded structure thereof with said branches moved out of said aligned abutment.

2. In an infusion package body portion construction of the character described having heat-sealed side edge joint seams and a top closure joint, a suspension string handle anchored to a midportion of said top closure joint, a crease-folded bottom opposite said top closure manufactured with an inverted pleat expandable along the entire length thereof, the side edge joint seams normally having collapsed branches in aligned abutment terminating ends of said crease-folded bottom constructed and arranged to automatically unfold during an infusion operation when suspended by the string-handle for re-forming said crease-folded bottom to expand the structure thereof with the branches of each joint seam separated from said aligned abutment to a relatively inverted Y-formation.

3. An infusion package of the character described comprising an essence filled rectangular-shaped bag portion formed of filter paper having a thermo-plastic coating on one surface thereof folded over on itself with said coating in face to face relation, a creased bottom formed in said folded over bag portion with an expandable open-ended inverted pleat, portions of the coating at sides and top edge border of the bag portion being heat and pressure sealed to form side edge joint seams and top closure for enclosing the filled essence in the bag portion, said side edge joint seams when manufactured having extension branches bordering said open ended inverted pleat in temporary abutment alignment of collapsed construction at opposite corners of said creased bottom which said extension branches during brewing operation of the essence

self-transform from a pillow shape bag portion to unfold said inverted pleat for providing a box-like expanded bottom structure for said bag portion with said joint seam extension branches separating out of said alignment.

4. An infusion package comprising an essence filled bag portion formed of filter paper having a thermo-plastic coating on one surface thereof folded-over on itself with said coating in a face to face relation, a creased bottom between said folded-over portion forming an expandable open-ended inverted pleat, heat sealed joint seams formed with portions of the coating at the sides and top edge border of the bag portion for enclosing the filled essence therein, said edge joints having extension branches bordering an open-ended inverted pleat normally in temporary abutment of a collapsed construction at opposite corners of said creased bottom which said extension branches self-transform during infusion operation by unfolding said pleat to assume a relatively inverted Y-formation, and a string-handle anchored to a midportion of the top edge border joint seam opposite said pleated bottom.

5. In an infusion package construction, a pillow-shaped bag portion formed of a filter paper sheet having a thermo-plastic coating on one surface thereof folded-over on itself with said coating in face to face relation, heat-sealed joint seam produced with said coating for enclosing an essence product in said bag portion, and an open-ended inverted pleat formed in said folded-over portion of said sheet to provide a bottom automatically expandable the entire length thereof during infusion operation of said essence in the bag portion.

6. In a method of manufacturing rectangular-shaped infusion packages each having a suspension string-handle and an expandable bottom opposite said handle in a continuous unbroken sequence, the steps of folding a moving web of filter paper having a porous thermo-plastic sealing coating lengthwise with a closed bottom and open top and simultaneously invert pleating a part of said bottom for forming a collapsed construction thereof, temporarily retaining spaced predetermined portions transverse of the folded and pleated web to provide package body sections, moving charges of an infusion product in the path of movement of said sections, filling said sections with said charges while being moved, heat and pressure sealing said top and temporarily retained transverse portions to provide permanent closure joint seams, successively severing the leading filled package section to provide individual sealed package bodies, and anchoring a string handle midway the top seam joint closure opposite said pleated bottom with said pleated bottom preconditioned to automatically re-form from said collapsed construction for expansion during infusion operation.

7. In a method of manufacturing infusion packages of the character described, the steps of folding a moving web of filter paper having a porous thermo-plastic sealing coating lengthwise to provide a closed bottom and open top, and simultaneously re-forming a part of said bottom throughout length thereof to temporarily collapse the package bottom structure for automatically unfolded expansion during infusion operation.

8. In a method of manufacturing infusion packages of the character described, the steps of folding a moving web of filter paper having a porous thermo-plastic sealing coating lengthwise to provide a closed invertedly pleated bottom, and heat sealing spaced transversely extending portion of said coated web to form side edge joint seams with temporarily abutting branches of each package for expanding the pleated bottom throughout the length thereof during infusion operation.

9. In the method of manufacturing infusion packages of the character described, the steps of folding a continuously moving web of filter paper having a porous thermo-plastic sealing coating lengthwise to provide a closed bottom and open top and simultaneously re-forming a part of said bottom throughout the length thereof with an inverted pleat, and heat sealing spaced transversely extending portion of the coated web to form side edge joint seams with temporarily abutting branches of each package for expanding the pleated bottom throughout the length thereof during infusion operation.

HANS O. IRMSCHER.

REFERENCES CITED

The following references are of record in the file of this patent:

UNITED STATES PATENTS

Number	Name	Date
2,186,087	Yates	Jan. 9, 1940
2,306,399	Menzel	Dec. 29, 1942