April 16, 1963 S. MEURER 3,085,557

COMBUSTION CHAMBERS FOR PISTONS

Filed Dec. 8, 1960

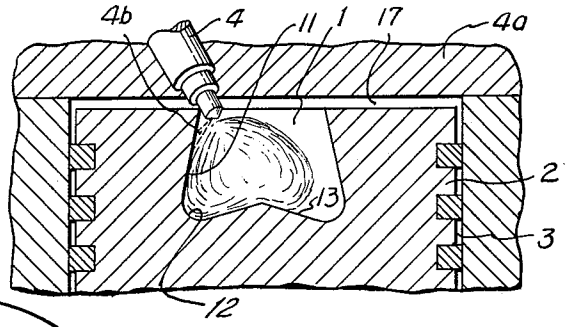

Fig. 1

Fig. 3

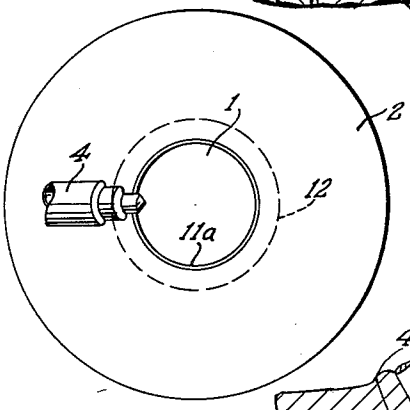

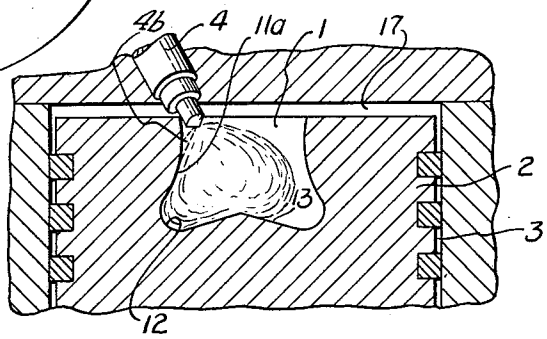

Fig. 2

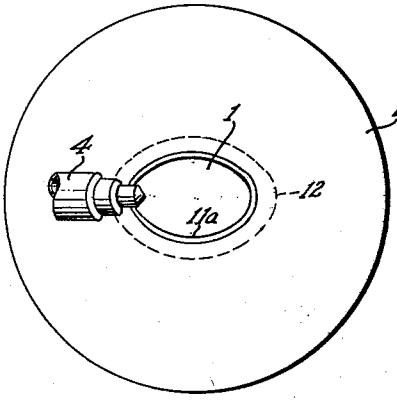

Fig. 4

INVENTOR

Siegfried Meurer

BY

Bailey, Stephens & Huettig

ATTORNEYS

United States Patent Office

3,085,557

Patented Apr. 16, 1963

1

3,085,557
COMBUSTION CHAMBERS FOR PISTONS

Siegfried Meurer, Nurnberg, Germany, assignor to Maschinenfabrik Augsburg-Nurnberg, Nurnberg, Germany

Filed Dec. 8, 1960, Ser. No. 74,653
Claims priority, application Germany July 7, 1957
3 Claims. (Cl. 123—32)

This invention relates to combustion chambers for pistons. In particular, the invention is directed to combustion chambers for self-ignition engines.

This application is a continuation-in-part of my application Serial No. 740,908, filed June 9, 1958, now Patent 2,975,773, issued Mar. 21, 1961, for "Combustion Chambers for Pistons."

The piston of this invention is designed to operate in self-ignition engines such as disclosed in U.S. Patent No. 2,907,308. In such engine, the liquid fuel is injected into a hollow combustion chamber in the piston. The injection is made in such a way that the major portion of the fuel travels over a short free path and is applied immediately to the wall of the combustion chamber. After striking the chamber wall, the fuel spreads out as a film over a part of the wall. The remaining minor portion of the fuel is atomized directly in the air in the chamber and is self-ignited for igniting the fuel vaporized from the film of fuel. Combustion air is swirled over the film of fuel to vaporize the same.

In these engines, it is desirable to have the fuel cover as much as possible of the chamber wall. If the chamber, as in former pistons, is spherical or ellipsoidal and the fuel strikes the wall at a sharp angle, the fuel is spread as a film in a satisfactory maner. Because of the kinetic energy of the fuel, it has a tendency to spread peripherally about the wall of the combustion chamber. However, in these chambers, the spreading of the fuel is handicapped by the concave curve of the spherical or ellipsoidal chamber. Such chamber forms act in the nature of a groove with the fuel tending to flow along the bottom thereof and not completely spread out.

The object of this invention is to produce a combustion chamber formed as a body of rotation and having a shape such that the fuel will spread out evenly in all directions on the wall of the chamber.

In an engine of this type, it is a requirement that the length of the fuel jet be kept as short as possible, that the fuel jet itself be solid, and that the jet be applied as tangentially as possible to the wall of the combustion chamber. In pistons having a small diameter, these demands can be complied with easily. Difficulties arise as the diameter of the piston increases. This invention is used especially when the combustion chamber is to have a large volume in proportion to its height. A chamber is in the form of a truncated cone. The bottom of the chamber is also conical with the apex of the bottom pointing toward the interior of the chamber. Thus the chamber is in the form of a hollow conical section forming the side wall and the bottom is shaped as a torus.

Combustion chambers are known which are in the form of a truncated cone having straight side walls and the bottom of which is downwardly and concavely formed. Such a chamber has an unavoidable disadvantage in that a part of the fuel sprayed onto the wall of the chamber is deflected to the downwardly curved bottom by the effect of the air swirling around the longitudinal axis of the chamber and the fuel collects in the bottom in the form of a relatively thick layer or pool. Consequently, the fuel in the pool cannot mix intensively with the swirling combustion air during the short time available for combustion with the result that the actual combustion takes place irregularly and incompletely. Furthermore, in such chamber, the fuel jet is directed

2

diagonally or even perpendicular to the air swirl so that a part of the fuel will be mixed directly with the combustion air during its travel from the nozzle to its point of impingement on the chamber wall and more than the usual quantity of fuel thereby atomized. Such is avoided by the shape of the combustion chamber of this invention.

The means by which the objects of the invention are obtained are described more fully with reference to the accompanying drawings, in which:

FIGURE 1 is a longitudinal cross-sectional view through a piston in a cylinder with the piston having a combustion chamber according to this invention;

FIGURE 2 is a similar view of a modified form of the invention;

FIGURE 3 is a plan view of the piston shown in FIGURE 2 with a combustion chamber of circular cross-section; and

FIGURE 4 is a similar view of the piston having a combustion chamber of elliptical cross-section.

As shown in FIGURE 1, the combustion chamber **1** is positioned in the piston head of piston **2**, the chamber being coaxial with the axis of piston **2** and cylinder **3**. A nozzle **4** is inclined in the cylinder head **4*a*** above the combustion chamber. The major portion of the injected fuel is applied to the combustion chamber wall by several fuel jets **4*b*** which are directed at a sharp angle toward the wall and form a film thereon. This film is vaporized from the wall and mixed with the air swirling in the chamber to produce a combustible fuel mixture. The minor portion of the fuel is atomized immediately in the air swirling in the chamber. This atomizing is accomplished by either deflecting a part of the injected fuel into the air or by a special ignition jet, not shown. As the fuel leaves the nozzle, it has a kinetic energy which moves the fuel circumferentially around and upon the combustion chamber wall.

In FIGURE 1, the combustion chamber is in the form of a cone and is coaxial with piston **2** and cylinder **3** and opens through the piston head. The side wall **11** of chamber **1** is connected by a curved portion **12** with the conical bottom **13**. As shown in FIGURE 1, side wall **11** appears as a straight line in that cross-sectional view. The apex of the cone of bottom **13** points to the interior of chamber **1**, thus the chamber has a conical side wall **11** and a bottom in the form of a torus.

As shown in FIGURE 2, the side wall **11*a*** of the combustion chamber is convexly curved to further enhance the spreading of the fuel over a large surface of the chamber wall. This is of especial importance for pistons having large diameters and used in engines as disclosed in U.S. Patent No. 2,907,308. The curved surface area of the combustion chamber can receive a large amount of fuel without the necessity of deepening the chamber. In addition, the fuel jet strikes the chamber wall adjacent the bulge formed by the curved walls. At this point, the bulge forms a narrowed chamber opening at which the swirling air has an increased velocity and therefor is more active in spreading the fuel evenly over a large wall area. The convexly curved wall **11*a*** also tends to guide the fuel film toward the bottom of the combustion chamber. In the bottom of the chamber, the curved portion **12** not only receives a film of fuel, but directs the air toward the conical projection which pushes the mass of rotating air up and against the fuel film on the chamber wall. Consequently, the fuel vaporized from the fuel film is immediately mixed with the air necessary for the combustion of the fuel-air mixture.

The combustion chamber can range in shape from an elliptical to a circular truncated cone. The vaporized fuel-air mixture on the bottom **13** of the chamber, as a result of the conical shape, is forced to flow toward the

top of the chamber and out of the chamber into the cylinder space **17** during the combustion stroke of the piston so that the fuel-air mixture is mixed with the remainder of the combustion air in the cylinder and therefore entirely ignited and burned.

Having now described the means by which the objects of the invention are obtained, I claim:

1. In a piston for a self-ignition internal combustion engine, said piston having a combustion chamber which opens through the piston head with a cross-sectional area less than the cross-sectional area at the bottom of said chamber for receiving substantially all of the combustion air in the cylinder as a unidirectional air swirl in said chamber during the piston compression stroke, and for receiving a film of fuel on the combustion chamber side wall, said fuel being supplied from a nozzle offset from the center of said chamber as a solid unatomized jet directed tangentially of the combustion chamber wall over the shortest possible path, the fuel then being vaporized from said wall and mixed with the combustion air,

the improvement comprising a chamber of large volume relative to its height and formed as a body of rotation with said side wall convexly curved toward the center of said chamber, a conical bottom surface with an apex pointed toward the center of said chamber, and a curved wall portion extending between said side wall and said bottom.

2. In a piston as in claim 1, said combustion chamber having a circular cross-section.

3. In a piston as in claim 1, said combustion chamber having an elliptical cross-section.

References Cited in the file of this patent

UNITED STATES PATENTS

2,828,724	Schneider	Apr. 1, 1958
2,881,743	Holt	Apr. 14, 1959
2,907,308	Meurer et al.	Oct. 6, 1959
2,959,161	Bottger	Nov. 8, 1960