Feb. 6, 1968 E. BONDESEN ET AL 3,367,063

POLYHEDRONAL ELEMENTS HAVING CONNECTOR ELEMENTS EXTENDING THROUGH ADJACENT WALLS

Filed Feb. 24, 1965 9 Sheets-Sheet 1

FIG.1.

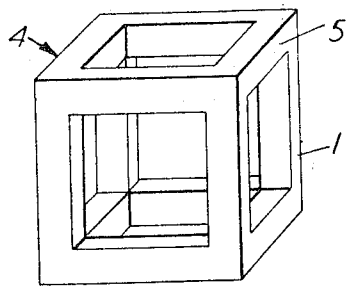

FIG.2.

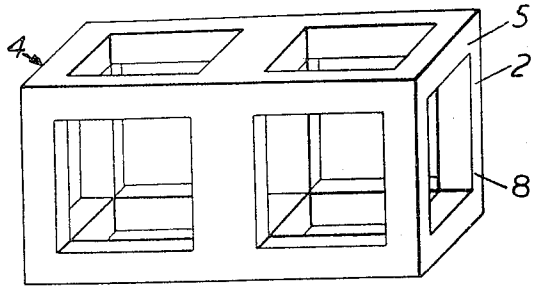

FIG.3.

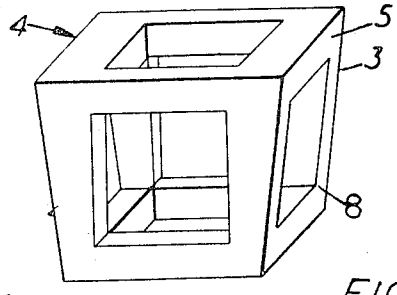

FIG.4.

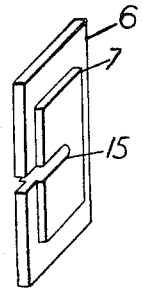

FIG.5.

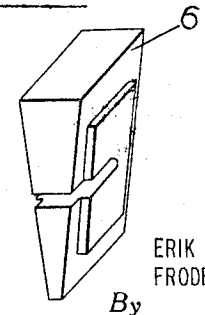

Inventors
ERIK BONDESEN
FRODE HANSEN
By
Irvine and Smiley
Attorneys

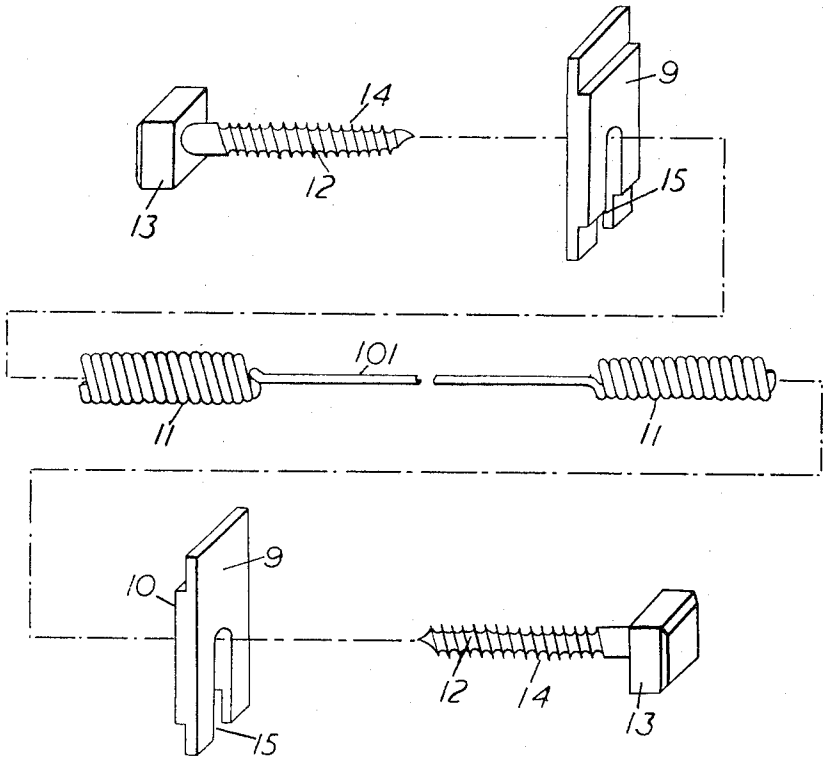

FIG.6.

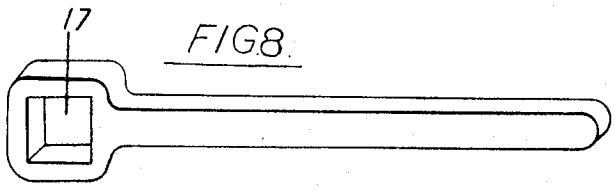

FIG8.

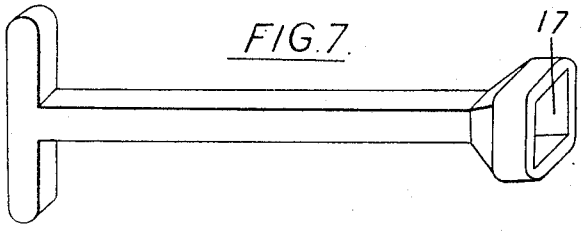

FIG.7.

Inventors
ERIK BONDESEN
FRODE HANSEN
By
Jennie and Smiley
Attorneys

Feb. 6, 1968 E. BONDESEN ET AL 3,367,063

POLYHEDRONAL ELEMENTS HAVING CONNECTOR ELEMENTS EXTENDING THROUGH ADJACENT WALLS

Filed Feb. 24, 1965 9 Sheets-Sheet 3

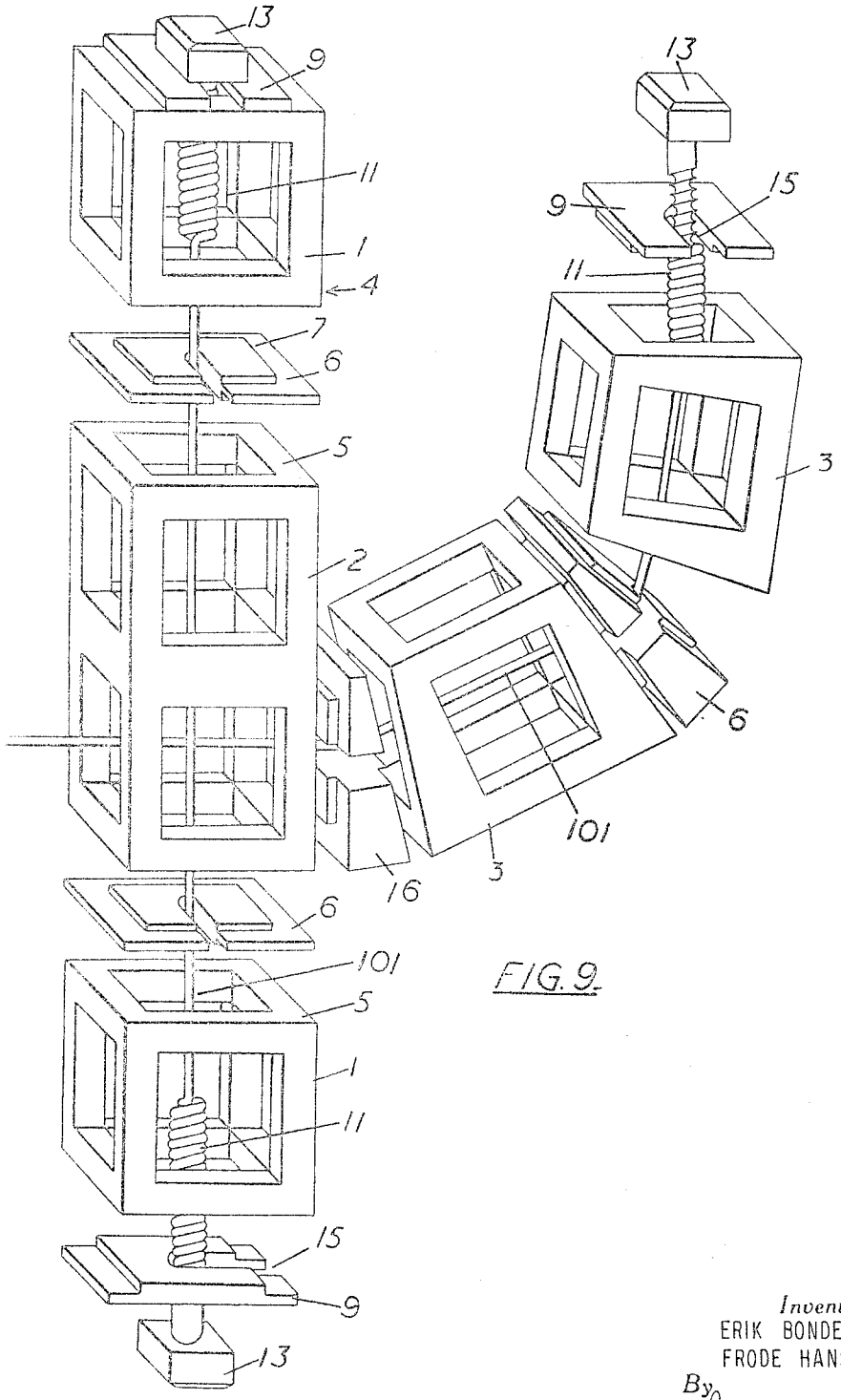

FIG. 9.

Inventors
ERIK BONDESEN
FRODE HANSEN
By Jennie and Smiley
Attorneys

Feb. 6, 1968 E. BONDESEN ET AL. 3,367,063
POLYHEDRONAL ELEMENTS HAVING CONNECTOR ELEMENTS EXTENDING THROUGH ADJACENT WALLS
Filed Feb. 24, 1965 9 Sheets-Sheet 4

FIG.10

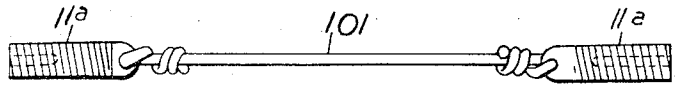

FIG.11A.

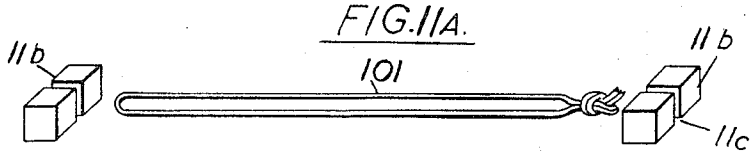

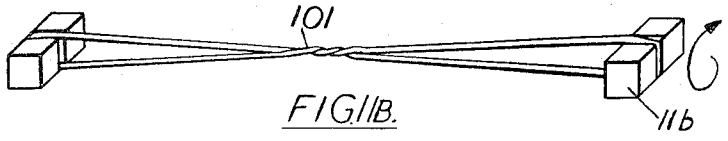

FIG.11B.

FIG.12.

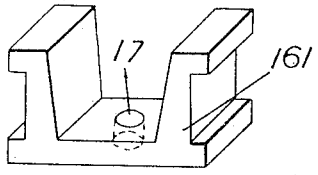

FIG.15.

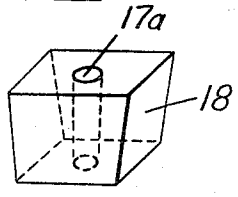

FIG.13.

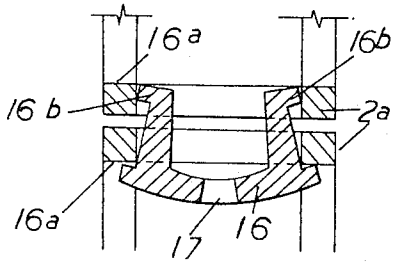

FIG.14.

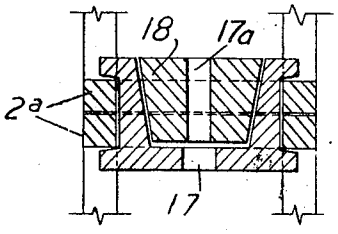

Inventors
ERIK BONDESEN
FRODE HANSEN
By
Jennie and Smiley
Attorneys

Feb. 6, 1968 E. BONDESEN ET AL 3,367,063
POLYHEDRONAL ELEMENTS HAVING CONNECTOR ELEMENTS EXTENDING THROUGH ADJACENT WALLS
Filed Feb. 24, 1965 9 Sheets-Sheet 5

FIG. 16.

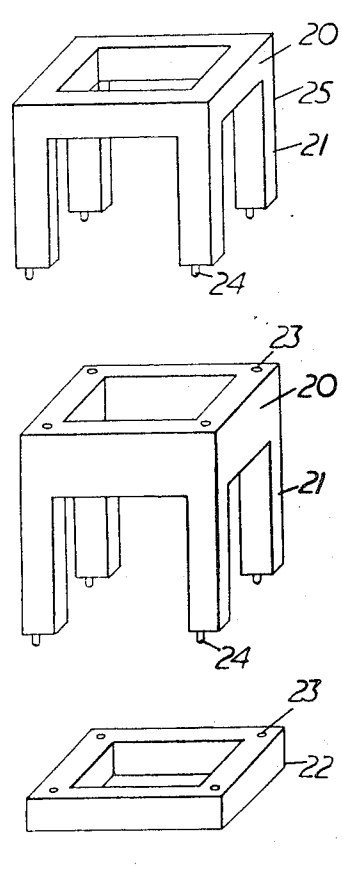

Inventors
ERIK BONDESEN
FRODE HANSEN
By Jennie and Smiley
Attorneys

Feb. 6, 1968 E. BONDESEN ET AL 3,367,063
POLYHEDRONAL ELEMENTS HAVING CONNECTOR ELEMENTS EXTENDING THROUGH ADJACENT WALLS
Filed Feb. 24, 1965 9 Sheets-Sheet 6

FIG.17

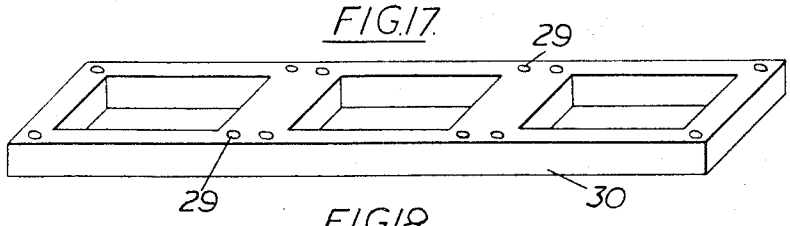

FIG.18

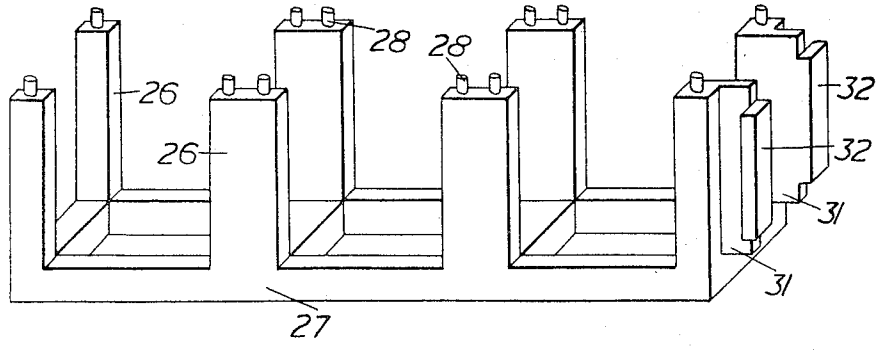

FIG.19

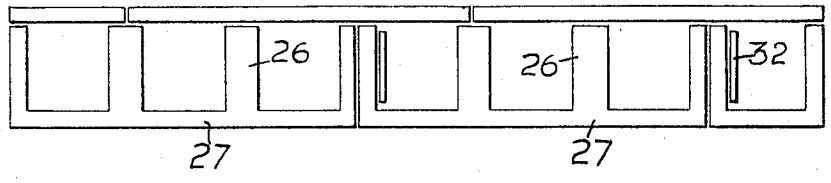

Inventors
ERIK BONDESEN
FRODE HANSEN
By Jennie and Smiley
Attorneys

Feb. 6, 1968 E. BONDESEN ET AL 3,367,063
POLYHEDRONAL ELEMENTS HAVING CONNECTOR ELEMENTS EXTENDING THROUGH ADJACENT WALLS
Filed Feb. 24, 1965 9 Sheets-Sheet 7

FIG20

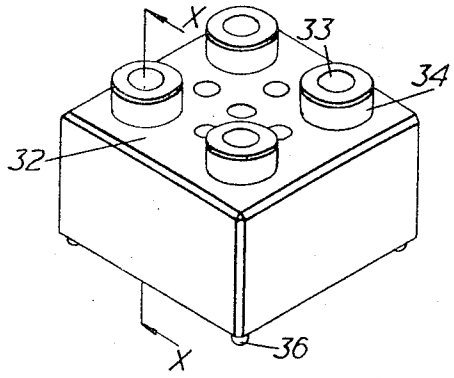

FIG21

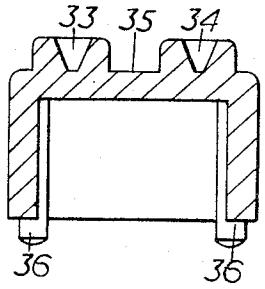

FIG22

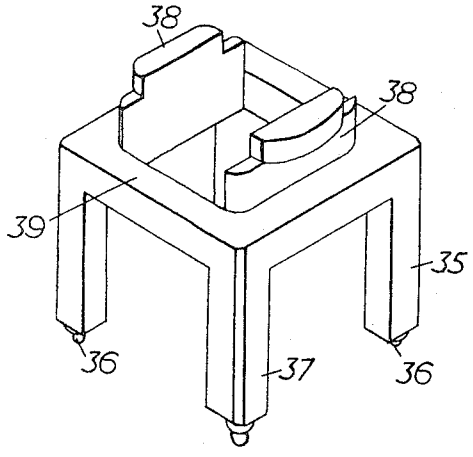

FIG23

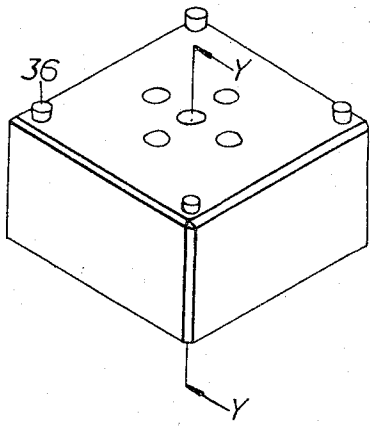

FIG24

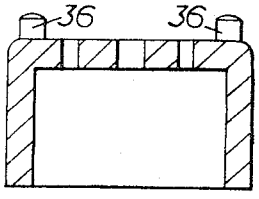

Inventors
ERIK BONDESEN
FRODE HANSEN
By Jennie and Smiley
Attorneys

FIG.26.

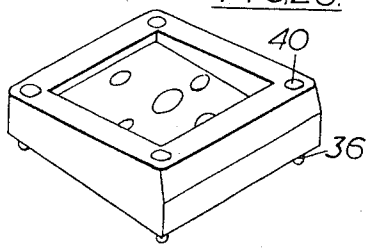

FIG.27.

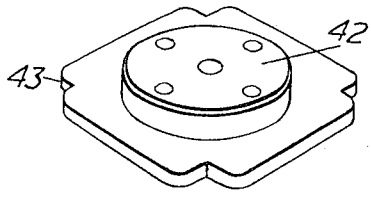

FIG.28.

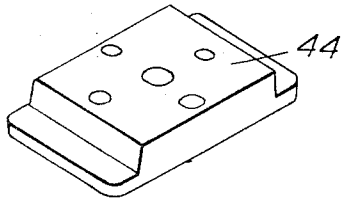

FIG.29.

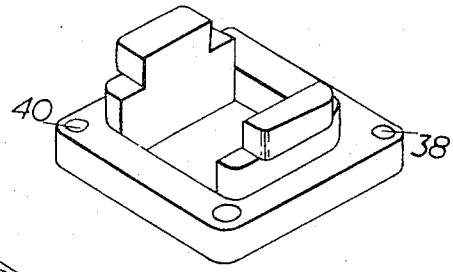

FIG.25.

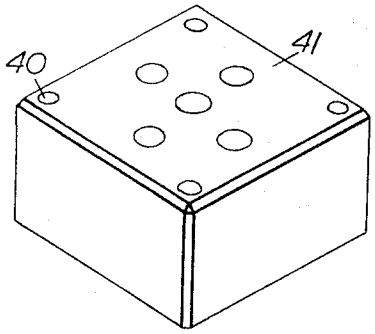

Inventors
ERIK BONDESEN
FRODE HANSEN
By Jennie and Smiley
Attorneys

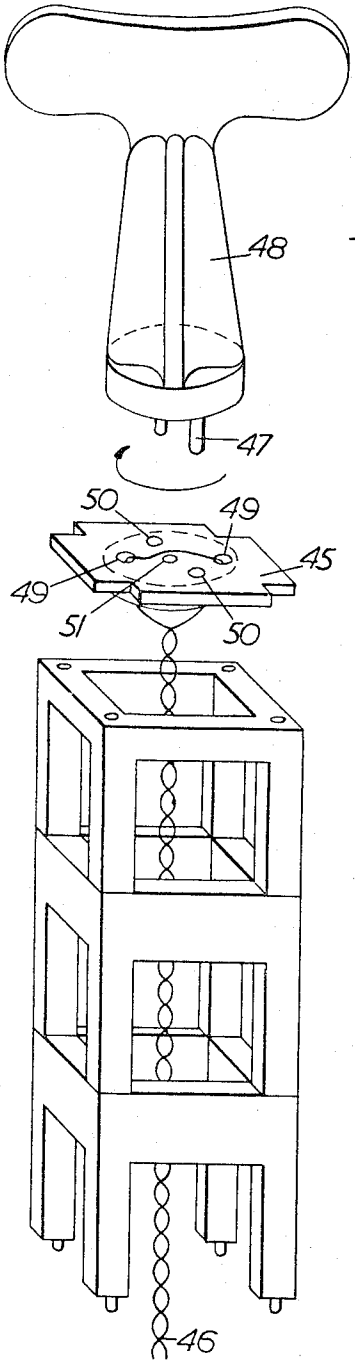

FIG.30

Inventors
ERIK BONDESEN
FRODE HANSEN
By Jennie and Smiley
Attorneys

United States Patent Office

3,367,063

Patented Feb. 6, 1968

3,367,063

POLYHEDRONAL ELEMENTS HAVING CONNECTOR ELEMENTS EXTENDING THROUGH ADJACENT WALLS

Erik Bondesen, Aalsgaarde, Copenhagen, Denmark, and Frode Hansen, 12 Links Road, Epsom, Surrey, England

Continuation-in-part of application Ser. No. 147,344, Oct. 24, 1961. This application Feb. 24, 1965, Ser. No. 434,859

Claims priority, application Great Britain, Oct. 25, 1960, 36,636/60; Oct. 10, 1963, 40,094/63

5 Claims. (Cl. 46—26)

This application is a continuation-in-part of application Ser. No. 147,344, filed Oct. 24, 1961, now abandoned.

This invention relates to a set of polygonal members for erection into a constructional unit and which can be used for instructional purposes or in the form of a toy.

In civil enginneering a complicated concrete structure can be split into a number of simpler units capable of being prefabricated on a mass production scale, and which can be joined together to form monolithic structures by stress members so that the compression thereby applied through the built-up structure results in the joints between the units resisting the forces acting on the final structure in any direction.

The main object of the present invention is to provide a set of members for erection into a constructional unit such that the members of the set can be prefabricated on a mass production basis and can be employed for erection of constructional units of a wide variety of shape and design.

According to the present invention a set of elements for erection into a constructional unit comprises a number of polyhedronal elements each having an aperture extending between and through a pair of generally opposite outer faces thereof, a joint element disposable in contact with contiguous outer faces of any two juxtaposed polyhedronal elements and having on each face a profile engageable in contiguous profile of each polyhedronal element, terminal elements engageable with the end polyhedronal elements of the assembled unit, and a stressing element or elements locatable with respect to the assembled elements to maintain all the assembled elements under compression, thereby forming a constructional unit.

Preferably the faces of each joint element engageable in the polyhedronal elements have a similarly shaped profile to the contiguous faces of the polyhedronal elements. The stressing element may be formed by an elongated element of a length sufficient to enable it to be located within the assembled elements under tension so that it will maintain all the assembled elements under compression.

The terminal members preferably each have a profiled face similar to the profile of the joint element and, so disposed on said face as to be located in the longitudinal axis of the assembled unit, a member to which the ends of the stressing member can be connected under tension to compress the assembled elements together.

The profile on the faces of the polyhedronal joint and terminal elements are preferably in the form of interengaging recesses and protrusions of a construction which will prevent rotation of the assembled elements about the longitudinal axis thereof.

The said recesses and protrusions may be polygonal or otherwise non-symmetrical about the said axis and a number of the recesses and protrusions may be formed on each element face.

At least some of the polyhedronal elements may have two or more pairs of opposing apertured faces, the apertures on all the faces communicating with the aperture through the element, which may be a hollow interior of the element, and constituting the said profiles.

The opposing profile faces of the polyhedronal elements may be parallel or at such angles to each other as to ensure that when the stressing element is secured under tension within the remaining elements said stressing element will maintain the remaining elements under compression thereby forming a constructional unit.

The polyhedronal elements are each preferably in the form of hollow frames having a plurality of open frame-like faces, the inner periphery of each frame forming a profiled recess to receive a similarly shaped raised profile on a joint element.

The stressing element may comprise a member passing through the apertures in the remaining assembled elements, means being provided to cause a tensile force in the stressing element to maintain the remaining assembled elements in compression. In another construction the stressing element comprises a loop of nylon, rubber or like strand or strip, and blocks, rods or the like preferably notched or apertured to receive the loop ends are disposed at least one at each loop end, the loop being of such a length for a predetermined number of the remaining elements as to be insertable through said elements and twistable to exert a compressive force between the assembled elements through the blocks, rods or the like.

In order that the invention may be more clearly understood some embodiments thereof will now be described, by way of example, with reference to the accompanying drawings, in which:

FIGURE 1 is a perspective view of a polyhedronal element for use as one of the set of members;

FIGURES 2 and 3 are perspective views of alternate forms of polyhedronal elements;

FIGURE 4 shows a perspective view of a joint element;

FIGURE 5 is a similiar view to FIGURE 4 of an alternative form of joint element;

FIGURE 6 is an exploded view of the terminal elements, a stressing element and the members by which the terminal elements are secured in the erected constructional unit;

FIGURES 7 and 8 are perspective views of tools used in tensioning the stressing element during erection of the constructional unit;

FIGURE 9 is a perspective view of the set of members being assembled into two forms of the constructional unit, which are in fact connected together;

FIGURE 10 shows another form of stressing element;

FIGURES 11A and 11B show respectively the parts of yet another form of stressing element, and, such parts assembled and twisted to indicate how the tension is applied by the stressing element to the assembled elements;

FIGURES 12 and 13 show respectively a construction of a joining element, the method of locating it to hold the polyhedronal elements together;

FIGURE 14 is a sectional view of a locking element assembled with the joining member of FIGURES 12 and 13;

FIGURE 15 shows a perspective view of the locking element of FIGURE 14 which is adapted to be inserted in the joining member of FIGURES 12 and 13 to prevent accidental dislodgment of the joining member;

FIGURE 16 is a view of polyhedronal elements which can be united to form a single polyhedronal element;

FIGURES 17 and 18 show the parts of another form of polyhedronal element;

FIGURE 19 shows a manner of assembling the elements as in FIGURES 17 and 18 so that the joints be-

tween elements and the parts of the elements are staggered,

FIGURES 20–29 show further forms of polyhedral elements which can be used in the set; and

FIGURE 30 shows several polyhedral elements interengaged to form part of a constructional unit, the terminal element and tensioning tool being shown detached for clarity.

In the drawings the same references have been used to designate the same or similar parts.

Referring to the drawings a set of elements for erection into a construction unit such as is shown in FIGURE 9 comprises a number of polyhedronal elements **1**, **2** or **3**, each having an aperture therethrough constituted by a hollow interior extending between and through a pair of generally opposite outer faces **4**, **5**; in FIGURES 1 and 2 the faces **4** and **5** are parallel but, as shown in FIGURE 3, they may be at an angle other than 90° to the other face of the polyhedronal element. A joint element **6** is shaped for disposition in contact with the contiguous outer faces, e.g. **4** or **5**, of any two juxtaposed elements **1**, **2** and **3** and each has a face **7** profiled to engage in a contiguous profile **8** comprising first connection means, preferably similarly shaped thereto, in each of the elements **1**, **2** or **3**.

Terminal elements **9** (FIGURE 6) are provided for engagement with the end polyhedronal elements of the assembled constructional unit and each terminal element **9** has a profiled face **10**, preferably similarly shaped to the face **7** of the element **6** as shown, for engagement in the shaped profile **8** of the polyhedronal element. All the profiled faces **7**, **8** and **9** are preferably as shown in the drawings of the same dimensions of length and breadth whereby all the elements are capable of being interchanged, thereby enabling the parts to be built-up in a number of different constructional units.

A stressing element **101** (FIGURE 6) is provided including a resilient portion **11** at one end or, as shown in FIGURE 6, at both ends. The stressing element is an elongated elements of a length sufficient to suit a predetermined number of polyhedronal elements and their interposed joint elements so that, when connected as herein described, the stressing element being under tension will maintain all the elements under compression comprising second connection means.

To this end the stressing element is used with fixing members **12** each having a head **13** and a shank screw-threaded as at **14** for threading into the portion or portions **11** of the stressing element. The joint elements and the terminal elements have central apertures which, in the forms shown in FIGURES 4, 5 and 6, extend as slots **15** to one edge of the elements to facilitate assembly of the set and through which the members **12** pass. In erecting the set into a constructional unit the fixing member **12** is engaged into the upper ends of the members **11** of the stressing element and, by screwing the fixing members into the portions **11**, the heads **13** will engage the terminal members **9**, thereby, as they are screwed further, tensioning the stressing element.

The manner of erecting the set of elements into a constructional unit is shown in FIGURE 9. In FIGURE 9 a vertical unit is shown being assembled and, attached to one face of the central polyhedronal element of the form shown in FIGURE 2, has built onto one side a second constructional unit employing the polyhedronal element of FIGURE 3 and the joint element of FIGURE 5 and a further joint element **16**, this additional unit being of arcuate form and connected to the first unit through the joint element **16**.

It will be seen that the polyhedronal elements are threaded onto the stressing element **101** and, while they are spaced apart, the joint elements **6** are slipped onto the stressing element, the terminal elements **9** are slipped over the fixing members **12**, one on each end, which are being screwed into the portions **11** of the stressing element. By

screwing the fixing members **12** into the portions **11** the elements are all brought into surface contact, the shaped profiles of the various elements fitting one into the other. Ultimately, when the fixing members have been screwed firmly into position the whole will be a stable constructional element in equilibrium with the stressing element in tension disposed axially through all the members to hold the assembly in compression so that the erected constructional unit can resist normal forces applied to the unit longitudinally or transversely at any angle to any face thereof.

The erection of the second constructional unit shown in FIGURE 9 is effected in a similar way to that described for the vertical unit in that figure.

While the polyhedronal elements have been shown as cubes and parallelepipeds or truncated pyramids, they may have any polyhedronal shape, for example hexagonal or pentagonal. Alternatively the polyhedronal elements may be circular about an axis on which the stressing element will ultimately lie and their tops and bottoms may be formed with the profiled surfaces for engagement by the jointing and terminal elements. These profiled faces may if desired be flat, as shown in the drawings, or they may be curved, corrugated or, if other surface shapes are desired, the profiled surfaces of all the elements which are to be connected together may be similar in shape.

As to the stressing elements, these may have the fixing member integral with one end thereof or both ends may be separate members as shown in FIGURE 6.

The tools shown in FIGURES 7 and 8 have shaped sockets **17** for engagement with the heads **13** of the fixing members.

The stressing element may be made as shown in FIGURE 10, with a string **101** of a strong flexible material attached to two fixing members shown as eyebolts **11***a* and the tension obtained by tightening screw threaded headed bolts or nuts (not shown) on the eyebolts **11***a* on the outside faces of the terminal elements.

Another form of stressing element is shown in FIGURES 11A and 11B, the element being a piece **101** of strong flexible strand, e.g., nylon, made into a loop by means of a simple knot. Two short pins indicated at **11***b* with a shallow groove **11***c* in the middle to locate the strand anchor the stressing element to the terminal element. The tension is obtained by turning one of the anchor pins **11***b* round to twist the strands of the loop, as seen in FIGURE 11B. The friction between each anchor pin and the anchor plate will, when the tension in the element **101** is sufficient, prevent the stressing element from unwinding and thus lock it under tension with the remaining elements in compression.

For shorter and smaller structures, or where the joints are automatically under compression it will be convenient to have a method of assembling whereby the elements can be joined one by one with the joining members of resilient material located in tension between each two adjoining elements, but still giving a stable connection able to resist forces on the elements in all directions. The same method can also be used for the larger structures, such as shown in FIGURE 9 with a stressing element such as shown in FIGURES 6, 10 or 11 threaded through the assembled elements, as by passing them through apertures in the joining members, and tensioned to give added stability.

Referring to FIGURE 12 this shows a joining member **161** shaped to fit into the hollow interiors of the polyhedronal elements **2***a* shown as having plate like portions, but the member **161** has protruding edges to grip on the faces **16***a* of the contiguous elements **2***a*. FIGURES 13 and 14 show how the member **161**, due to spring action, can be forced into location to hold the elements **2***a* in compression. FIGURE 15 shows a locking element **18** substantially cubic in form, having a slight taper on two opposite sides.

In assembling the elements described with reference to FIGURES 12–15, when the two elements **2***a* have been disposed close together, the protruding edges **16***b* of the member **16** will slide in over the sides of the faces of the apertures in the elements **2***a* and then spring back to the natural shape to engage the faces **16***a*. The locking element (FIGURE 15) is thereafter pressed into position in the cavity in the member **16**. Friction will prevent the locking element sliding out of the member **16**, and with the former in position, no springing action of the member **161** is possible. The two polyhedronal elements **2***a* cannot be pulled apart nor move relative to each other.

A stressing element such as that of FIGURES 6 or 10 and 11 may be threaded through apertures **17**, **17***a* being provided in the member **16** and element **18** and the assembly of a member **16** and a locking element **18** can be used as terminal element or anchor plate.

Referring to FIGURE 16 this shows a polyhedronal element similar to that shown in FIGURE 1 and is made up of a main polyhedronal element having a rectangular frame piece **20** from the corners of which elongated pieces **21** extend at right angles thereto, and a second and separate rectangular piece **22** provided with apertures **23** into which dowels **24** on the ends of the pieces **21** frictionally engage to form an element similar to that in FIGURE 1. FIGURE 16 also shows a further piece **25** similar to **20**, **21** which by its dowels **24** may be connected to the piece **20** or the piece **22**, in the former case forming an element similar to that shown in FIGURE 2. The polyhedronal elements of FIGURES 3, and other shapes referred to herein, may be made up of pieces in a similar manner to that shown in FIGURE 16. The elements of FIGURE 16 have the advantage of being easily moulded in synthetic plastic materials. They can be assembled with stressing members as described with reference to FIGURES 1 to 15.

The elements may be of any desired size for use as a plaything for example or for such uses as tutorial equipment or for experimental purposes in building construction.

Referring to FIGURES 17, 18 and 19, these show an element similar to that of FIGURE 16 but with several leg-like portions **26** extending away from a frame-like portion **27** and having pins **28** which engage in holes **29** in the frame-like portion **30** to form elongated polyhedronal elements with several apertures in the longitudinal sides. These elements can be made up by making the portion **30** coincident with the portion **26–27** but as seen in FIGURE 19 the portions **30** may be separable and may extend over two separable portions **26** and **27** so that they embrace and reinforce the joint between the two portions **26–27**. The leg portions **26** at one end of the frame portions **27** have extensions **31** on the outer ends of which are sideways directed lugs **32** so shaped that two elements **26–27** can be joined as in FIGURE 19 by sliding the extensions **31**, **32** between the end leg portions **26** so that they enter the hollow interior of the adjacent elements **26–27** and extend round the leg portions **26** thereof to grip the two elements **26–27** together whereafter the portions **30** are fitted on to the pins **28**. By this means additional means are provided co-operating with the stressing element (omitted in FIGS. 17 and 18) to form the structural element. The extensions **31**, **32** can also be used to connect branch structures on to a main longitudinal structure so that much larger structures can be built up of the polyhedronal elements which may be added to by further polyhedronal elements from time to time if desired.

Examples of some further configurations of building elements which can be used in the set are shown in FIGS. 20–29.

FIG. 20 shows a polyhedral element in which tapered sockets **33** are formed in upstanding cylindrical projections **34** on the end face **35** of the element. A cross-section along the line X—X of FIG. 20 looking in the direction of the arrows is provided in FIG. 21, showing more clearly the taper of the sockets and the dowels **36** for engagement in sockets in contiguous elements.

FIG. 22 shows a polyhedral element of frame-like construction having legs **37** with a dowel **36** on the free extremity of each leg, the end face **39** of the element being apertured with curved shouldered projections **38** extending along two opposite faces of the aperture. The element of FIG. 22 can be completed into a six sided frame by a rectangular frame such as **22** in FIG. 16, the dowels **36** engaging in the frame apertures **23** (FIG. 16).

FIG. 23 shows a polyhedral element of general open box-like shape, the outside end face of the element having a dowel **36** near each of its corners. A cross-section of FIG. 23 along the line Y—Y looking in the direction of the arrows is shown in FIG. 24.

FIG. 25 shows a polyhedral element of the same general configuration as that in FIGS. 23 and 24, except that sockets **40** instead of dowels are formed in the corners of the end face **41** of the element.

FIG. 26 shows a generally wedge-shaped element used mainly for disposition between adjacent polyhedral elements when it is desired to form a slightly curved constructional unit. This element is provided on opposite faces with dowels **36** and sockets **40** respectively.

FIG. 27 shows an element for use primarily in retaining the end of a stressing element at the extremity of a built-up unit. This element has an upstanding circular boss **42** for engagement in a recess of a polyhedral element allowing the former to be rotated to tension the stressing element and the corners **43** are cut away to allow the element, after stressing the tensioning element, to be located within a recess, not shown, of the adjacent polyhedral element so that the retaining element is then prevented from rotating.

FIG. 28 shows a further form of element for retaining a stressing element, but having an upstanding rectangular profile **44** on one face for engagement in a recessed face of a polyhedral element to prevent rotation of the retaining element.

FIG. 29 shows a four-sided element having sockets **40** in each of its corners to receive the dowels of an element such as that shown in FIG. 22 for example, whereby a complete polyhedral element is formed.

FIG. 30 shows a number of polyhedral elements interengaged to form part of a constructional unit. The terminal retaining element **45** similar to that in FIG. 27 is shown detached for clarity with the stressing element **46** threaded therethrough and continuing through the centre of the unit. It will be seen that by engaging the dowels **47** of the tool **48** in a pair of sockets **49** or **50** in the element **45**, the latter may be rotated to twist and so tension the stressing element, the other end of which will be anchored at the other end of the unit (not shown).

Most of the elements shown in FIGS. 20–30 are provided with two eccentric pairs of holes **49**, **50** and a central hole **51** in one face, thus enabling a plurality of stressing elements to be passed therethrough. Each of the elements of FIGS. 20–29 may have a similar arrangement of holes as shown. Such an arrangement helps to prevent disengagement of adjacent elements when forces transverse to the longitudinal axis of an assembly of elements are applied to the assembly. Morover by having a number of tensioning elements through holes **49**, **50**, **51** in alignment in the assembled elements, this prevents a tendency in the assembly to curve lengthwise due to the tension and ultimately to collapse. Also the non-central holes provide sockets into which the dowels on the tensioning tool can be engaged to twist the stressing element.

We claim:

1. A set of elements for erection into a constructional unit, said set comprising a number of hollow, polyhedronal elements each having an aperture extending through each face thereof and communicating with the hollow interior, the apertures in said faces being such that each face is frame-like having leg-like portions forming the

sides of the frame, connecting means including connecting elements between such polyhedronal elements and disposable in contact with and fitting into said frame-like face apertures with portions extending into the hollow interior of the polyhedronal element and gripping round the leg-like portions of the frame-like faces to form an assembly of said polyhedronal elements, said connecting elements being flexible for pushing into the apertures, insert means for maintaining said connecting elements rigid when gripping said leg-like portions, said connecting elements and insert means each having a central passage therethrough, and second connecting means including terminal elements rotatably engageable with the end polyhedronal elements of the assembled unit, and at least one stressing element having a twistable portion passing through the hollow polyhedronal elements and said central passages and being non-rotatably fastened to said terminal elements which are rotatable to twist said twistable portion of the stressing element to maintain all the assembled elements under compression thereby forming a constructional unit.

2. A set according to claim 1 wherein each said connecting and polyhedronal element is shaped with the portions within a polyhedronal element not interfering with the similar portion of another connecting element extending through another aperture to the hollow interior of the same polyhedronal element thereby enabling the assembly of elements to be extended freely in all directions through some or all of the aperture faces of each of the polyhedronal elements.

3. A set according to claim 1, wherein each said connecting element is provided with said portions engaging into the apertures and gripping around at least two opposite leg-like portions of a contiguous one of said polyhedronal elements to provide an assembly of elements.

4. A set according to claim 1 wherein at least some of the polyhedronal elements have a framelike side portion

with legs extending from at least some corners of said frame-like side portion, the ends of said legs being formed as pins, corresponding sockets being formed in contiguous elements to receive said pins thereby joining said contiguous elements to form said last mentioned polyhedronal elements of a different shape than the others of said polyhedronal elements.

5. A set according to claim 1 wherein at least some of the polyhedronal elements have a part inluding a frame-like side portion with legs extending from the sides and corners of said side portion, the end of each said legs being formed as a pin, the remaining parts of said last mentioned polyhedronal elements being flat and frame-like and having sockets to receive said pins so that two such parts can be pushed together to form one closed polyhedronal element with framelike sides on all faces and at least one of said faces having extensions with angularly directed lugs to grip around the legs of a contiguous one of said polyhedronal elements when assembling a structural unit.

References Cited

UNITED STATES PATENTS

956,632	5/1910	Finch	46—26
1,958,508	5/1934	Audet	46—25
2,825,178	3/1958	Hawkins	46—26
2,861,388	11/1958	Favaretto	46—16
2,877,506	3/1959	Almoslino	46—26 X
2,885,822	5/1959	Onanian	46—26

FOREIGN PATENTS

184,497	1/1956	Austria.
922,636	1/1955	Germany.
315,405	9/1956	Switzerland.

F. BARRY SHAY, *Primary Examiner.*

RICHARD C. PINKHAM, *Examiner.*