658770

AUSTRALIA

PATENTS ACT 1990

PATENT REQUEST: STANDARD PATENT

We, FERAG AG, being the person identified below as the Applicant, request the grant of a patent to the person identified below as the Nominated Person, for an invention described in the accompanying standard complete specification.

Full application details follow.

Applicant: FERAG AG

Address: Zurichstrasse 74, 8340 Hinwil, Switzerland

Nominated Person: As above

Address: As above

Invention Title: "GRIPPER FOR A CONVEYING DEVICE FOR CONVEYING SINGLE-SHEET OR MULTI-SHEET PRINTING PRODUCTS"

Name of actual inventor: Jurg EBERLE

BASIC CONVENTION APPLICATION DETAILS:

Application Number:	03 694/92-7
Country:	Switzerland
Country Code:	CH
Date of Application:	2nd December, 1992
Basic Applicant:	Ferag AG

Drawing number recommended to accompany the abstract: Figure 3

Address for service is: SHELSTON WATERS
55 Clarence Street
SYDNEY NSW 2000

S 041102 111093

Attorney Code: SW

DATED this 11th Day of October, 1993
FERAG AG

by

Fellow Institute of Patent Attorneys of Australia
of SHELSTON WATERS

To: The Commissioner of Patents
WODEN ACT 2606

File: 17167
Fee: $235.00

A 35 CS AH

CONVENTION - COMPANY - NON-PCT

P/00/008b
Section 29(1)
Regulation 3.1(2)

AUSTRALIA

PATENTS ACT 1990

NOTICE OF ENTITLEMENT

We, FERAG AG, of Zurichstrasse 74, 8340 Hinwil, Switzerland, being the applicant in respect of Application No. 48940/93, state the following:-

1. The person nominated for the grant of the patent has entitlement from the actual inventor as follows:

   If a patent were granted to the actual inventor in respect of the invention the nominated person would be entitled to have the patent assigned to it.

2. The person nominated for the grant of the patent is the applicant of the basic application listed on the patent request form.

3. The basic application listed on the patent request form is the first application made in a Convention country in respect of the invention.

For and on behalf of

FERAG AG

Gerd Rau Jacques Meier ..... 18. November 93

(Signature) (Date)

Name: Gerd Rau Jacques Meier

Title: Director Director

File: 17167

SHELSTON WATERS
55 CLARENCE STREET, SYDNEY, AUSTRALIA

GL25(k)

AU9348940

(12) PATENT ABRIDGMENT (11) Document No. AU-B-48940/93
(19) AUSTRALIAN PATENT OFFICE (10) Acceptance No. 658770

(54) Title
GRIPPER FOR A CONVEYING DEVICE FOR CONVEYING SINGLE-SHEET OR MULTI-SHEET PRINTING PRODUCTS

International Patent Classification(s)
(51)[5] **B65H 005/14** **B65H 029/02**

(21) Application No. : **48940/93** (22) Application Date : **11.10.93**

(30) Priority Data

(31) Number	(32) Date	(33) Country
3694/92	**02.12.92**	**CH SWITZERLAND**

(43) Publication Date : **16.06.94**

(44) Publication Date of Accepted Application : **27.04.95**

(71) Applicant(s)
FERAG AG

(72) Inventor(s)
JURG EBERLE

(74) Attorney or Agent
SHELSTON WATERS , Level 21, 60 Margaret Street, SYDNEY NSW 2000

(56) Prior Art Documents
EP 287143
EP 203553
EP 312755

(57) Claim

1. A gripper for a conveying device for conveying printed products comprising:

a first gripper part having a free end and a second gripper part having a free end, the first gripper part being pivotable relative to the second gripper part, the first gripper part having a clamping position for securely clamping a printed product, and the first gripper part in the clamping position interacting under spring action on its free end with the free end of the second gripper part;

a bearing part being pivotable about a first pivot axis from an open position to a closed position, the first gripper part being mounted pivotably about a second pivot axis, which runs essentially parallel to the first pivot axis, a pivot bearing for the first gripper part, the pivot bearing being offset with respect to the first pivot axis;

.../2

a locking mechanism, releasable by a fixed-in-place opening arrangement, holding the bearing part in its closed position; and

a transfer element connected to transfer the pivoting movement of the bearing part to the first gripper part and generate a spring-elastic clamping force, acting via the first gripper part on the free end thereof, when the bearing part is in the closed position.

658770

AUSTRALIA

PATENTS ACT 1990

C O M P L E T E S P E C I F I C A T I O N

FOR A STANDARD PATENT

O R I G I N A L

Name of Applicant: FERAG AG

Actual Inventor: Jurg EBERLE

Address for Service: SHELSTON WATERS
55 Clarence Street
SYDNEY NSW 2000

Invention Title: "GRIPPER FOR A CONVEYING DEVICE FOR CONVEYING SINGLE-SHEET OR MULTI-SHEET PRINTING PRODUCTS"

The following statement is a full description of this invention, including the best method of performing it known to us:-

Gripper for a conveying device for conveying single-sheet or multi-sheet printing products

The present invention relates to a gripper for a conveying device for conveying single-sheet or multi-sheet printing products, such as newspapers, periodicals and parts thereof as well as supplements therefor.

Known grippers of this type are described in DE-A-31 02 242 (and the corresponding US-A-4,381,056).

It is therefore an object of the invention to provide a gripper for a conveying device which substantially ameliorates the disadvantages of the prior art.

In accordance with one aspect of the present invention there is provided a gripper for a conveying device for conveying printed products comprising:

a first gripper part having a free end and a second gripper part having a free end, the first gripper part being pivotable relative to the second gripper part, the first gripper part having a clamping position for securely clamping a printed product, and the first gripper part in the clamping position interacting under spring action on its free end with the free end of the second gripper part;

a bearing part being pivotable about a first pivot axis from an open position to a closed position, the first gripper part being mounted pivotably about a second pivot axis, which runs essentially parallel to the first pivot axis, a pivot bearing for the first gripper part, the pivot bearing being offset with respect to the first pivot axis;

a locking mechanism, releasable by a fixed-in-place opening arrangement, holding the bearing part in its closed position; and

a transfer element connected to transfer the pivoting movement of the bearing part to the first

AUSTRALIAN PATENT OFFICE LS

gripper part and generate a spring-elastic clamping force, acting via the first gripper part on the free end thereof, when the bearing part is in the closed position.

Preferred further developments of the gripper according to the invention are outlined in the dependent claims.

Exemplary embodiments of the subject-matter of the invention are explained in more detail below with reference to the drawings, in which:

Fig. 1 shows in side view a gripper in the closed state;

Fig. 2 shows the gripper according to Fig. 1 in front view in the direction of the arrow A in Figure 1 and partially in section;

Fig. 3 shows in section along the line III-III in Figure 2 a gripper at the beginning of clamping a printing product;

Fig. 4 shows in a representation corresponding to Figure 3 the gripper at the end of the clamping operation, i.e. in the closed position;

Fig. 5 shows in diagrammatic representation the functional principle of the gripper shown in Figures 1 and 2; and

Fig. 6 shows in a representation corresponding to Figure 1 a different embodiment of a gripper according to the invention in a different pivoted position than that represented in Figure 1.

The grippers 10 represented in the figures have a first gripper part 11, the leg of which is denoted by 12, and a second gripper part 13, the leg of which is denoted by 14. In the opened state of the grippers 10,

AUSTRALIAN PATENT OFFICE LS

the two gripper parts 11 and 13 define a gripper opening 15. The first gripper part 11 is pivotable, in a way still to be described, with respect to the second gripper part 13 and is shown in Figures 1 and 2 in its closed position, in which its free end 12a interacts with the free end 14a of the second gripper part 13 for securely clamping a printing product (not shown in Figures 1 and 2).

The second gripper part 13 is designed in one piece with a carrying part 16, which is mounted pivotably on a hollow shaft 17, the longitudinal axis of which is denoted by 17'. The shaft 17 which is provided with longitudinal grooves, as can be seen from the figures, is mounted rotatably in a cross-sectionally U-shaped securing means 18, which is fastened on a link chain 19, which is guided in a guide channel 20 (see Figure 2). On this endlessly designed link chain 19, which is of a known type, there are fastened at regular intervals a multiplicity of grippers 10, which belong in a known way to a conveying device for conveying printing products, such as is shown and described, for example, in EP-A-0 330 868 (and the corresponding US-A-4,953,847).

The conveying direction of this conveying device is drawn-in in Figure 1 by an arrow denoted by F. As this Figure 1 reveals, the gripper opening 15 points rearwards with respect to this conveying direction F.

To the shaft 17 there is further connected, in a rotationally fixed manner, a bearing part 21 for the first gripper part 11. The latter is mounted pivotably and tiltably in this bearing part 21 by means of a ball joint 22 in a way still to be described. The ball joint 22 has a socket part 23, which is formed in the bearing part 21 and in which there is held a ball part 24, which is formed at the end of the leg 12 of the first gripper part 11. The ball joint 22 is designed in the manner of a snap connection, i.e. the first gripper part 11 can be pressed by its ball part 24 into the socket part 23 in a simple manner during assembly of the gripper 10. Due to the design mentioned of the bearing for the first gripper

part 11 as ball joint 22, the first gripper part 11 can, on the one hand, be pivoted about an axis 25, which runs essentially parallel to the longitudinal axis 17′ of the hollow shaft 17. Upon a pivoting of the first gripper part 11 about this pivot axis 25, the first gripper part 11 is pivoted away from the second gripper part 13 or towards the latter. On the other hand, the spherical mounting of the first gripper part 11 also allows a tilting of the first gripper part 11 about a tilt axis 26, which is formed by the longitudinal axis running from the ball joint 22 to the free end 12a of the first gripper part 11, as Figure 2 reveals. This possibility of tilting the first gripper part 11 about this tilt axis 26 allows a satisfactory secure holding even of printing products which are of different thicknesses over the width of the gripper 10. In order to prevent undesired and uncontrolled movements of the spherically mounted first gripper part 11, the latter is arranged between two guide walls 21a, 21b (Fig. 2) formed on the bearing part 21.

As can be readily seen from the figures, the ball joint 22 is offset rearwards, seen from the free end 12a of the first gripper part 11, with respect to the longitudinal axis 17′ of the hollow shaft 17 and consequently the pivot axis of the bearing part 21. Expressed another way, the movable gripper part 11 is mounted outside the actual gripper axis, which is formed by the longitudinal axis 17′ of the hollow shaft 17, which also forms the pivot axis for the second gripper part 13 and consequently of the complete gripper 10. Insofar as the advantages of this arrangement do not already emerge from the previous explanations, we shall return again to them in conjunction with Figure 5.

On the bearing part 21 for the first gripper part 11 there is supported a compression spring 27, which is supported at the other end on the leg 12 of the first gripper part 11 and brings this gripper part 11 to bear against the bottom 21c of the bearing part 21 (Figure 3). As can be readily seen from Figures 1, 3 and 4, a

rotating movement of the shaft 17, and consequently also of the bearing part 21, in the anticlockwise direction is transferred via this compression spring 27 to the first gripper part 11, which has the consequence of a pivoting of the latter out of an open position, not shown in the figures, into the clamping position, which is represented in Figure 4.

To the shaft 17 there is connected in a rotationally fixed manner a closing lever 28, the pivot axis of which coincides with the longitudinal axis 17' of the hollow shaft 17. At its free end, the closing lever 28 bears a follow-up roller 29, which is freely rotatable. For pivoting the hollow shaft 17 and consequently the bearing part 21, this follow-up roller 29 interacts with fixed-in-place closing links 30, of which one closing link is shown in Figures 1, 2 and 3.

For blocking the bearing part 21 in its closed position, there is a locking mechanism, which has a locking lever 31 which is mounted pivotally on the carrying part 16. This locking lever 31 has at its one end a detent 32, which for locking the bearing part 21 interacts with a blocking member 33, which is connected at the one end of the hollow shaft 17 in a rotationally fixed manner to the latter. This blocking member 33 is fully visible in Figure 1 and represented partially cut-away in Figure 2. The locking lever 31 is held in its blocking position by means of a spring, not shown. The end 31a, lying opposite the detent 32, of the two-armed locking lever 31 is intended to interact with opening links, not shown in the figures, which effect a pivoting of the locking lever 31 out of the blocking position into a release position.

Arranged on the carrying part 16 for the second gripper part 13, on the same side as the locking lever 31, is a positioning follow-up roller 34, which is mounted freely rotatably. This positioning follow-up roller 34 interacts with positioning links 35, by which the pivoted position of the second gripper part 13 and consequently of the open and closed gripper 10 is

defined. It goes without saying that the positioning links 35 have to be designed in a way corresponding to the respectively desired pivoted position of the grippers 10.

A control cam 36 is provided on the carrying part 16 for the second gripper part 13, on the side opposite the positioning follow-up roller 34. By interaction of this control cam 36 with control links, of which one link 37 is represented in Fig. 2, the carrying part 16 and consequently the second gripper part 13 are pivoted into a position favourable for the interaction of positioning follow-up roller 34 and fixed-in-place positioning link 35. This means that the grippers 10 can assume any desired pivoted position outside the range of product take-over and surrender and that then, by means of this control cam 36 and the associated link 37, a prepositioning of the gripper 10 takes place before the positioning follow-up roller 34 arrives in the region of the positioning link 35.

The operating principle of a gripper 10 is now explained below with reference to Figures 1-4.

In the open position, not represented in the figures, of the gripper 10, i.e. with bearing part 21 in the open position, the compression spring 27 is already under tension. Before the closing of the gripper 10, the latter, i.e. the second gripper part 13, is prepositioned, if appropriate by the control cam 36 and the link 37 interacting with the latter, and then brought by the positioning link 35, acting on the positioning follow-up roller 34, into the desired product-receiving position, which is represented in Figures 3 and 4, and held in this position. For pivoting the bearing part 21 from the open position into the closed position, the closing link 30 begins to act on the follow-up roller 29 of the closing lever 28, which as a result is pivoted anticlockwise. This has as a consequence a corresponding rotation of the hollow shaft 17 and consequently also of the bearing part 21. The rotating position of the bearing part 21 is transferred via the compression spring 27 to

the leg 12 of the first gripper part 11, without the compression spring 27 first of all being further tensioned thereby. As a result, the first gripper part 11 is pivoted in the direction towards the second gripper part 13 and consequently towards the clamping position. Once the closing lever 28 has reached its position represented in Figure 3, the free end 12a of the first gripper part 11 comes into contact with the product P to be securely clamped, which rests with the underlying side on the leg 14 of the second gripper part 13. In this position, the compression spring 27 already exerts a certain clamping force. As can be seen from Figure 3, the blocking member 33 now also already begins to run onto the detent 32 of the locking lever 31. Upon further turning of the closing lever 28, the locking lever 31 is then pushed back out of its blocking position by the blocking member 33, continuing to act on the detent 32, i.e. it is pivoted anticlockwise. Once the closing lever 28 has then reached its end position, predetermined by the closing link 30, a locking of the closing lever 28 and of the bearing part 21 in its closed position is performed by the detent 32, acting on the blocking member 33, of the locking lever 31 (Fig. 4). During the pivoting of the closing lever 28 from the position shown in Figure 3 into the position according to Figure 4, the compression spring 27 is compressed, which has the consequence that the clamping force which is exerted by the first gripper part 11 is correspondingly increased. The size of this clamping force depends not only on the force of the compression spring 27 already acting on the gripper part 11 in the open position of the gripper 10 (pretensioning force), but also on the thickness of the printing product P securely clamped between the gripper parts 11, 13.

The closing operation described above is now explained in even further detail with reference to Figure 5, in which the individual parts of a gripper 10 are represented only diagrammatically.

During the pivoting of the bearing part 21 and consequently also of the first gripper part 11 into the

intermediate position shown in Figure 3, the end 12a of the first gripper part 11 moves along a circular arc K_1 as far as the position denoted in Figure 5 by 1. The centre of the circular arc K_1 lies on the longitudinal axis 17' of the hollow shaft 17 (which is of course also the pivot axis of the bearing part 21). The radius of the circular arc K_1 is denoted by R_1. The first gripper part 11, located in this intermediate position, is indicated by dot-dashed lines, the ball joint 22 assuming the position denoted by 1. Upon further turning of the bearing part 21, which as already explained has as a consequence a compressing of the compression spring 27, a relative movement occurs between the bearing part 21 and the first gripper part 11. The ball joint 22' is moved into the position denoted in Figure 5 by 2, while the free end 12a, resting on the printing product P, of the first gripper part 11 is first of all displaced by the distance b rearwards into the position likewise denoted by 2. By this displacement of the free end 12a of the first gripper part 11, there is exerted on the printing product P a drawing effect, which tends to push the printing product even further into the gripper 10. Subsequently, upon further pivoting of the first gripper part 11, the free end 12a of the first gripper part is moved along a circular arc K_2, the centre of which lies on the pivot axis 25, determined by the ball joint 22', and the radius of which is denoted by R_2.

As mentioned, the end 12a of the first gripper part 11 moves along the circular arc K_1 until this end 12a meets a printing product. In the case of thin printing products, this means that the gripper part end 12a runs along this circular arc K_1 until almost up to the point denoted by 2, i.e almost up to the end 14a of the other gripper part 13. The abovementioned rearward movement of the end 12a of the gripper part 11 is accordingly extremely small, or virtually non-existent, in the case of thin products.

In Figure 5, the useful width of the gripper opening 15 for the gripping of printing products of

differing thickness is denoted by c.

As can be further seen from Figure 5, the ball joint 22 or the pivot axis 25, defined by the latter, of the first clamping part 11 is offset rearwards, i.e. in a direction away from the free end 12a of the first gripper part 11, by the distance a with respect to the pivot axis 17' of the bearing part 21. In this way, a lengthening of the leg 12 of the first gripper part 11 in the direction away from the line of application 38 (Fig. 5) of the compression spring 27 is obtained. This means that, with a given compression spring 27, greater clamping forces are attained at the free end 12a of the first gripper part 11 than in the case of a solution in which the pivot axis of the first gripper part 11 coincides with the pivot axis 17' of the bearing part 21. Thus, the part of the leg 12 of the first gripper part 11 lying between the line of force application 38 of the compression spring 27 and the free end 12a does not have to be lengthened in order to increase these clamping forces, which permits a compact design with gripper legs 12, 14 which are as short as possible.

The separating of the one pivot axis 25 for the first gripper part 11 from the other pivot axis 17' for the bearing part 21 has the effect of gaining more freedom in the design of the pivot bearing 22 of the first gripper part 11. Thus, as already mentioned, this pivot bearing may be designed as ball joint 22, which as explained permits a certain tilting of the first gripper part 11 about its longitudinal axis 26 (see Fig 2). Consequently, the first gripper part 11 can adapt itself in its position to a printing product P, even if the latter is of differing thickness over its width. This means that is the area of the free end 12a of the first gripper part 11 an essentially equally strong clamping of the printing product P takes place over its entire width d (Fig. 2), even if said product is of unequal thickness. Consequently, a satisfactory secure clamping of the printing products is ensured.

For opening the grippers 10 and consequently for

releasing the seized pristing products P, an unlocking force is exerted on the end 31a of the locking lever 31 by means of opening links, not represented in the figures, which unlocking force has as a consequence a pivoting of this locking lever 31 anticlockwise. The blocking member 33 can then detach itself from the detent 32, with the result that the bearing part 21 and consequently also the hollow shaft 17 can pivot under the action of the then relaxing compression spring 27.

In Figure 6 there is shown a gripper 10, which corresponds in design to the gripper shown in Figures 1-4 but is pivoted into a position in which the gripper opening 15 runs ahead, seen in movement direction F of the gripper 10. It is evident from the representations of Figures 1 and 6 how large the useful pivoting range is, i.e. in which different positions the gripper 10 can seize or surrender printing products.

It should also be noted with respect to Figure 6 that, on the second gripper part 13 there is provided in the region of its free end 14a a clamping member 39 which faces the other gripper part 11 and serves for securely clamping a printing product P'. The clamping member 39 has a clamping face 39a which, with gripper 10 closed, lies opposite the end 12a of the gripper part 11 and runs approximately parallel with respect to the latter. The printing product P' is held securely between the clamping face 39a of the clamping member 39 and the free end 12a of the first gripper part 11 in a certain, defined position.

Some of the different possible variants are now dealt with in more detail below.

As already mentioned, the offsetting of the pivot axis 25 of the first gripper part 11 with respect to the pivot axis 17' of the bearing part 21 creates freedoms in the design of the pivot bearing for this first gripper part 11. Due to the design described of this pivot bearing as ball joint 22, the possibility is created, as explained, that the first gripper part 11 can execute a certain tilting movement about its longitudinal axis 26.

The pivot bearing can, however, also be designed differently, in order to make it possible for the first gripper part 11 to carry out not only a pivoting movement about an axis 25 running essentially parallel to the pivot axis 17' of the bearing part 21 but also a tilting movement about the longitudinal axis 26 of the first gripper part 11, which axis runs essentially from the pivot bearing 22 to the free end 12a of the first gripper part 11.

In the case of the embodiment shown in the figures, in which a compression spring 27 is arranged between the bearing part 21 and the first gripper part 11, the gripper parts 11 and 13 may be produced from plastic. In this case, it is not necessary for the legs 12, 14 of the gripper parts 11, 13 to be flexurally very elastic. It is also possible, however, to design at least the leg 12 of the first gripper part 11 as a bending spring and to arrange on the bearing part 21 instead of the compression spring 27 an essentially unelastic transfer element which acts approximately in the direction of the line of force application 38 (Fig. 5) on the leg 12 of the first gripper part 11 and first of all takes the latter along and then deflects at the end of the closing operation described with reference to Figures 3 and 4, in order in this way to generate the desired clamping force at the free end of the first gripper part 11.

THE CLAIMS DEFINING THE INVENTION ARE AS FOLLOWS:-

1. A gripper for a conveying device for conveying printed products comprising:

a first gripper part having a free end and a second gripper part having a free end, the first gripper part being pivotable relative to the second gripper part, the first gripper part having a clamping position for securely clamping a printed product, and the first gripper part in the clamping position interacting under spring action on its free end with the free end of the second gripper part;

a bearing part being pivotable about a first pivot axis from an open position to a closed position, the first gripper part being mounted pivotably about a second pivot axis, which runs essentially parallel to the first pivot axis, a pivot bearing for the first gripper part, the pivot bearing being offset with respect to the first pivot axis;

a locking mechanism, releasable by a fixed-in-place opening arrangement, holding the bearing part in its closed position; and

a transfer element connected to transfer the pivoting movement of the bearing part to the first gripper part and generate a spring-elastic clamping force, acting via the first gripper part on the free end thereof, when the bearing part is in the closed position.

2. The gripper according to claim 1 wherein the pivot bearing for the first gripper part is disposed at a distance from the pivot axis of the bearing part in a direction away from the free end of said first gripper part.

3. The gripper according to claim 1 wherein the pivot bearing for the first gripper part is configured such that the first gripper part is tiltable about its longitudinal axis, the longitudinal axis running from the pivot bearing to the free end of the first gripper part.

AUSTRALIAN PATENT OFFICE LS

4. The gripper according to claim 1 wherein the pivot bearing comprises a ball joint.

5. The gripper according to claim 4 wherein the ball joint comprises a socket part and a ball part connected as a snap connection.

6. The gripper according to claim 1 wherein the transfer element comprises a spring element arranged between the bearing part and the first gripper part such that the transfer element can be tensioned into the closed position upon pivoting of the bearing part and exerts a clamping force on the first gripper part with bearing part blocked in its closed position.

7. The gripper according to claim 1 wherein the leg of the first gripper part comprises a bending spring and the transfer element is arranged between the bearing part and the first gripper part, and acts on the leg, such that with the bearing part blocked in its closed position, the bearing part tensions said bending spring to generate a clamping force.

8. The gripper according to claim 6 wherein the spring element acts between the first pivot axis and the free end of the first gripper part.

9. The gripper according to claim 7 wherein the transfer element acts between the first pivot axis and the free end of the first gripper part.

10. The gripper according to claim 1 wherein the bearing part is connected to a pivotably mounted closing lever, for interacting with fixed-in-place closing links to pivot the bearing part into the closed position.

11. The gripper according to claim 10 comprising a rotatably mounted shaft, to which both the closing lever and the bearing part are connected in a rotationally fixed manner and on which the second gripper part is mounted.

12. The gripper according to claim 6 wherein the spring element comprises a compression spring and the bearing part comprises a support for the one end of the

AUSTRALIAN PATENT OFFICE

compression spring such that the compression spring acts with its other end on the first gripper part.

13. The gripper according to claim 11 comprising a positioning follow-up element which is coupled to the second gripper part and interacts with a fixed-in-place positioning link to hold the second gripper part in a certain pivoted position.

14. The gripper according to claim 11 wherein the locking mechanism includes a pivotably mounted locking lever which acts on a blocking part of the shaft to block the bearing part in the closed position and which can be pivoted into a release position by the opening arrangement.

15. The gripper according to claim 1 wherein the second gripper part is mounted pivotably about the first pivot axis.

16. The gripper according to claim 1 wherein the second gripper part comprises a clamping member at its free end, the clamping member facing the first gripper part, between which clamping member and the free end of the first gripper part the printed products can be securely clamped.

17. A gripper according to any one of the preceding claims including a gripper securing member for securing the gripper to an endless conveying element in said conveying device, said shaft being mounted on said securing member for pivotal movement relative to said securing member.

18. A gripper for a conveying device substantially as herein described with reference to the accompanying figures.

DATED this 31st day of January, 1995

FERAG AG

Attorney: CAROLINE M. BOMMER

Fellow Institute of Patent Attorneys of Australia

of SHELSTON WATERS

Abstract

The gripper (10) has two gripper parts (11, 13), of which the one, first gripper part (11) is pivotable relative to the other, second gripper part (13). For securely holding a printing product (P), the free ends (12a, 14a) of the two gripper parts (11, 13) interact. The first gripper part (11) is mounted by means of a ball joint (22) in a bearing part (21), which is seated unrotatably on a rotatably mounted hollow shaft (17). Between the bearing part (21) and the first gripper part (11), spherically mounted in the latter, there is arranged a compression spring (27), which in the closed position of the bearing part (21) exerts a compressive force on the first gripper part (11). The ball joint (22) is offset rearwards with respect to the pivot axis (17') of the bearing part (21). As a result, a lengthening of the leg (12) of the first gripper part (11) rearwards is attained, which results in more favourable leverages and, with a given compression spring (27), accordingly results in higher clamping forces at the free end (12a) of the first gripper part (11).

(Fig. 3)

11 10 93 48940

Fig.1

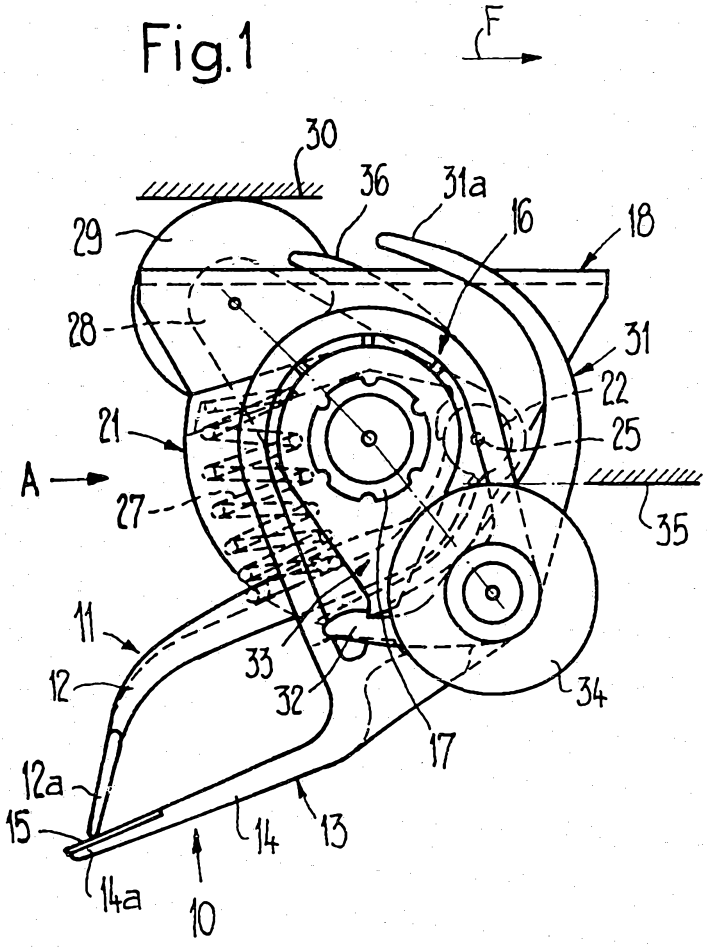

Fig.2

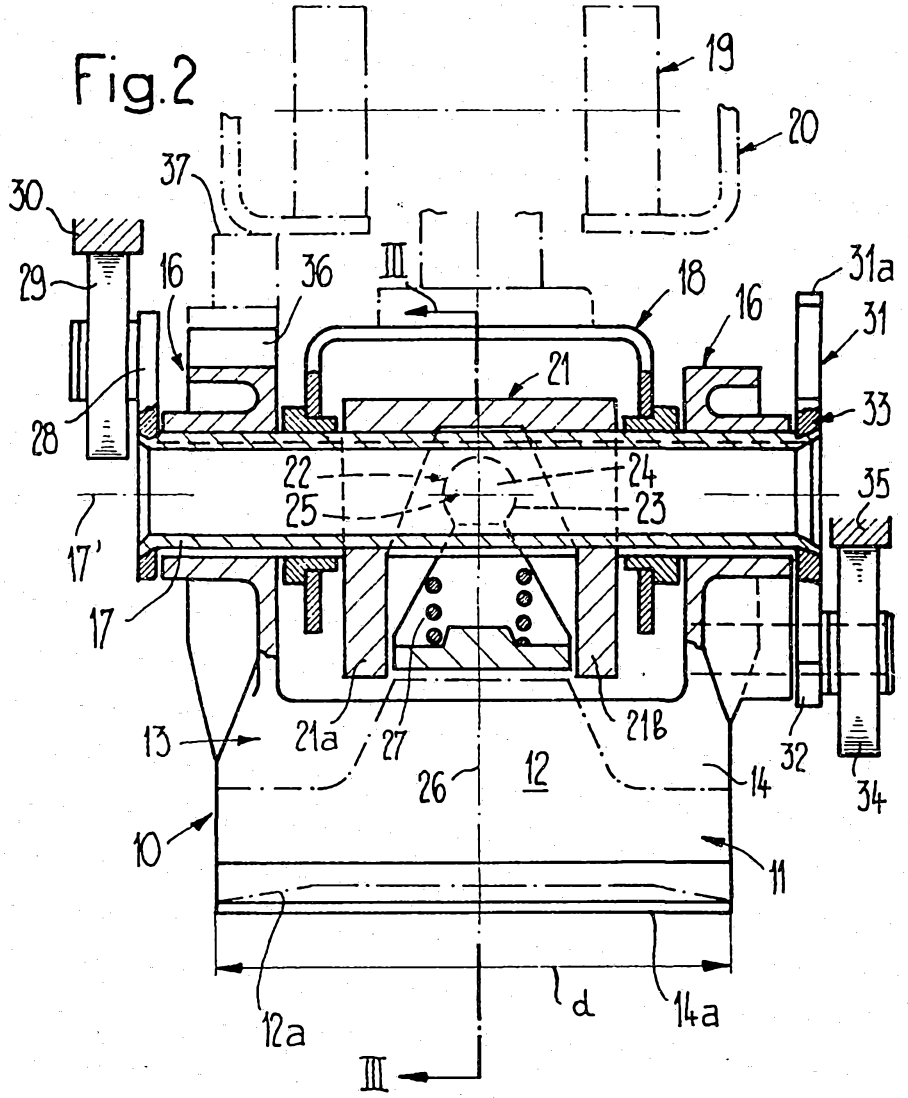

11 10 93 04940

Fig.3

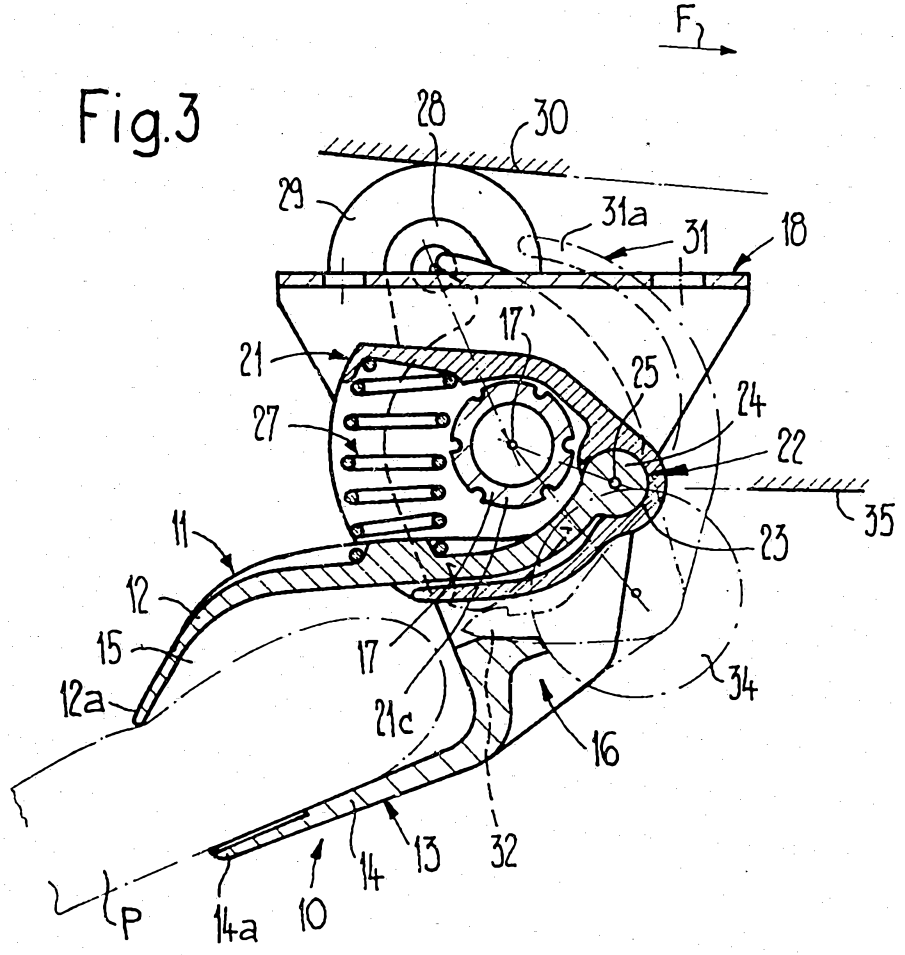

Fig.4

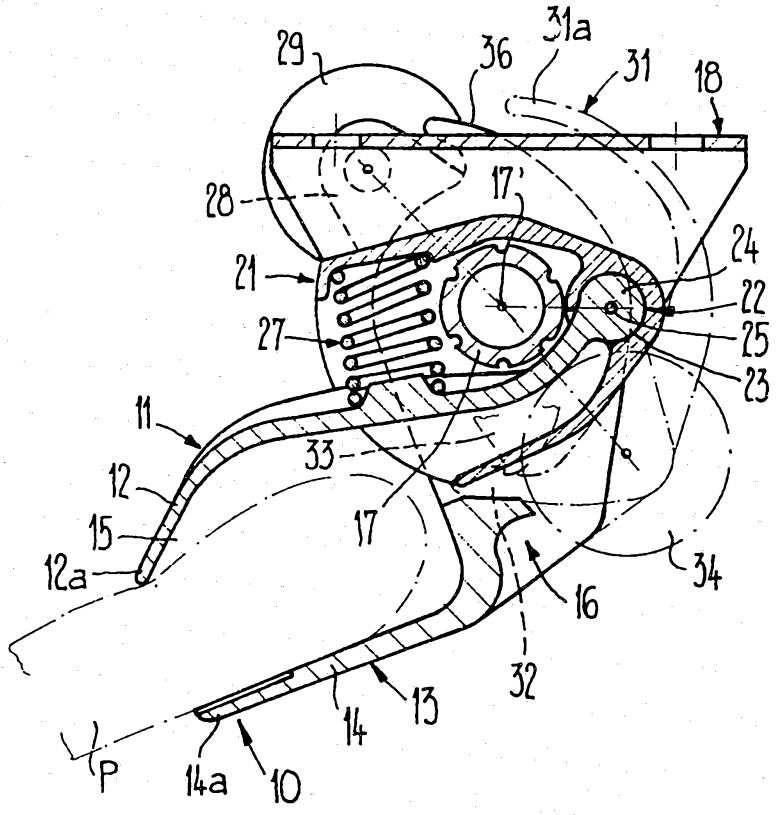

94/04940/93

Fig.5

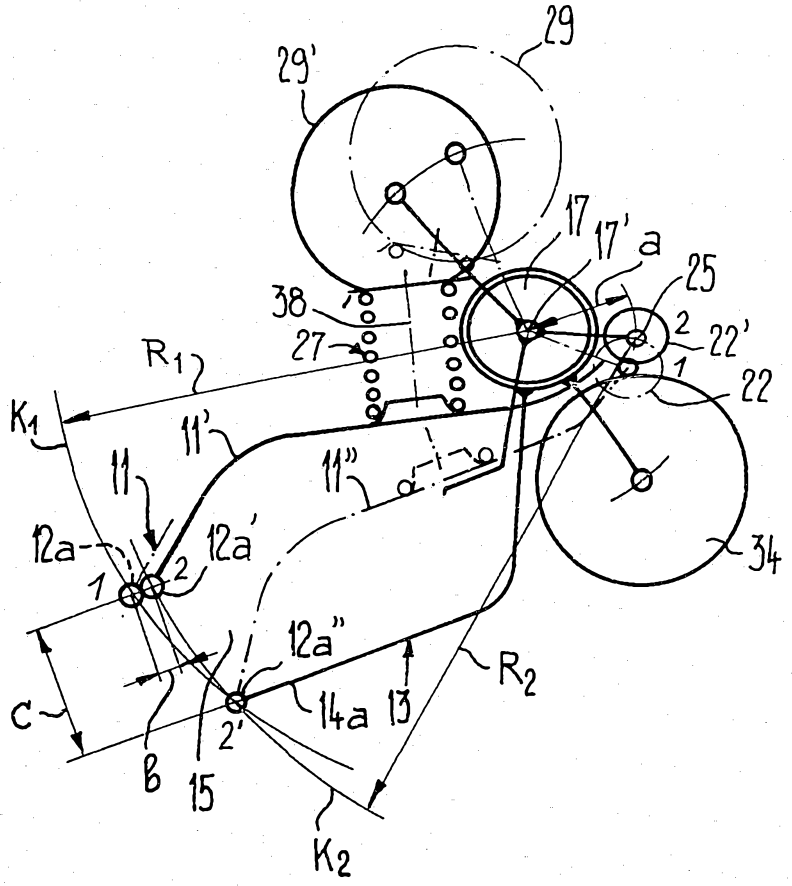
29
29'
17
17'
a
25
38
27
2
22'
1
22
R1
K1
11'
11"
11
12a
12a'
1
2
34
12a"
C
14a
13
R2
B
15
2'
K2

Fig.6

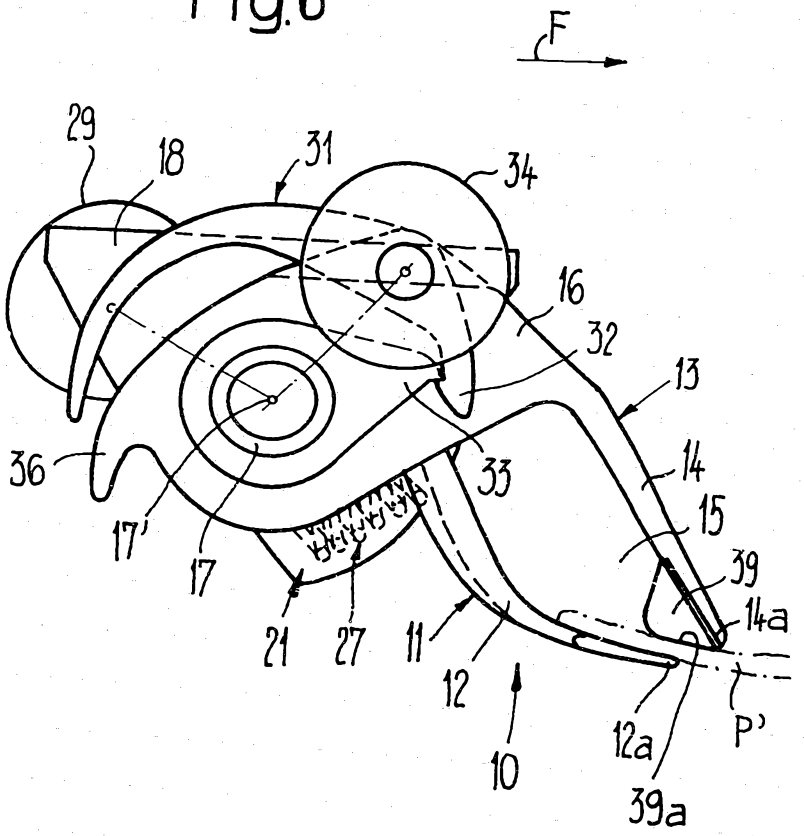
F
29
18
31
34
16
32
13
36
33
14
15
17'
17
39
14a
21
27
11
12
10
12a
P'
39a