May 26, 1925. 1,539,465

P. I. CHANDEYSSON

FIELD REGULATOR

Filed May 25, 1922

Fig. 6

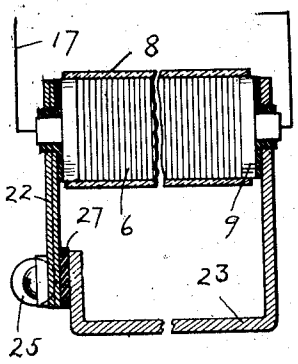

Fig. 2.

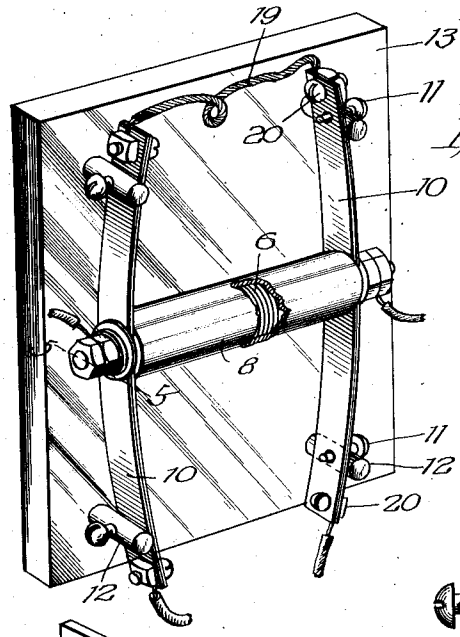

Fig. 3

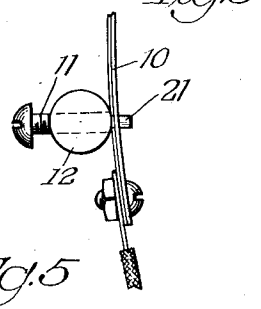

Fig. 4

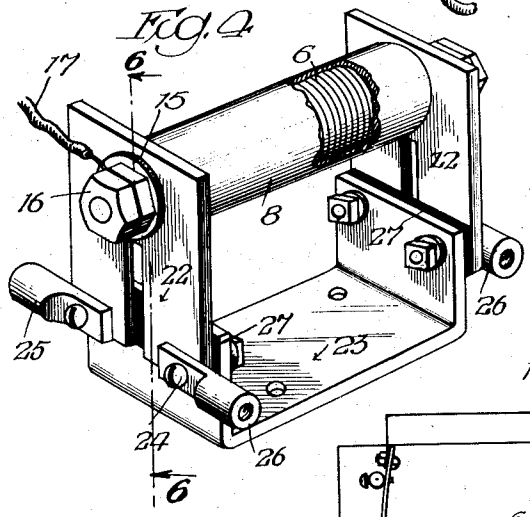

Fig. 5

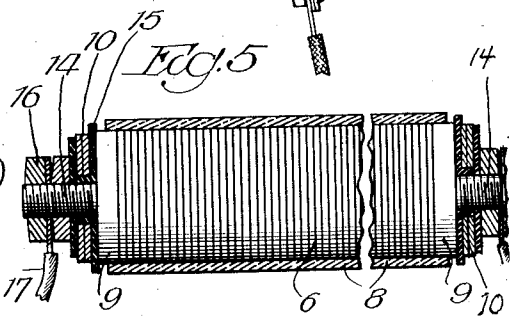

Fig. 1

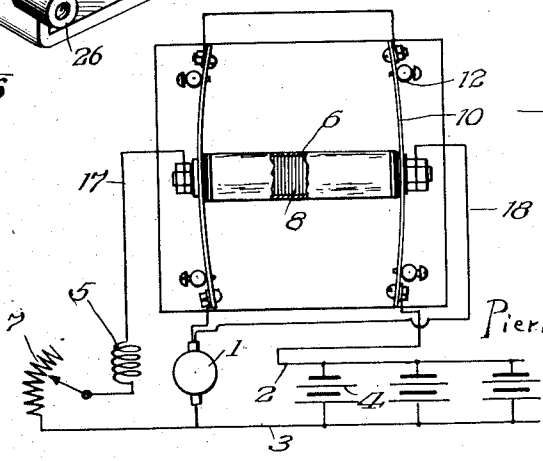

Inventor:
Pierre I. Chandeysson
by Albert J. Scheible,
Attorney

Patented May 26, 1925. 1,539,465

UNITED STATES PATENT OFFICE.

PIERRE I. CHANDEYSSON, OF ST. LOUIS, MISSOURI, ASSIGNOR TO MARSHALL ELECTRIC COMPANY, OF CHICAGO, ILLINOIS, A CORPORATION OF ILLINOIS.

FIELD REGULATOR.

Application filed May 25, 1922. Serial No. 563,531.

To all whom it may concern:

Be it known that I, PIERRE I. CHANDEYSSON, citizen of the United States, residing at St. Louis, in the county of St. Louis and State of Missouri, have invented certain new and useful Improvements in a Field Regulator; and I do hereby declare the following to be a full, clear, and exact description of the invention, such as will enable others skilled in the art to which it appertains to make and use the same.

My invention relates to the automatic regulation of electric generators, and to automatically controlled resistances particularly adapted for use in such a connection and also suitable for employment wherever a resistance is to be automatically responsive to an available electrical current.

In the first of these general aspects, my invention aims to provide simple and effective means which can readily be connected to an ordinary shunt-wound generator and by means of which the current flowing through the shunt field winding of the generator will automatically be varied in response to variations in the wattage of the generated current. Furthermore, my invention aims to provide means for this purpose which will not involve any sudden or jerky step-by-step action, but which will afford a continuously graduated adjustment. It also aims to provide an arrangement which can easily be varied in the extent of its effectiveness so that when it is connected to an ordinary shunt-wound generator, the simple shunt winding can be made to act as the equivalent for a flat-compound winding, an overcompound winding, an under-compound winding, or a winding corresponding to any other desired curve of voltage as plotted in relation to the current output of the generator. In an immediate commercial application of this aspect, my invention aims to provide a simple, inexpensive and entirely automatic controller or regulator which can readily be connected to the circuits of an ordinary shunt-wound generator so as to increase the ampere turns in the field winding with an increased load on the generator for the purpose of securing a constant voltage through the normal range of output of the generator.

In another broad aspect, my invention aims to provide an adjustable resistance in which the variations of effective resistance can readily be produced without any jerky action (such as is inevitable by any step-by-step arrangement), in which the range of resistance can readily be varied, and in which the variations in the resistance will be automatically responsive to variations in the strength of a given current. In this aspect, my invention aims to provide a rheostat in which the effective resistance is controlled by the compressing of suitable resistance elements, such as carbon disks; aims to provide a construction which will readily permit another set of carbon disks to be substituted so as to afford a different range of resistance, aims to provide thermostatic bars arranged for producing the desired pressure variations in response to variations in the flow of current through such bars, aims to arrange a pair of such bars so that they will cooperate in producing the desired pressure effect, and aims to provide exceedingly simple and inexpensive mountings for the various parts. It also aims to provide an automatically controlled rheostat of this general class which can readily be shipped as an entirety and which can easily be connected to any two circuits, namely the circuit into which the resistance is to be inserted and the circuit which is to control the said resistance.

Still further and also more detailed objects will appear from the following specification and from the accompanying drawings, in which—

Fig. 1 is a diagrammatic view showing an automatically controlled rheostat embodying my invention and connected to a shunt-wound battery charging generator in accordance with my invention for automatically regulating the voltage of the generator.

Fig. 2 is an enlarged perspective view of the thermostatically regulated rheostat which forms a part of Fig. 1.

Fig. 3 is an enlarged elevation showing an end of one of the thermostatic bars and the thrust-receiving post adjacent thereto.

Fig. 4 is a perspective view of another form of automatic regulating rheostat embodying my invention, namely one in which each of the two thermostatic bars is doubled upon itself edgewise in substantially U shaped formation and in which a single U-shaped support is provided for both of these bars.

Fig. 5 is an enlarged section taken centrally and horizontally through the compressible resistance of Fig. 4, or along the line 5—5 of Fig. 2.

Fig. 6 is a section taken through Fig. 4 along the line 6—6 of that figure.

Referring first to the diagram of Fig. 1, this shows a generator 1 connected by circuit wires 2 and 3 to a series of batteries 4 which are to be charged by the generator. The field winding 5 of the generator is connected in shunt with the generator terminals and in series with an automatically controlled resistance 6 as hereafter more fully described; and in this case is also shown as in series with a manually controlled resistance 7 whereby the operator may initially adjust the current in the field coil according to the speed at which the generator is driven, so as to predetermine the generated voltage.

To maintain this voltage constant I construct the resistance 6 of carbon disks assembled within an insulating tube 8 and adapted to be compressed more or less by means responsive in action to the strength of the generated current. For that purpose, I desirably support the tube 8 jointly by a pair of metal presser heads 9 which heads are continuously urged towards each other by opposed thermostatic bars 10 associated respectively with the said heads 9. In the embodiments of Figs. 1 and 2, the thermostatic bars 10 as employed for that purpose extend substantially parallel to each other and are bowed towards each other, each of the bars being supported by a pair of screws 11 threaded through posts 12 and extending through elongated openings respectively near the opposite ends of the bar, the posts 12 all being mounted on an insulating base 13. Each of the presser heads 9 is formed on the head of a bolt having a shank 14 extending through the adjacent thermostatic bar 10 but insulated from the latter by a suitable insulating spool 15 after the manner shown in Fig. 5, and the shank 14 has a pair of nuts 16 threaded upon it and adapted to clamp the tip of a wire 17 between the same. The wires 17 and 18 as respectively connected to the presser heads at opposite ends of the resistance tube are respectively connected to one terminal of the generator 1 and to the adjacent end of the field coil 5 after the manner shown in Fig. 1, so that the carbon disks 6 are effectively interposed in series with the shunt winding.

To actuate the thermostatic bars, these are here shown as both connected in series with one of the generator circuit wires, namely the wire 2, and are here shown as connected to each other at their upper ends for this purpose by a jumper wire 19, both of the thermostatic bars having their constituent portions so arranged that an increase in temperature will tend to straighten them and hence will tend to compress the resistance disks interposed between them.

Since these bars are both in circuit with a supply wire of the generator, the heating effect to which they are subjected will depend on the generated current. Consequently, any increase in this current will tend to straighten out the thermostatic bars and in doing so will compress the resistance disks 6, thereby increasing the amount of current flowing through the shunt winding of the generator. On the other hand, a decrease in the amount of generated current will permit the normal resiliency of the thermostatic bars to increase the convexity of the latter, thereby relaxing the compression of the resistance and hence decreasing the current flowing through the shunt winding. By suitably proportioning the resistance, I can therefore cause my simple arrangement to act as an entirely automatic means for regulating the generated voltage according to any desired voltage curve. That is to say, I can readily obtain the equivalent of any type of compounding effect without requiring an additional winding on the generator, and I can secure this by the mere connection to an ordinary generator of a regulating appliance which can readily be shipped in self-contained form and which can be attached by anyone capable of making the simplest of wire connections.

To insure good electrical connections between the wires and the thermostatic bars, I desirably provide terminal bolts 20 at each end of each thermostatic bar so that the electrical connections can be made without depending on any rubbing contact, such as that between the bars and the posts or thrust members 12. By providing each of the screws 11 with a reduced tip 21 projecting through an elongated opening in the adjacent thermostatic bar, I cause these bars, together with the resistance supported jointly by them, to be held entirely out of contact with the base 13, thereby insuring adequate insulation while enabling the elongated bores through which the screw tips 21 project to allow for the changes in curvature of the thermostatic bars.

However, while I have heretofore described my invention in an embodiment including a pair of thermostatic bars bowed towards each other and having the compressible resistance disposed between their most widely separated points, I do not wish to be limited to these or other details of the construction and arrangement here disclosed, it being obvious that the same might be modified in many ways without departing either from the spirit of my invention or from the appended claims. For example, Fig. 4 shows an embodiment in which each of the thermostatic bars 22 is doubled back

upon itself edgewise to form an inverted U, this being readily accomplished in practice by merely sawing a corresponding vertical slot in a wide bar of thermostatic material. Both of these bars 22 are supported by a single supporting fork 23 which has its arms secured respectively to the two thermostatic bars by bolts 24. These bolts desirably also serve for securing connector terminals 25 and 26 to the respective ends of each thermostatic bar, both the bolts and the thermostatic bars being insulated by insulating blocks 27 from the supporting member 23. Then the insulating tube 8 which carries the resistance disk 6 extends between the bights of the two thermostatic bars, being here shown as supported after the same general manner as employed in the embodiments of Figs. 2 and 5.

By making the insulating tube 8 in either embodiment shorter than the minimum distance between the opposed thermostatic bars, I prevent this from interfering with the compressing action, and by detaching one of the thermostatic bars from its supports, access is secured to the tube and its contents for substituting other resistance elements.

Furthermore, I do not wish to be limited to the use of a pair of opposed thermostatic bars for exerting the variable compressing action in response to the controlling current. For example, Fig. 6 is a vertical and longitudinal section through an embodiment similar to Fig. 4 but in which the compressible resistance is disposed between a rigid portion of the support and a single thermostatic bar.

I claim as my invention:—

1. A rheostat comprising a pair of thermostatic bars arranged so as to be flexed in relatively opposite directions by the same temperature change, means for supporting each bar adjacent to the ends thereof, and a compressible resistance interposed between the medial portions of the two bars and adapted to be varied in resistance by the flexing of the bars.

2. A rheostat comprising a pair of thermostatic bars, a support having means thereon for supporting the two bars adjacent to the ends of the latter and with the bars extending in the same general direction; a circuit in series with both bars, the bars being arranged so as to be flexed in opposite directions by the heating effect of the current flowing through the same, and a compressible resistance interposed between medial portions of the two bars.

Signed at St. Louis, Missouri, May 18th, 1922.

PIERRE I. CHANDEYSSON.