Nov. 11, 1952 J. D. PUTTERBAUGH 2,617,117

ELECTRICALLY OPERATED INVALID'S BED

Filed Feb. 15, 1949 3 Sheets-Sheet 1

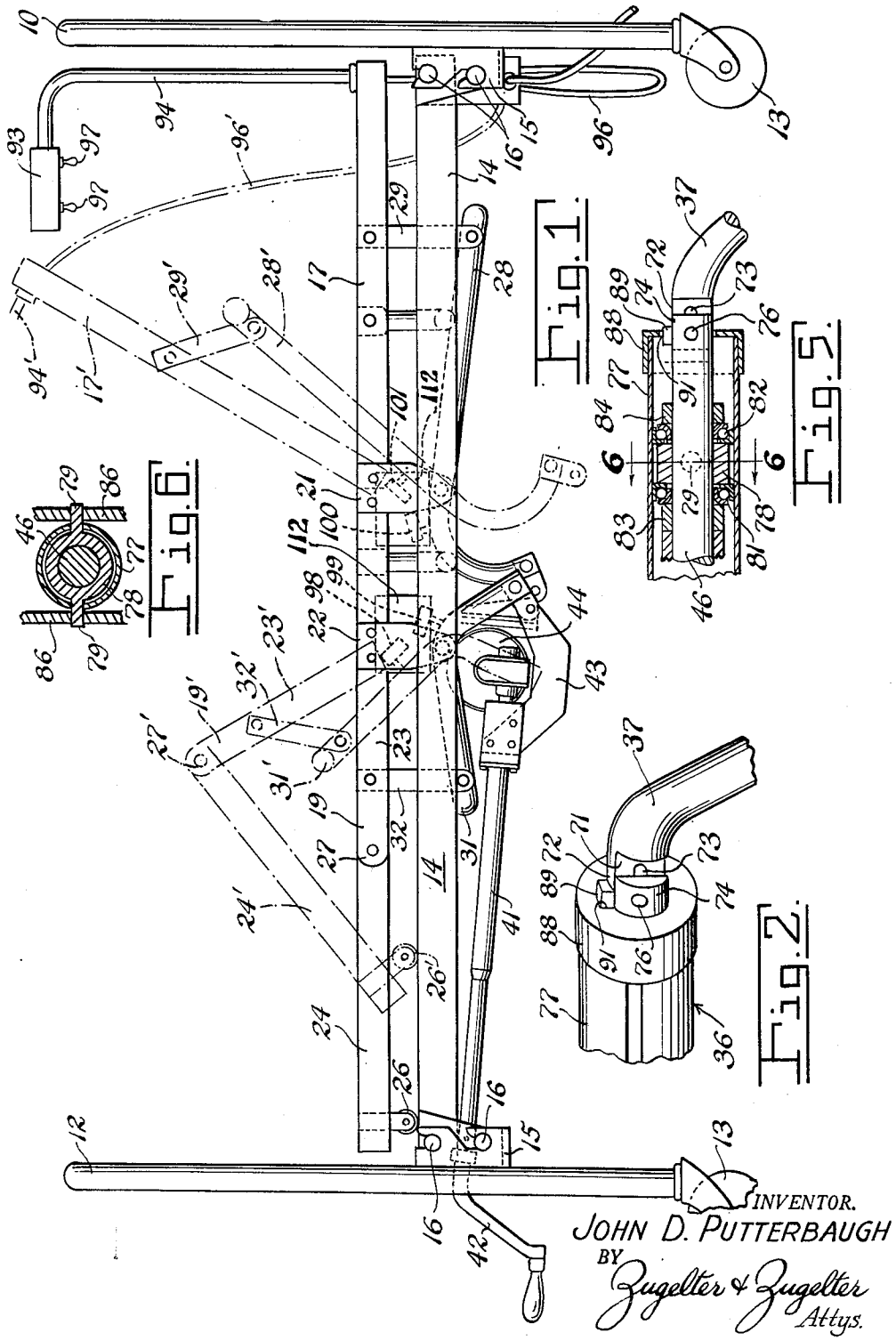

Fig. 1.

Fig. 5.

Fig. 6.

Fig. 2.

INVENTOR.
JOHN D. PUTTERBAUGH
BY
Zugelter & Zugelter
Attys.

Nov. 11, 1952 J. D. PUTTERBAUGH 2,617,117

ELECTRICALLY OPERATED INVALID'S BED

Filed Feb. 15, 1949 3 Sheets-Sheet 2

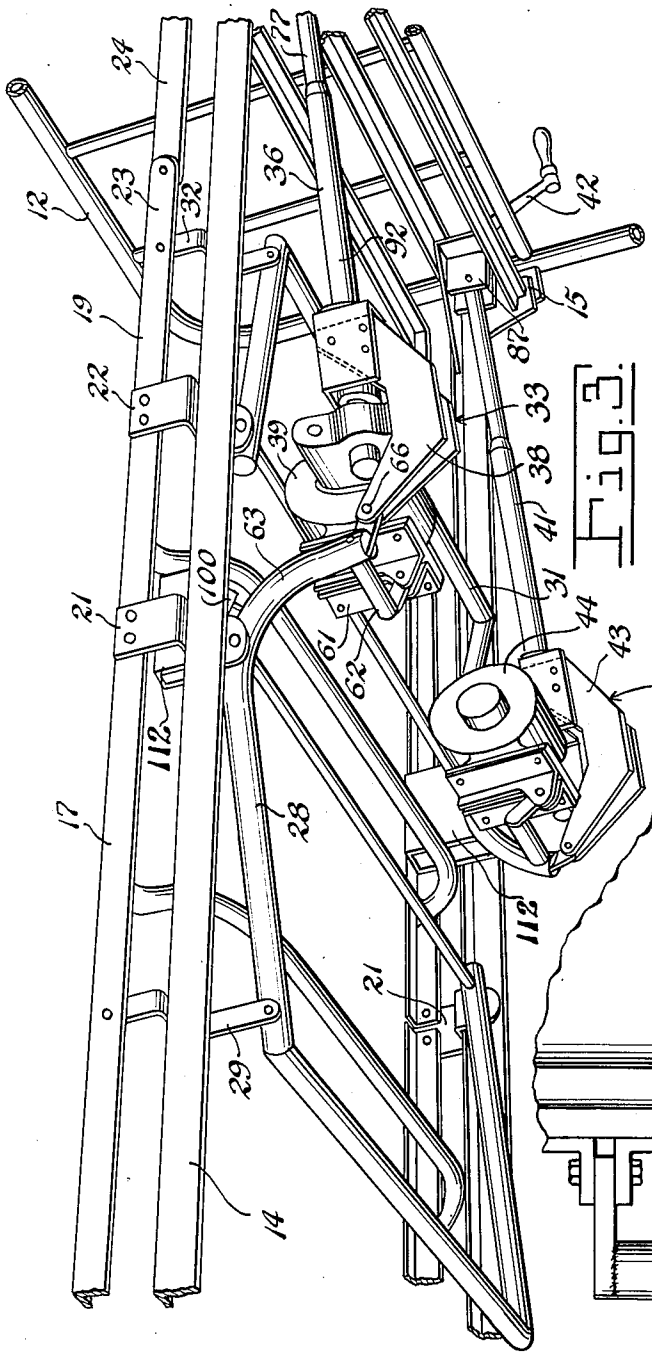

Fig. 3.

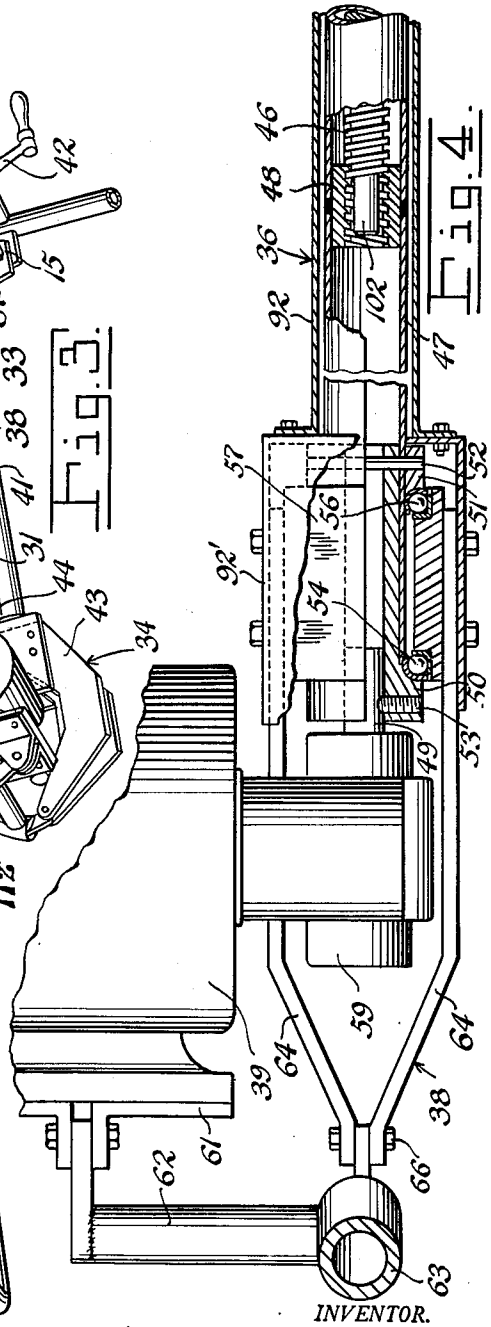

Fig. 4.

INVENTOR.
JOHN D. PUTTERBAUGH
BY
Zugelter & Zugelter
Attys.

Nov. 11, 1952 J. D. PUTTERBAUGH 2,617,117

ELECTRICALLY OPERATED INVALID'S BED

Filed Feb. 15, 1949 3 Sheets-Sheet 3

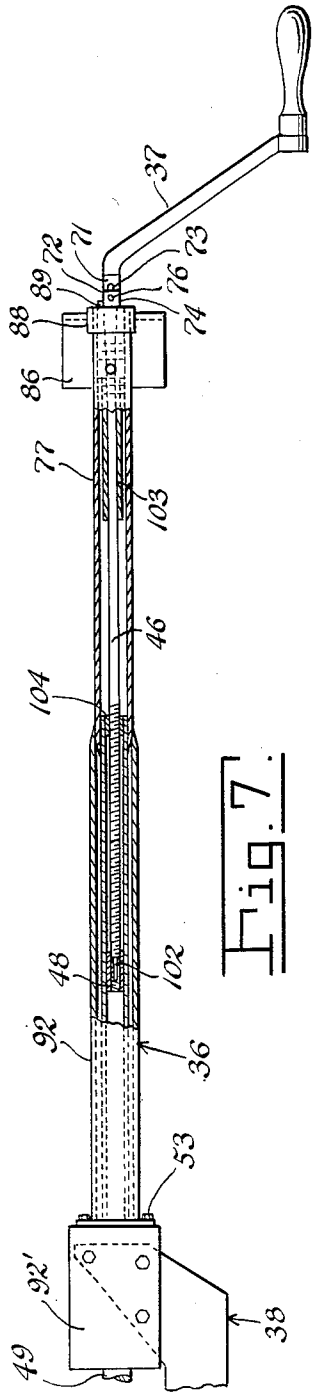

Fig. 7.

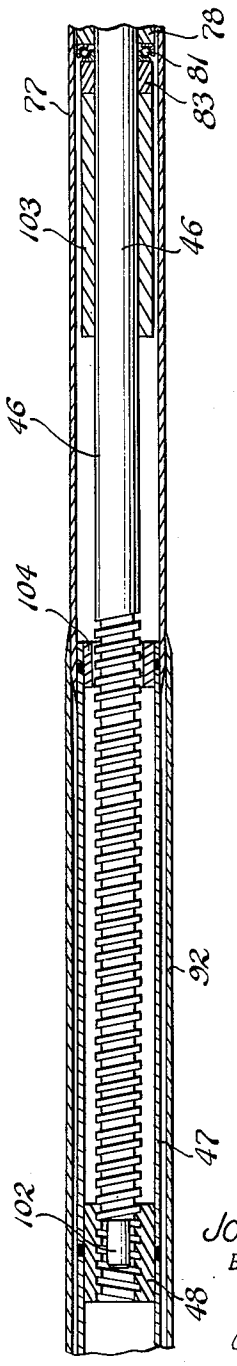

Fig. 8.

INVENTOR.
JOHN D. PUTTERBAUGH
BY Zugelter & Zugelter
Attys.

Patented Nov. 11, 1952 2,617,117

UNITED STATES PATENT OFFICE

2,617,117

ELECTRICALLY OPERATED INVALID'S BED

John D. Putterbaugh, Troy, Ohio, assignor to Campbell and Company, Cincinnati, Ohio, a partnership

Application February 15, 1949, Serial No. 76,596

2 Claims. (Cl. 5—69)

1

This invention relates to hospital or invalid's beds and more particularly relates to an invalid's bed having power operated elevatable head and foot sections which can be controlled by a patient in the bed.

An object of this invention is to provide power operated means controllable by the patient for raising and lowering head and foot sections of a hospital bed.

A further object of this invention is to provide independent power actuated means for independently and selectively raising and lowering the head and foot sections of a hospital bed.

A further object of this invention is to provide power actuated means for raising and lowering sections of a bed and manual means for raising and lowering the sections which manual and power operated means may be actuated independently.

A further object of this invention is to provide power operated means for raising and lowering the sections of a hospital bed which means is located beneath the bed and out of the way.

A further object of this invention is to provide power operated means for raising and lowering sections of the bed which means is wholly enclosed.

The above and other objects are attained by the means described herein and disclosed in the accompanying drawings, in which:

Figure 1 is a view in side elevation of a hospital bed provided with power operated means for raising and lowering head and foot sections thereof arranged and constructed in accordance with an embodiment of this invention.

Fig. 2 is an enlarged fragmentary view showing details of construction of a handle mechanism for use in manual operation of one of the movable sections of the hospital bed.

Fig. 3 is a perspective view showing the underside of the bed illustrated in Fig. 1.

Fig. 4 is an enlarged fragmentary plan view, partly broken away and in section, showing details of the power drive for actuating a bed section.

Fig. 5 is a view in section showing details of construction of the handle mechanism shown in Fig. 2.

Fig. 6 is a sectional view taken along a line 6—6 in Fig. 5.

Fig. 7 is a view in side elevation partly in section showing one of the telescopic actuating members.

Fig. 8 is an enlarged view in section showing details of the telescopic member illustrated in Fig. 7.

2

In the detailed description and the drawings, like reference characters are used to indicate like parts.

In Figs. 1 and 3, a hospital bed is shown which has a head frame 10 and a foot frame 12, each supported by suitable casters 13. A main frame 14 of usual form is supported by brackets 15 on the head and foot frames of the bed. The main frame is supported by lugs 16 which fit into brackets 15 secured to the head and foot frames.

A movable head section 17 and a movable foot section 19 are supported respectively on the main frame by hinge brackets 21 and 22 attached to the main frame. The movable head and foot sections support springs (not shown) in the usual manner. Head section 17 comprises a single unit and is of U-shape, the opposite legs of which are pivoted to hinge brackets 21, while foot section 19 includes two units, an inner portion 23 pivoted to hinge brackets 22 and an outer portion 24 supported at one end by rollers 26 and pivoted at its opposite end 27 to inner portion 22. Hinge brackets 21 and 22 are carried by the main frame of the bed. A head support or actuator frame 28 is pivoted to hinge brackets 21, and push bars 29 extend between frame 28 and head section 17 serving to raise and lower the head section. A foot support or actuator frame 31 is pivoted to hinge bracket 22 and push bars 32 extend between frame 31 and inner foot portion 23 serving to raise and lower the foot section of the bed. The construction of the parts described to this point is well known.

The head and foot sections of the bed are raised and lowered by actuator assemblies indicated at 33 and 34 (Fig. 3) respectively. Head actuator assembly 33 includes an extensible shaft or telescoping tube member 36, a crank 37 (Figs. 2, 5, and 7) at an end of rod 36, a bracket or reach member 38 (Figs. 3 and 4) running between the other end of member 36 and actuator frame 28, and a motor 39 mounted adjacent bracket 38. The motor 39 is a part of the telescoping member 36 and moves and swings with the telescoping member. Foot actuator assembly 34 similarly includes an extensible rod or telescoping member 41, a crank 42 at an end of rod 41, a bracket or reach member 43 running between the other end of rod 41 and foot actuator frame 31, and a motor 44 mounted adjacent bracket 43. The actuator assemblies are positioned below the bed where they in no way interfere with normal use of the bed. The cranks are located at the foot of the bed in the usual position and may be turned for manual raising and lowering of the head and foot sec-

tions in the usual manner. The motors provide power for automatic operation of the assemblies and the motors may be of a reversible type so that each motor can both raise and lower the section of the bed with which it is associated. Since both assemblies are of substantially the same construction and operate in the same manner, only head assembly 33 will be described in detail.

As shown in Figs. 4, 7 and 8 the extensible rod or telescoping member 36 includes an elongated screw 46 disposed within a tubular drive sleeve 47. A nut 48 fixed within sleeve 47 is threaded onto screw 46.

Sleeve 47 is connected to a stub drive shaft 49 by means of rotatable inner and outer bearing sleeves indicated at 50 and 51 respectively. Inner bearing sleeve 50 fits inside drive sleeve 47, while outer bearing sleeve 51 fits around drive sleeve 47 and inner bearing sleeve 50. A pin 52 passes through bores in sleeves 47, 50, and 51 to hold the sleeves in assembled relation. Inner bearing sleeve 50 fits over stub shaft 49. A radial set screw 53 in sleeve 50 bears on a flat side of stub shaft 49 to cause the shaft and sleeves to turn together.

The bearing sleeves form supports for outer retainers of bearings 54 and 56. A block 57 fits about the sleeves, and opposite ends of block 57 form supports for inner retainers of the bearings. Block 57 in turn is firmly bolted to reach member 38.

The drive shaft 49 is driven by motor 39 through reduction gearing (not shown in detail) in a gear box 59. As will be understood, the gearing may include a worm driven by the motor shaft and a worm wheel on drive shaft 49 meshing with the worm so that, when the motor is not in operation, the gearing locks shaft 49 against rotation. Motor 39 is carried on a plate 61. Plate 61 in turn is pivoted to a support arm 62 which is welded or otherwise firmly fixed to an actuator arm 63 of head actuator frame 28.

Reach member 38 is made up of two rigid arms 64 which fit on either side of and are attached to block 57. An end of each arm 64 is firmly attached to block 57. The opposite ends of the arms converge and are pivotally linked to a lower end of arm 63 by pivot pin 66. As shown in Fig. 3, pivot pin 66 may be aligned with extensible rod 36. When the head portion of the bed is raised or lowered, reach member 38 takes the thrust from the extensible rod and transmits the thrust to arm 63. Motor 39 can turn sleeve 47 and nut 48 about screw 46 for changing the effective length of the extensible rod. However, the thrust is transmitted directly through bracket 38; and motor 39 and the reduction gearing are supported to swing with reach member 38 but do not receive the thrust.

Details of construction of the crank end of rod 36 are shown in Figs. 2, 5, 6 and 7. As shown in Figs. 2 and 5, crank 37 has flat head surfaces 71, only one of which is shown, which define an integral head plate 72. Head plate 72 is slotted as shown at 73 in Fig. 5. The outer end of screw 46 may be bifurcated to form jaws 74 which fit about crank head plate 72. A pin 76 through the bifurcated jaws links screw 46 to crank 37 for turning together.

A protective and supporting sleeve 77 fits about the head portion of screw 46. Screw 46 is held against axial movement within sleeve 77 and with respect to main frame 14 by a collar 78 and pins 79 which are integral with collar 78 and pivotally support the collar and sleeve for swinging with respect to the main frame. Collar 78 fits between bearings 81 and 82. Collars 83 and 84 are attached to screw 46 on either side of bearings 81 and 82. As shown in Fig. 6, pins 79 are pivotally supported by bracket flanges 86. Flanges 86 in turn are attached to the main frame of the bed. Flanges 86 form a part of a bracket which is of usual construction and is similar in structure to a bracket 37 (Fig. 3) which supports the outer end of rod 41.

As shown in Figs. 2 and 5, a cap 88 fits over the outer end of sleeve 77 and about the bifurcated end of screw 46. A lug 89 is fixed to head plate 72 of the crank, and lug 89 is engageable with a slot 91 in cap 88. When lug 89 is engaged with slot 91, handle 37 is locked against turning, and the nut can be rotated about bolt 46 by motor 39 to raise or lower head section 17 of the bed. When the head portion is to be raised or lowered manually, crank 37 is swung about pivot pin 76 and positioned to the left as shown in Figs. 2, 5 and 7 to disengage lug 89 from slot 91, whereupon screw 46 can be turned with crank 37. During manual operation of the bed, it is unnecessary to lock drive sleeve 47 and nut 48 against rotation for the reduction gearing in gear housing 59 automatically acts to lock the nut and the drive sleeve against rotation as long as motor 39 is not turning.

As shown in Figs. 3, 4, 7 and 8, a protective sleeve or guard tube 92 fits about drive sleeve 47 telescoping over sleeve 77 as the effective length of extensible rod 36 is varied. Guard tube 92 is attached to a cap 92' which fits about block 57 and is attached thereto. During raising and lowering of the head section of the bed, neither sleeve 77 nor guard 92 rotates; and as extensible rod 36 is lengthened or shortened, sleeve 77 and guard 92 telescope.

As shown in Fig. 1, controls for the motors may be mounted in a control box 93 carried on a post 94 attached to movable head section 17. Appropriate cables 96 lead from switch box 93 for controlling the motors. Control switches 97 in switch box 93 preferably are of a spring release type so that the motors remain stationary except when one of the switches is held in closed position.

Limit switches 98, 99, 100, and 101 may also be provided. The limit switches may be connected in the motor circuits to prevent overrunning by the motors. The limit switches may be attached to the main frame of the bed and are mounted in boxes 112 in position to be actuated by the actuator frames when the head and foot sections are fully raised or fully lowered. The limit switches may operate to stop the motors and prevent overrunning in the event that one of the control switches 97 is closed after a movable bed section is fully raised or fully lowered. In Fig. 1, parts of the bed are shown in raised position in dot-dash lines and in lowered position in full lines. The parts of the raised bed have been given the same numbers as parts of the lowered bed with the addition of a prime to each number.

When the foot section reaches the position shown in dot-dash lines, limit switch 98 may be actuated to prevent further raising of the foot section by motor 44. Similarly, when the foot section reaches the position shown in full lines, limit switch 99 is actuated to prevent further lowering of the foot section. Limit switches 100 and 101 similarly may be arranged to stop motor 39 when the head section reaches the limits of its movement.

In addition to the electrical limit switches,

positive mechanical stops may be provided to protect the bed and an occupant of the bed if the electrical limit switches fail. The mechanical stops further act to prevent manual raising and lowering of the bed sections beyond desired limits. As shown in Figs. 7 and 8, screw **46** includes an unthreaded tip on guide **102** which can fit inside nut **48**. When the screw is fully retracted in nut **48** and the head section is fully raised, the threads of the screw come free from the nut, whereupon further rotation of the nut or screw causes no further raising of the head of the bed. However, when the rotation is reversed, the weight of the head of the bed causes the screw and nut to re-engage and lower the bed, and the guide tip **102** directs the screw into the nut to cause the threads to re-engage.

Downward movement of the head section of the bed is halted by a stop sleeve **103** which fits about the shank of screw **46**. The stop sleeve **103** may be fixed to collar **83** or may be free to slide along the shank of the screw. An annular guide bushing **104** is fixed to the inside of drive sleeve **47** adjacent the free end thereof. The guide bushing fits about the shank of screw **46**, and as the head section of the bed is lowered, bushing **104** advances along the shank of screw **46** and abuts stop sleeve **103** when the head of the bed has reached fully lowered position.

The mechanical stops illustrated in Fig. 8 may be used in conjunction with the electrical limit switches, or if the motors have appropriate windings to permit the motors to stall, the mechanical stops can be used alone without need for the electrical limit switches. It will be understood that the telescoping member **41** may include mechanical stops similar in construction to those just described in member **36**.

The sections of the bed of this invention can be raised or lowered by a patient in the bed without help through the operation of control switches **97**, or the bed sections can be manually raised and lowered by an attendant in the usual manner. It is unnecessary to disconnect the drive to either motor to permit manual raising and lowering of bed sections. All parts of the operating mechanism are enclosed and located below the main frame of the bed where they are out of the way.

The embodiment of the invention described above and illustrated in the drawings admits of modification without departing from the spirit and scope of the appended claims.

Having described my invention what I claim as novel and desire to secure by Letters Patent is:

1. A hospital bed comprising a main frame, a movable section mounted on said main frame, an actuator frame pivotally attached to the main frame and linked to the movable section to raise and lower the movable section, an actuator arm attached to said actuator frame and adapted to swing said actuator frame for raising and lowering said movable section, a reach member pivotally connected to said actuator arm, a hollow tubular guard sleeve rigidly connected to said reach member, a drive sleeve coaxial with and rotatably mounted inside said guard sleeve, a motor pivotally mounted on said actuator arm and connected to the drive sleeve in driving relation thereto, a nut mounted inside said drive sleeve, a screw in threaded engagement with said nut, another guard sleeve surrounding said screw, one end of said other guard sleeve being in telescopic engagement with the first mentioned guard sleeve, a bearing inside said other guard sleeve at the other end thereof and supporting the shank of the screw, means pivotally connecting said other guard sleeve at the bearing to said main frame, and means for locking said screw against turning in said bearing, whereby operation of the motor raises and lowers the movable section.

2. A bed in accordance with claim 1, characterized by the fact that the nut is spaced between the ends of the drive sleeve, that a bearing thimble is disposed inside the free end of the drive sleeve, the screw turning inside of and spaced from the bearing thimble when in engagement with the nut, that a guide tip projects axially from the free end of the screw, the guide tip and the bearing thimble supporting the screw when out of threaded engagement with the nut, and that the actuator arm swings in direction to hold the free end of the screw in engagement with the nut when the nut and screw are turned out of threaded engagement and the movable section of the bed is weighted.

JOHN D. PUTTERBAUGH.

REFERENCES CITED

The following references are of record in the file of this patent:

UNITED STATES PATENTS

Number	Name	Date
2,092,563	Tucker	Sept. 7, 1937
2,150,813	Ball	Mar. 14, 1939
2,261,980	Drexler	Nov. 11, 1941
2,337,284	Urie	Dec. 21, 1943
2,349,701	Buttikofer	May 23, 1944
2,373,018	Deckert	Apr. 3, 1945
2,500,742	Taylor	Mar. 14, 1950