Feb. 10, 1970 G. B. POZZOLO 3,494,012

APPARATUS FOR UNIFORMLY STRETCHING WARP THREADS IN A FRINGING PROCESS

Filed May 22, 1967 3 Sheets-Sheet 1

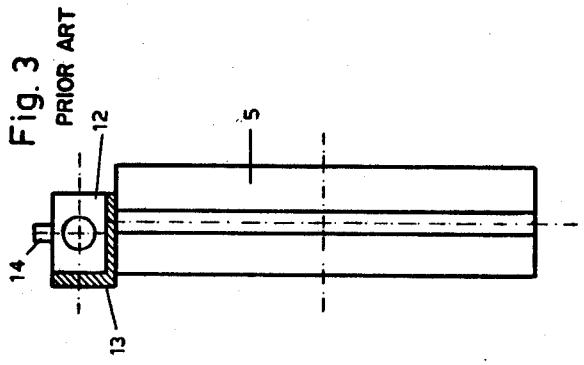

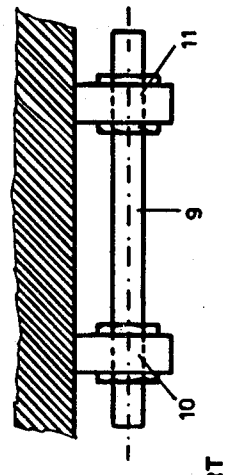

Fig. 2
PRIOR ART

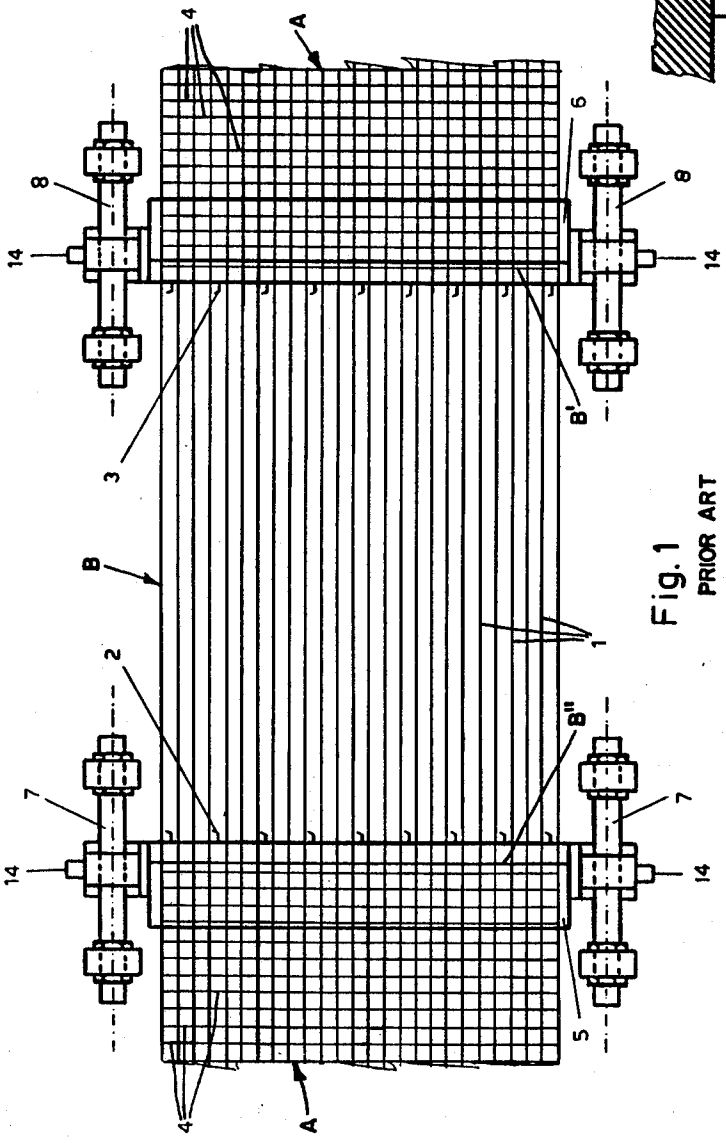

Fig. 1
PRIOR ART

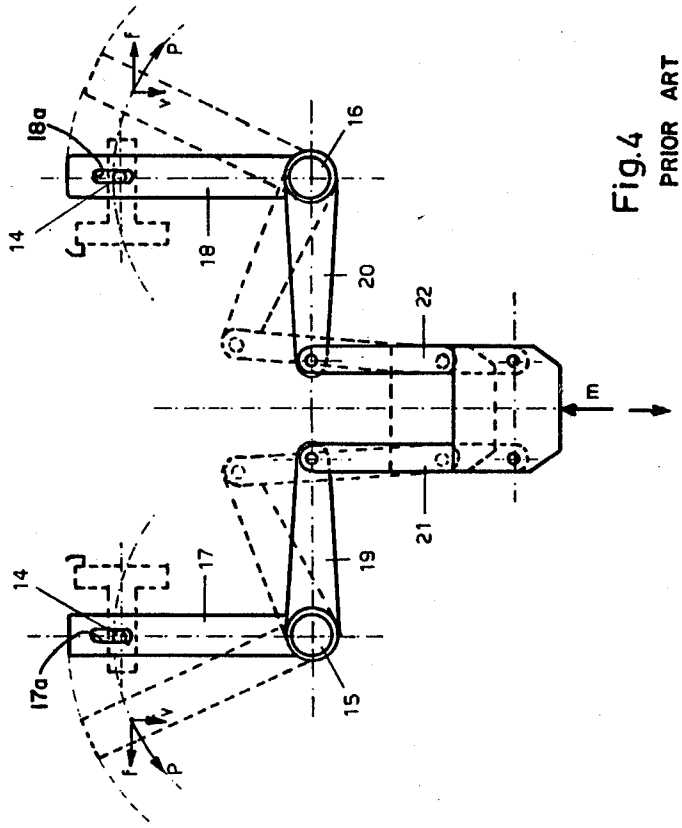

Fig.4
PRIOR ART

Feb. 10, 1970 G. B. POZZOLO 3,494,012

APPARATUS FOR UNIFORMLY STRETCHING WARP THREADS IN A FRINGING PROCESS

Filed May 22, 1967 3 Sheets-Sheet 3

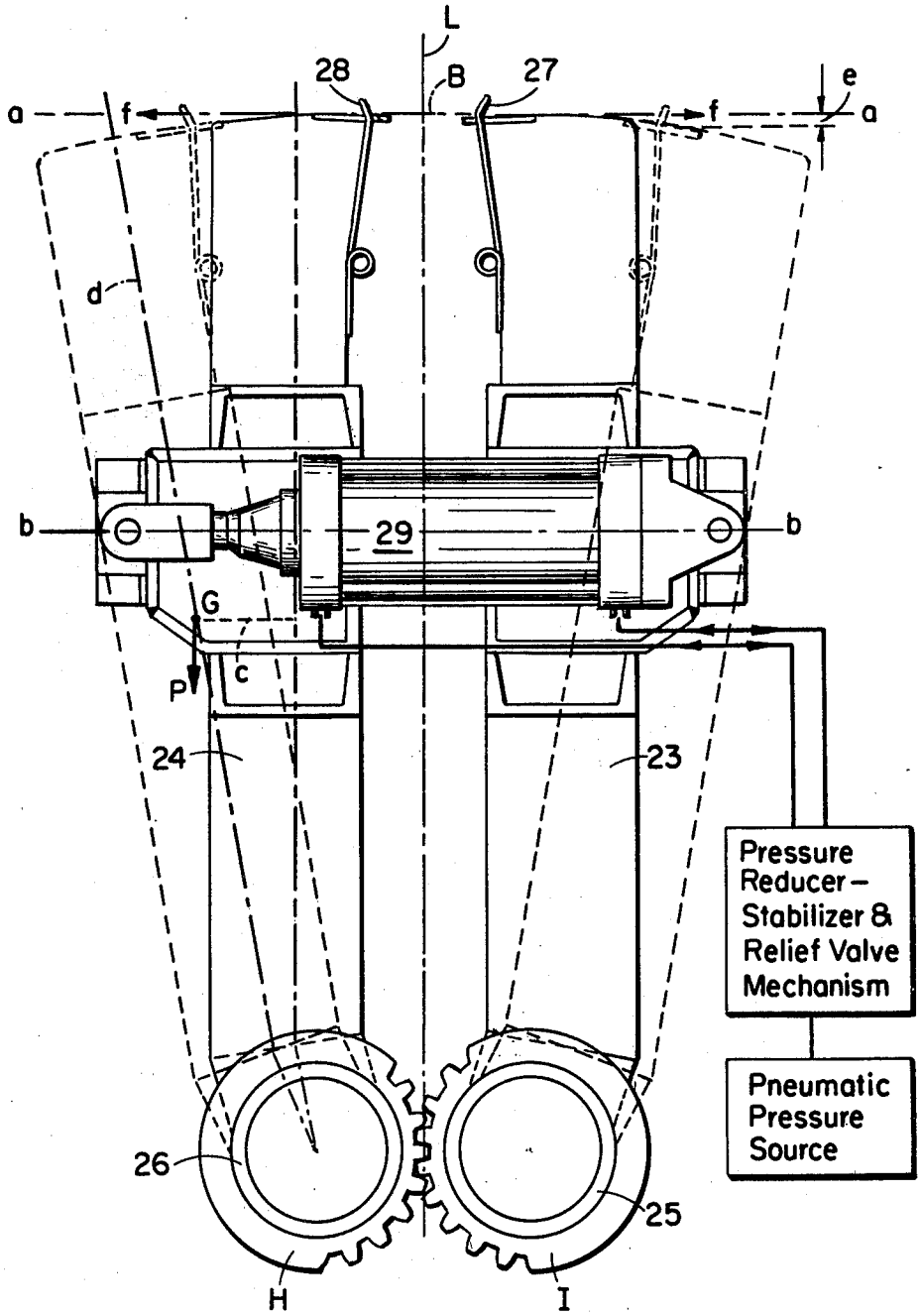

FIG.5

United States Patent Office 3,494,012 Patented Feb. 10, 1970

3,494,012

APPARATUS FOR UNIFORMLY STRETCHING WARP THREADS IN A FRINGING PROCESS

Giovanni Battista Pozzolo, 2 Via Nazionale, Lovere, Italy

Filed May 22, 1967, Ser. No. 639,997
Claims priority, application Italy, June 8, 1966, 18,811
Int. Cl. D02j *1/18;* D02h *13/26*
U.S. Cl. 28—1 2 Claims

ABSTRACT OF THE DISCLOSURE

An apparatus for stretching a field of warp threads in a fabric in which a pair of opposed, elongated frame panels extend over the width of a fringing machine and have their bottom edges pivotally mounted at the base of the machine, the upper edges carrying a plurality of resilient pin members which are inserted into the warp thread field to stretch the warp threads. Each of the frame panels carries a gear wheel at each end thereof, opposed gear wheels being in meshing engagement, and a pneumatic cylinder is pivotally mounted between the frame panels for urging them apart.

BACKGROUND AND OBJECTS OF THE INVENTION

The present invention relates generally to fringing machines and relates more particularly to a new and improved system for uniformly stretching the warp threads and, subsequently, the fringes, during the entire fringing process.

In order to automatically carry out the fringing process, it requires that the warp threads are continuously kept in tension so that they may be subdivided into bundles by means of combs and countercombs and to prevent the threads of a particular bundle from being transferred to the next adjacent bundle.

Heretofore, the stretching of the warp threads has been performed by two beams moving on horizontal guides in opposite directions symmetrically to the vertical center line of the machine, each of the beams carrying a series of resilient pins which are inserted into a field of warp threads only to be transformed into fringes, the beams urging the pins against the edges of the fabric bordering the field of warp threads, whereby the latter are stretched.

As presently practiced, the abovementioned beams are urged apart through a system of pivoting levers which impress on the beams a force which includes both horizontal and vertical components. The frictional resistances produced by the vertical components of force, and particularly the frictional resistances to the movement of the beams produced by the weight of the beams themselves, are, particularly where light shawls are being worked, comparable to the entire stretching force required for the working of the fringes and, as these resistances depend on such unpredictable factors as the lubrication of the beam guides, and as they have to be compensated for by the beam actuating forces, it follows that no certain correspondence exists between the values of the beam forces and the resulting stretching force and therefore it is impossible to but roughly adjust the stretching of the fringes by adjusting the forces acting on the beams.

It is therefore an object of the present invention to provide, in a fringing machine, a system for stretching

fringes which does not present the aforementioned disadvantages of the prior art but maintains the stretching of the fringes constant and proportional to the actuating forces *f*, so that, by adjusting the latter, it is possible at the same time to adjust the stretching force.

Objects and advantages of the invention are set forth in part herein and in part will be obvious herefrom, or may be learned by practice with the invention, the same being realized and attained by means of the instrumentalities and combinations pointed out in the appended claims.

The invention consists in the novel parts, constructions, arrangements, combinations and improvements herein shown and described.

It will be understood that the foregoing general description and the following detailed description as well are exemplary and explanatory of the invention but are not restrictive thereof.

The accompanying drawings, referred to herein and constituting a part hereof, illustrate one embodiment of the invention, and together with the description, serve to explain the principles of the invention.

BRIEF DESCRIPTION OF THE DRAWINGS

FIGURE 1 is a top plan view, partly schematic, showing a field of the warp threads to be stretched in a fringing process, and illustrates the stretching structure of the prior art, wherein two beams, each carrying a series of resilient pins, are urged apart, thereby urging the pins against the fabric at the opposed edges of the warp thread field, to thereby stretch the warp threads;

FIGURE 2 is a fragmentary view in elevation, partly sectional, illustrating the guide members for the prior art beams illustrated in FIGURE 1;

FIGURE 3 is a view in end elevation, partly sectional, illustrating the structure of the prior art beam of FIGURE 1;

FIGURE 4 is a view in elevation, partly in dotted lines, illustrating the prior art system of pivoting levers for urging the beams of FIGURE 1 apart in order to stretch the warp threads; and

FIGURE 5 is a view in elevation, partly schematic, of a mechanism constructed in accordance with the invention for stretching a field of warp threads in a fabric being fringed.

DESCRIPTION OF THE PRIOR ART

Referring now more particularly to FIGURES 1–4 of the accompanying drawings, there is shown a fabric A having formed therein a thread field B comprised only of warp threads **1** to be divided into bundles and thereafter twisted so that the bundles are formed into fringes.

According to the prior art, the warp threads **1** are stretched by two series of resilient pins **2**, **3**, which are inserted between the warp threads **1** and are pressed against the edges B′, B″ of the fabric portion A which contains the weft threads **4**. The two series of resilient pins **2**, **3** are secured to beams **5**, **6** respectively, the latter sliding on pairs of round guides **7**, **8** fixedly secured to the frame of the machine.

As best seen in FIGURE 2, each of the prior art guides **7**, **8** of FIGURE 1 comprises a cylindrical body **9**, suitably locked by means of nuts and lock nuts to support members **10**, **11** joined to the frame of the fringing machine at a sufficient distance apart so as to accommodate the travel required for the beams **5**, **6**. As best seen in

FIGURE 3, the beams **5**, **6** are coupled to the guides **7**, **8** by inserting the cylindical body **9** thereof into the round cavity of member **12**, the latter being rigidly secured to each of the beams by an L-shaped section member **13**.

At each end of each of beams **5**, **6** there is provided a pin **14** which is mounted in a slot provided in an actuating lever and serves to transmit the actuating forces from a lever system to the beam members, to thereby move the latter in opposite, parallel directions, as more fully described immediately hereinbelow.

Thus, the beam actuating system of the prior art, as best seen in FIGURE 4, comprises, a pair of hollow shafts **15**, **16**, each of a length equal to the width of the fringing machine and rotatably supported to the machine frame, each of shafts **15**, **16** carrying at their respective ends a pair of lever members **17**, **18**, the latter serving to actuate the beams **5**, **6** by means of the pins **14** which slide in the vertical slots **17***a*, **18***a* formed in levers **17**, **18**.

The hollow shaft members **15**, **16** are rotated by arms **19**, **20** fixedly secured thereto at one end and at the other end linked to connecting rods **21**, **22**, respectively, the latter, in turn, being raised and lowered by a propelling system (not shown).

It will be apparent from the foregoing description that a force *m* applied to the rods **21**, **22** transmits to the ends of beams **5**, **6** two equal, opposed forces P, whose horizontal components *f* cause the symmetric shifting of the beams **5**, **6** in opposite parallel directions, whereby the resilient pin members **2**, **3** are urged against the edges B′, B″ of the fabric carried by the fringing machine, stretching the warp threads **1** in the thread field B.

However, it has been found that in the prior art systems such as that described hereinabove, the weight of the beam members **5**, **6** is considerable and the lubrication of the guides on which the beams slide is difficult and constantly changing, as a result of which the friction forces to be overcome in order to move the beams are considerable. Furthermore, the friction forces to be overcome are further increased by the friction forces deriving from the vertical components *v* of the forces P applied to the beams. In addition, since the guides of the type described are difficult to align, and once aligned easily loose their alignment, the total friction is often even further increased.

The presence of the aforementioned frictional forces, and their considerable variation from time to time is highly disadvantageous and troublesome since, upon the application of a predetermined actuating force to the beams **5**, **6**, the actual stretching on the warp threads and fringes produced therefrom is considerably different from time to time, resulting in the formation of uneven fringes and difficulty in reproducing identically formed fringes in more than one fabric.

It will thus be seen that the existence of the friction forces in the prior art systems makes it impossible to determine the proportionality between the force which is applied to the beams and the resulting stretching force applied to the warp threads, and, consequently, it is impossible to regulate the stretching of the threads with any degree of precision, or even to keep it constant.

DESCRIPTION OF THE PREFERRED EMBODIMENT

Referring now more particularly to FIGURE 5 of the accompanying drawings, there is shown a mechanism in accordance with the invention for stretching the warp threads in a fabric, which eliminates the friction problems of the prior art, and provides an improved mechanism which can be fully and accurately controlled so that the necessary forces for stretching the threads can be accurately regulated throughout the fringing process.

To this end, there is provided a pair of opposed, frame panel members **23**, **24**, adapted to rotate about pivot points **25**, **26**, respectively, the latter being supported at the base of the fringing machine. Each of the frame panel members **23**, **24** carries a gear wheel H, I, respectively, at each end thereof, the opposed gear wheels being in meshing engagement with each other. It will thus be seen that counter-clockwise rotation of frame **24** results in a corresponding clockwise rotation of frame **23** and, hence, each frame member will undergo an equal amount of pivotal movement away from the center line L of the fringing machine upon actuation. Frames **23**, **24** have the same width as that of the fringing machine and have on the upper edges thereof a series of resilient pins **27**, **28**, respectively, for insertion into the warp thread field B and engagement with the edges B′, B″ of the fabric A, more fully described hereinbelow.

The frame members **23**, **24** are urged apart, and the field of warp threads thereby stretched by pins **27**, **28** by means of pneumatic horizontal cylinder **29**, which is hinged at each end thereof to both of the frame members, and connected to a suitable source of pneumatic pressure.

It will be apparent from the foregoing that, by mounting the frames **23**, **24** at the base of the fringing machine they are of such height that, even in the presence of a thread field B to be fringed having a very long length, only small rotations of the frames around their pivots **25**, **26** are required to stretch the threads, and it can therefore be assumed that the driving force exerted by the cylinder **29**, and the resulting stretching forces *f* applied to the warp threads act along parallel directions *aa* and *bb*.

Furthermore, it will be seen that, in comparing the long arm *d* of the force *f* applied to the warp threads with the arm *c* of the weight force P applied to the center of gravity *g* of the frame members, the effect of the latter force is so negligible as to the effect of the former force, that the force *f* applied to the warp threads will be directly proportional to the driving force applied to the frames by the cylinder **29**. Accordingly, by accurately regulating the pressure of the cylinder **29** against the frame members, it is possible to accurately regulate the stretching force *f* which is applied to the warp thread field B.

Also, due to the height of the frame panel members **23**, **24** only small rotations are required for stretching thread fields of even very substantial lengths and, accordingly, the resilient pin members **27**, **28** are lowered only a small amount *e* and therefore will always contact the fabric edges B′, B″.

Finally, in accordance with the invention, means are provided for maintaining a constant pressure in the pneumatic cylinder **29** during the fringing process and, consequently, applying a constant stretching force to the warp threads.

To the end of maintaining the stretching force constant, there is provided a suitable pressure reducer stabilizer and relief valve mechanism in the pneumatic pressure feed line to cylinder **29**, as illustrated in FIGURE 5. Upon an increase in the pressure in cylinder **29** above the desired amount, the pressure reducer and relief mechanism reduces the pressure within the cylinder until the original desired amount is reached, permitting the frame panel members **23**, **24** to pivot slightly inwardly. Of course, upon the inward pivoting of the frames, the arms *c* of the weight-forces P become shorted and, thus their already negligible contribution to the stretching force which is applied to the thread field is decreased still further.

What I claim is:

1. In a fringing machine carrying a fabric having a field of warp threads to be formed into fringes, the improvement therein which comprises:

apparatus for stretching said warp threads during the fringing process which includes:

a pair of opposed, frame panel members extending over the width of the fringing machine, pivotally mounted at their bottom edges to the base of said machine and carrying a series of

resilient pin members on their upper edges which extend into said field of warp threads,

each of said frame members carrying a gear wheel at each bottom end thereof, opposed gear wheels of said frame members being in meshing engagement,

a pneumatic cylinder pivotally interconnected between said frame members, and

a source of pneumatic pressure communicating with said cylinder,

whereby pressure supplied to said cylinder urges said frame members to pivot apart, whereupon said resilient pin members engage said fabric at the edges of said thread field, thereby stretching the warp threads.

2. A fringing machine as claimed in claim 1, including a pressure reducer-stabilizer and relief valve mecha-

nism between said pneumatic cylinder and said pressure source for maintaining a constant pressure in said cylinder.

References Cited

UNITED STATES PATENTS

3,036,815	5/1962	Branick	254—50.3

FOREIGN PATENTS

13,897	1852	Great Britain.
4,221	1877	Great Britain.
868,254	5/1961	Great Britain.

ROBERT R. MACKEY, Primary Examiner

U.S Cl. X.R.

28—15, 17; 254—50.3