Sept. 20, 1938. A. BRUNNER 2,130,521

PUMP

Filed May 10, 1933 2 Sheets-Sheet 1

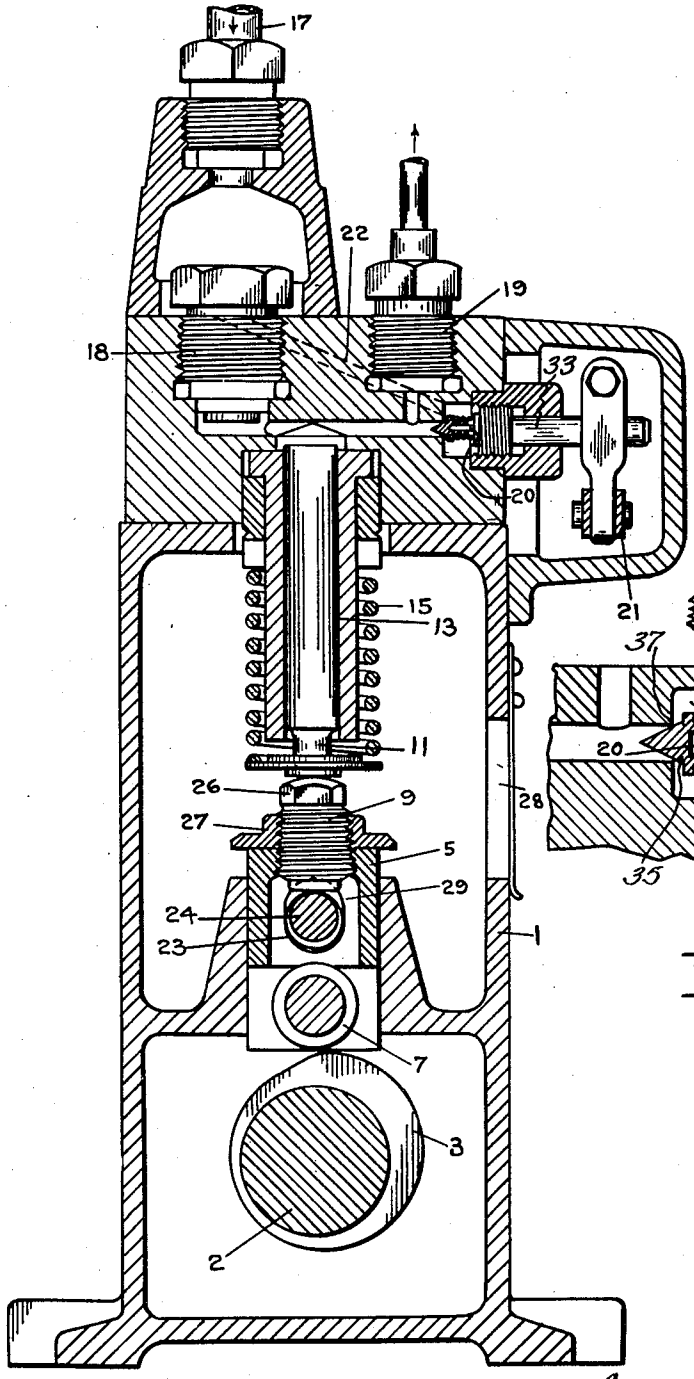

Fig. 1

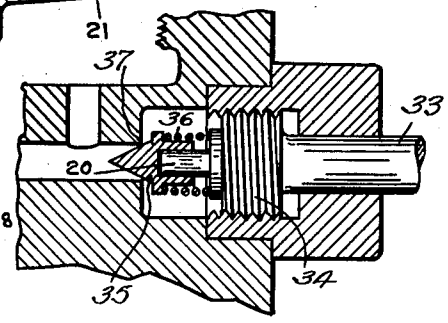

Fig. 3

INVENTOR:
Anton Brunner
BY
Edmund Cowgan Brown
Elizabeth C. Brown, ATTORNEYS.

Sept. 20, 1938. A. BRUNNER 2,130,521

PUMP

Filed May 10, 1933 2 Sheets-Sheet 2

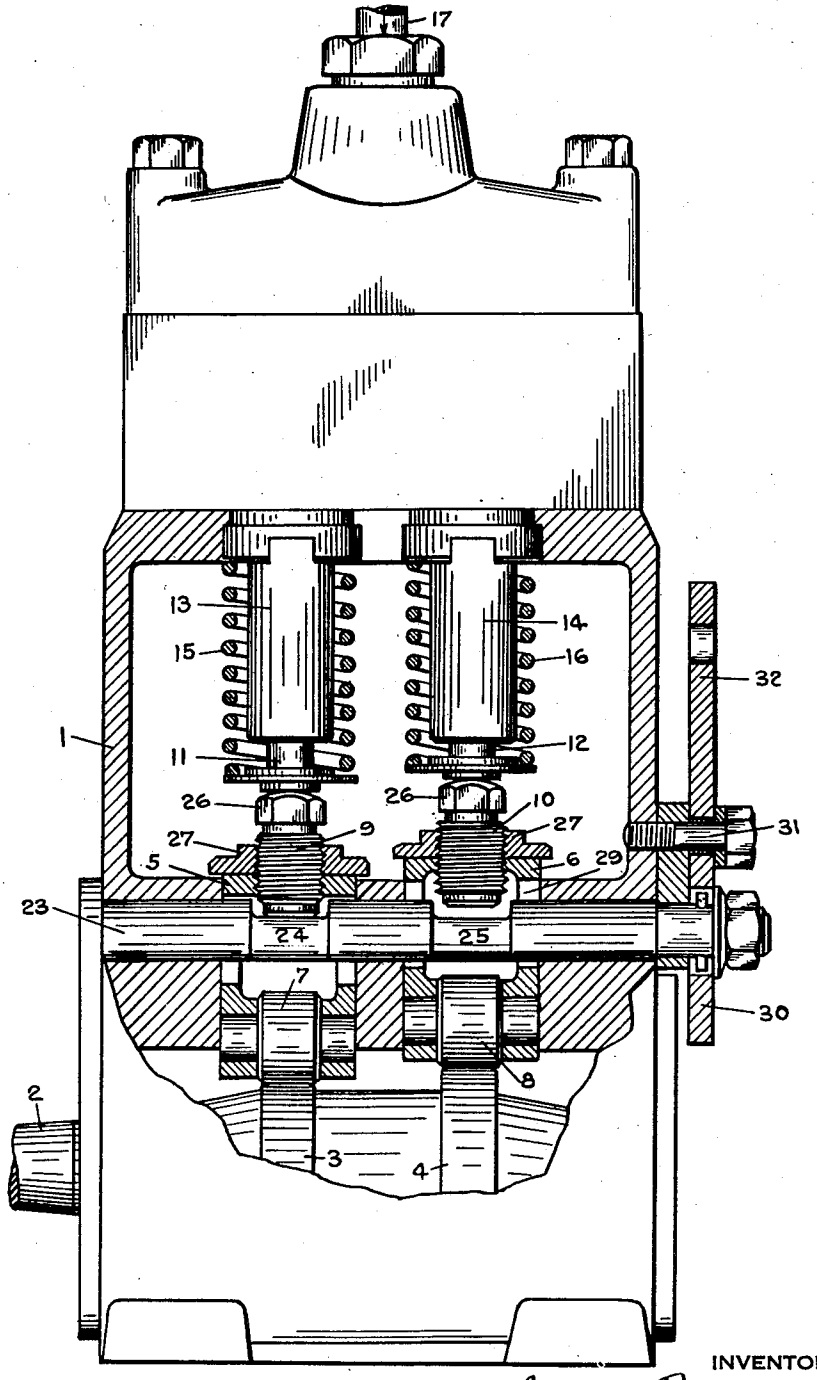

Fig-2

INVENTOR:
Anton Brunner
BY
Edmund Cowgan Brown
Elizabeth b. Brown, ATTORNEYS.

Patented Sept. 20, 1938 2,130,521

UNITED STATES PATENT OFFICE

2,130,521

PUMP

Anton Brunner, Munich, Germany, assignor to Friedrich Deckel, Munich, Germany

Application May 10, 1933, Serial No. 670,265
In Germany May 14, 1932

9 Claims. (Cl. 103—38)

The invention relates to pumps, and more particularly to fuel injection pumps for internal combustion engines in which for regulating and controlling the quantity of fuel the pressure chamber of the pump is connected through a throttle valve with the suction chamber or a return line.

One of the principal objects of the invention is to provide such a device which shall comprise simple, efficient and satisfactory means for regulating, stopping and hand-operating the same, which can also be manufactured cheaply, is light in weight, and which shall effect a considerable saving in space due to its extraordinary compactness. Further objects and advantages of the invention will be in part set forth in the following specification and in part will be obvious therefrom without being specifically pointed out, the same being realized and attained by means of the instrumentalities and structural characteristics and relative arrangements and combinations which will be hereinafter more fully described or which will be pointed out in the claims hereof.

The adjusting of pump units of a multicylinder fuel injection pump by means of a throttle valve and the regulating of the quantity of fuel during operation by changing the lift of plungers of the pump by means of varying the clearance between cam shaft and rocker lever operating said plunger is well known. This method has the disadvantage that, even when the throttle valve is opened slightly, at low revolutions of the motor too great a quantity of fuel delivered by the pump plunger will escape through the throttle valve. In addition, the changing of the clearance between cam and rocker lever during operation is disadvantageous because the beginning of injection will be varied thereby. In accordance with the present invention an opposite method will be employed, by means of which the throttle valve will be used for regulating the fuel quantity during operation and the setting of all the pump units as well as the individual adjusting of pump units will be accomplished by additional regulating members which will affect the plunger lift. This method has the advantage that the set maximum quantity of fuel will be delivered to the fuel injectors also at low revolutions (and at any revolutions) of the motor, and at variable revolutions the beginning of injection remains always constant.

With the above and other objects of the invention in view, the invention consists in the novel construction, arrangement and combination of various devices, elements and parts, as set forth in the claims hereof, one embodiment of the same being illustrated in the accompanying drawings and described in this specification.

In the accompanying drawings,

Fig. 1 is a sectional view showing diagrammatically a two-unit fuel injection pump embodying my invention;

Fig. 2 is a view, partly in section, looking from the right in Fig. 1; and

Fig. 3 is a detail view on an enlarged scale, hereinafter more fully referred to.

In carrying the invention into effect in the embodiment which has been selected for illustration in the accompanying drawings and for description in this specification, I provide a pump housing 1, in the lower part of which is located the cam-shaft 2 which carries the cams 3 and 4. The tappets 5 and 6 which carry the cam follower rollers 7 and 8 are actuated by the cams 3 and 4, and transmit their movement by means of screws 9 and 10 to the plungers 11 and 12 which slide in bushings 13 and 14. The plungers are returned by springs 15 and 16.

During the downward motion of the plunger the fuel, carried to the pump through conduits 17, will be admitted through suction valve 18, and during the upward motion of the plunger the fuel is delivered to the fuel injector through discharge valve 19. In the pressure chamber of the pump, near the discharge valve, is located the throttle valve 20. This throttle valve 20, which is operated through linkage 21 by a governor of known design (not shown), permits, in accordance with the revolutions and load of the motor, the return of more or less quantity of the delivered fuel through the passage 22 back to the suction chamber. When starting the motor the throttle valve is preferably in a closed or almost closed position.

The throttle valve 20 above mentioned is preferably of the form best shown in Fig. 3. A rotatable spindle 33 is provided with screw threads 34 so that as the spindle is turned, it is also moved longitudinally. Beyond the screw threads, the spindle has a smooth cylindrical portion on which the valve member 35 is loosely rotatable and longitudinally slidable. A light coiled spring 36 tends to press a conical portion on the member 35 into contact with the valve seat 37. Thus on the suction stroke of the plunger 13, the throttle valve closes, preventing the drawing in of fuel from the by-pass or overflow passageway. But on the pressure stroke of the plunger 13, the pressure within the fuel delivery passageway

opens the valve against the action of the spring 36, and allows a portion of the pumped fuel to escape through the throttle valve to the by-pass passage 22. The extent to which the valve may open is controlled by the adjustment of the spindle 33, which limits the extent to which the member 35 may move away from its seat 37. The capacity of the throttle valve, when adjusted to its maximum degree of opening, is such that all of the pumped fuel may pass out through the throttle valve and none of it will be injected into the internal combustion engine.

By reason of the loose fit of the valve member 35 on the spindle, the conical part of the valve member may readily adjust itself to proper position on the valve seat 37. Also, when the spindle is turned to change the extent of opening of the valve, the valve member 35 need not turn with the spindle, thus avoiding wear on the valve seat and on the conical surface of the valve member, whereby the life of these parts is considerably increased.

In the pump housing 1 is also located the regulating shaft 23, which pierces the tappets 5 and 6; inside the tappets, at the places designated 24 and 25, it is made eccentric and serves as stops for the lower ends of the screws 9 and 10 respectively. These screws 9 and 10 can be adjusted upward or downward in the tappets by the hexagon heads 26, and locked by lock nuts 27; the opening 28 in the pump housing permits access to these screws 9 and 10 during operation. The vertical sides of the slots 29 which slide on the regulating shaft 23 prevent thereby the rotating of the tappets.

Outside the pump housing the regulating shaft 23 carries a disk 30, having a scale thereon and from which the existing plunger lift can be ascertained at any time. Screw 31 serves for holding the regulating shaft 23 in such position as may be desired. The disk 30 is also provided with a lever 32, for operating the pump by hand.

The regulating shaft 23 operates in such a manner that according to its position the cam followers 7 and 8 are lifted from cams 3 and 4 more or less. In Fig. 2 the regulating shaft is shown set for maximum fuel delivery, the eccentrically machined portions of the shaft being in their lowest position. The tappet 5, shown at the left in Fig. 2, is in its lower dead point; the cam follower roller 7 bearing on the cam 3 and the screw 9 touching eccentric 24 of the regulating shaft 23. The tappet 6, shown at the right, is in its upper dead point, in which position the screw 10 is lifted from the eccentric 25. It is easy to comprehend that by rotating the regulating shaft, i. e., by raising the eccentrics 24 and 25, the cam follower rollers 7 and 8 can be lifted from the cams 3 and 4 more or less, or lifted entirely away from the cam. The regulation as mentioned previously serves for adjusting the pump in such a manner that when the throttle valve is entirely or almost entirely closed, only the specified quantity of fuel will be delivered. The last-mentioned regulation, that is to say, in which the eccentrics are in their uppermost position, serves for stopping all of the pump units, and will be used only during failures of throttle valves or their operating linkages. This adjustment of the parts is shown in Fig. 1.

Furthermore, it can be seen that independently of the position of the regulating shaft 23, the cam followers 7 and 8 can be lifted from the cams slightly or entirely by screwing downwards the screws 9 and 10; this arrangement can be used for cutting out of operation a plunger or adjusting its stroke so that all of the plungers will deliver equal quantities of fuel. Without altering this individual adjustment of the plungers, the regulating shaft 23 may be turned to adjust the strokes of all of the plungers as a group, so that the amount of fuel delivered by the plungers may be made exactly equal to the maximum fuel requirements of the associated internal combustion engine, with the result that when the engine is operating under full load, no by-passing of fuel is required and the by-pass throttle valves may be completely closed. Such operation of the pump with the by-pass throttle valves completely closed is especially desirable in connection with engines which must operate at widely varying speeds, such as automobile engines, because when a by-pass valve is partly open, the quantity of fuel delivered to the engine upon each stroke of the plunger will vary somewhat with the speed of rotation of the engine and pump, which is undesirable, but when the by-pass valve is completely closed, then the quantity of fuel delivered to the engine upon each stroke of the plunger is independent of the speed of the engine and pump, which is a highly desirable condition, particularly at full load. It is seen, therefore, that the fuel pump of the present invention is very suitable for delivering fuel to automobile engines, and it will also be appreciated that the present pump may be manufactured in quantity or mass production in a single size or a very few standard sizes, and any one of such pumps may, by turning the adjusting shaft 23, be quickly adjusted to the desired fuel delivery capacity required by the particular engine with which the pump is to be used, so that when the engine is operating at full load, the throttle valves of the pump may be entirely closed, notwithstanding reasonable variations in the fuel requirements of different engines to which indentical pumps are to be applied.

The illustrated form of the regulating shaft has the advantage that its angular movement is very large in relation to the plunger stroke caused thereby and therefore the necessary force for rotating the regulating shaft is small, and when operating by hand high fuel pressures can be created without any effort.

The operation of my invention has been referred to in what has been said above with regard to its construction, and it is believed that the same will be quite obvious therefrom and from the drawings.

Certain advantages of the invention have also been already herein referred to, and they as well as other advantages will be quite obvious to those skilled in the art to which the invention relates.

I do not limit myself to the particular details of construction set forth in the foregoing specification and illustrated in the accompanying drawings, as the same refer to and set forth only one embodiment of the invention, and it is obvious that the same may be modified, within the scope of the appended claims, without departing from the spirit and scope of the invention.

Having thus described the invention, what is claimed as new and desired to be secured by Letters Patent is as follows:

1. A fuel pump for internal combustion engines, comprising a cam shaft, a plurality of cams on said shaft, a plurality of cam followers, one associated with each cam and normally moved thereby during rotation of said cam shaft,

each of said cam followers having an opening therethrough, a plurality of pump plungers, one operated by each cam follower, a rotatable regulating shaft substantially parallel to said cam shaft and passing through said openings in all of said followers, and a plurality of eccentric means on said regulating shaft, one serving as a stop for each cam follower to limit motion of the cam follower in a direction toward its associated cam, so that by turning said regulating shaft, the strokes of said cam followers and consequently of said pump plungers may be varied.

2. A construction according to claim 1, further including means for varying the position of the portion of each follower which cooperates with said eccentric means, with relation to the position of the portion thereof which cooperates with its cam.

3. A fuel pump for internal combustion engines comprising a pump plunger, cam means for operating said plunger, tappet means operatively interposed between said cam means and said plunger, said tappet means including a cam follower part for contact with said cam means and a stud screw-threadedly engaged with and adjustable relatively to said cam follower part, one end of said stud actuating said plunger, and adjustable abutment means for contacting with the opposite end of said stud to limit movement of said tappet means in a direction toward said cam means.

4. A fuel pump for internal combustion engines comprising a pump plunger, cam means for operating said plunger, tappet means operatively interposed between said cam means and said plunger, said tappet means including a cam follower part for contact with said cam means and a stud screw-threadedly engaged with and adjustable relatively to said cam follower part, one end of said stud actuating said plunger, and adjustable abutment means including a shaft extending through said cam follower part and eccentric means thereon for contacting with the opposite end of said stud to limit movement of said tappet means in a direction toward said cam means.

5. A fuel pump for internal combustion engines comprising a plurality of pump plungers, an operating shaft having cam means thereon for operating said plungers, tappet means interposed between each plunger and said cam means, each tappet means including a cam follower part and a stud screw-threadedly engaged with and adjustable to different positions relatively to said cam follower part, one end of each stud actuating its associated plunger, an adjusting shaft substantially parallel to said operating shaft, and means on said adjusting shaft for contacting with the opposite end of each stud from that which actuates said plunger to form an abutment limiting movement of each tappet means in a direction toward said operating shaft, so that by movement of said adjusting shaft the range of movement of all of said tappet means and thereby the stroke of all of said plungers may be varied, the stroke of any one of said plungers being variable without affecting the stroke of any other plunger, by adjusting the position of the stud of the associated tappet means with respect to the cam follower part thereof.

6. A construction according to claim 1, further including means for varying the position of the portion of each follower which cooperates with said eccentric means, with relation to the position of the portion thereof which cooperates with its cam, said means for varying the position of a portion of each follower including a screw stud or other threaded element adjustably mounted on each cam follower and having one portion for contact with its associated pump plunger and another portion for contact with its associated eccentric means on said regulating shaft.

7. A fuel pump for a multi-cylinder internal combustion engine comprising, in combination, means forming a plurality of plunger chambers, a plurality of pump plungers, one movable within each chamber, for delivering fuel to the respective cylinders of the internal combustion engine, means including tappets for reciprocating said plungers within their respective chambers, means including an adjustable part on each tappet for varying the stroke of each plunger individually so that all of the plungers may be adjusted to deliver equal amounts of fuel, means forming a by-pass duct leading from each plunger chamber, throttle valve means associated with each by-pass duct and having a substantially constant position during substantially the entire delivery stroke of its associated pump plunger for controlling the rate of by-passing of fuel through its associated by-pass duct during the delivery stroke of its associated plunger by the extent of opening of said throttle valve means rather than by the time of opening thereof, means for adjusting said extent of opening of said throttle valve means to vary said rate of by-passing, and stroke varying mechanism including movable means cooperating with said adjustable parts of the respective tappets and effective upon movement to vary concomitantly the strokes of all of said pump plungers to make the maximum quantities of fuel delivered by the plungers equal to the maximum fuel requirements of the particular internal combustion engine with which the pump is used, so that said pump may be operated with said throttle valve means entirely closed when the associated engine is running under full load.

8. A fuel pump for a multi-cylinder internal combustion engine comprising, in combination, means forming a plurality of plunger chambers, a plurality of pump plungers, one movable within each chamber, for delivering fuel to the respective cylinders of the internal combustion engine, means including tappets for reciprocating said plungers within their respective chambers, means including an adjustable part on each tappet for varying the stroke of each plunger individually so that all of the plungers may be adjusted to deliver equal amounts of fuel, means forming a by-pass duct leading from each plunger chamber, combined check valve and throttle valve means associated with each by-pass duct, said valve means including a valve member arranged to open in a direction away from pressure within its associated plunger chamber, adjustable means determining the extent to which said valve member may open, and resilient means constantly tending to close said valve member, so that the pressure within each plunger chamber and associated by-pass duct during the delivery stroke of the associated plunger will open the associated valve member substantially at the beginning of the delivery stroke against the action of said resilient means and to the extent, if any, permitted by the position of said adjustable means and will maintain said valve member in open position, if any opening is permitted by said adjustable means, until substantially the end of said delivery stroke, and stroke varying mechanism including movable means cooperating with

said adjustable parts of the respective tappets and effective upon movement to vary concomitantly the strokes of all of said pump plungers to make the maximum quantities of fuel delivered by the plungers equal to the maximum fuel requirements of the particular internal combustion engine with which the pump is used, so that when the associated engine is running under full load said adjustable means may be positioned to hold all of the valve members entirely closed during said delivery strokes of the plungers.

9. A fuel pump for internal combustion engines, comprising a cam shaft, a plurality of cams on said shaft, a plurality of cam followers, one associated with each cam and normally moved thereby during rotation of said cam shaft, each of said cam followers having an opening therethrough, a plurality of pump plungers, one operated by each cam follower, and a regulating member passing through said openings in all of said followers, said regulating member having cam portions serving as stops to limit motion of said cam followers in a direction toward said cam shaft and being so mounted with respect to said followers that by moving said regulating member the strokes of all of said cam followers and consequently of said pump plungers may be adjusted together.

ANTON BRUNNER.