US006655422B2

(12) **United States Patent**
Shock

(10) **Patent No.: US 6,655,422 B2**
(45) **Date of Patent: Dec. 2, 2003**

(54) **COMPUTER CONTROLLED APPARATUS AND METHOD OF FILLING CYLINDERS WITH GAS**

(75) Inventor: **Robert F. Shock**, Meriden, CT (US)

(73) Assignee: **ATNL, Inc.**, Wilmington, DE (US)

(*) Notice: Subject to any disclaimer, the term of this patent is extended or adjusted under 35 U.S.C. 154(b) by 0 days.

(21) Appl. No.: **10/223,051**

(22) Filed: **Aug. 16, 2002**

(65) **Prior Publication Data**

US 2003/0070724 A1 Apr. 17, 2003

Related U.S. Application Data

(60) Provisional application No. 60/324,876, filed on Sep. 26, 2001.

(51) **Int. Cl.**[7] **B65B 31/00**

(52) **U.S. Cl.** **141/83**; 141/1; 141/3; 141/4; 141/9; 141/18; 141/100; 141/104; 141/94; 141/128; 141/197

(58) **Field of Search** 141/1–4, 9, 18, 141/21, 83, 100, 104, 105, 128, 192, 197

(56) **References Cited**

U.S. PATENT DOCUMENTS

4,657,055	A	*	4/1987	Poulsen 141/83
4,989,160	A		1/1991	Garrett et al.
5,329,463	A		7/1994	Sierk et al.
5,440,477	A		8/1995	Rohrberg et al.
5,508,947	A		4/1996	Sierk et al.
5,513,678	A		5/1996	Schultz
5,657,254	A		8/1997	Sierk et al.
5,826,632	A		10/1998	Mické et al.
5,868,176	A		2/1999	Barajas et al.
5,881,779	A	*	3/1999	Kountz et al. 141/83
5,913,344	A		6/1999	Wronski et al.
5,992,478	A		11/1999	Micke et al.
6,135,170	A		10/2000	Lee et al.
6,152,192	A		11/2000	Klotz et al.
6,182,713	B1		2/2001	Deck et al.
6,591,872	B2	*	7/2003	Wagenheim 141/2
2003/0051766	A1	*	3/2003	Nguyen 141/18

* cited by examiner

Primary Examiner—J. Casimer Jacyna
(74) *Attorney, Agent, or Firm*—RatnerPrestia

(57) **ABSTRACT**

A method of filling a cylinder with a target weight of a gas. The method includes successively measuring weight of the cylinder at periodic time intervals to obtain successive actual weights of the cylinder; opening a first valve and filling the cylinder with the gas at a high flow rate; and closing the first valve after reaching a predetermined weight difference between the target weight and an actual weight. After closing the first valve, the method opens a second valve and fills the cylinder with the gas at a low flow rate. After opening the second valve to fill the cylinder with the gas, the method adjustably controls, via an adjustable valve, the flow of gas to the cylinder. The method differences each successively measured actual weight from the target weight of the gas to obtain multiple first difference values. The method also differences adjacently measured actual weights to obtain multiple second difference values. The flow of gas to the cylinder is adjustably controlled based on each first difference value and a corresponding second difference value.

20 Claims, 33 Drawing Sheets

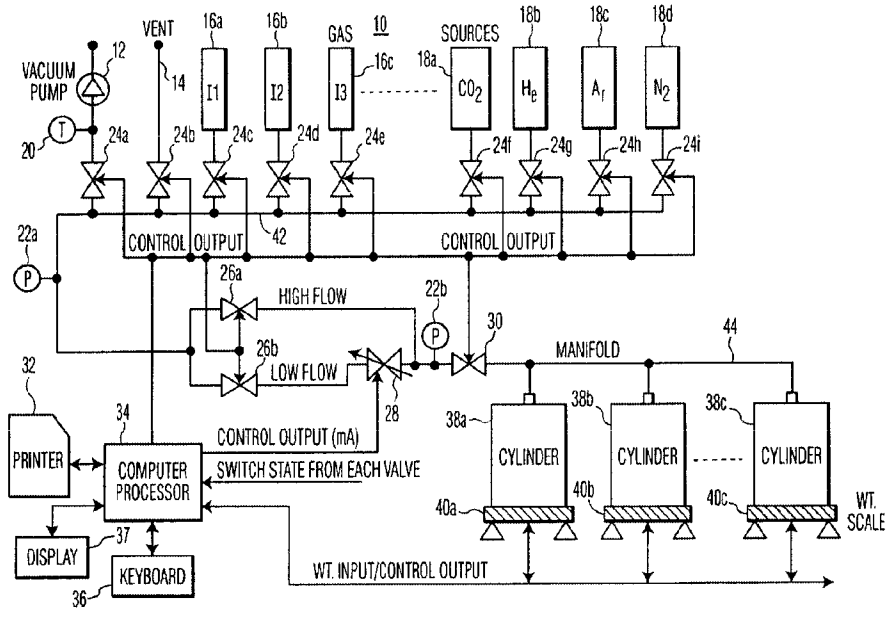

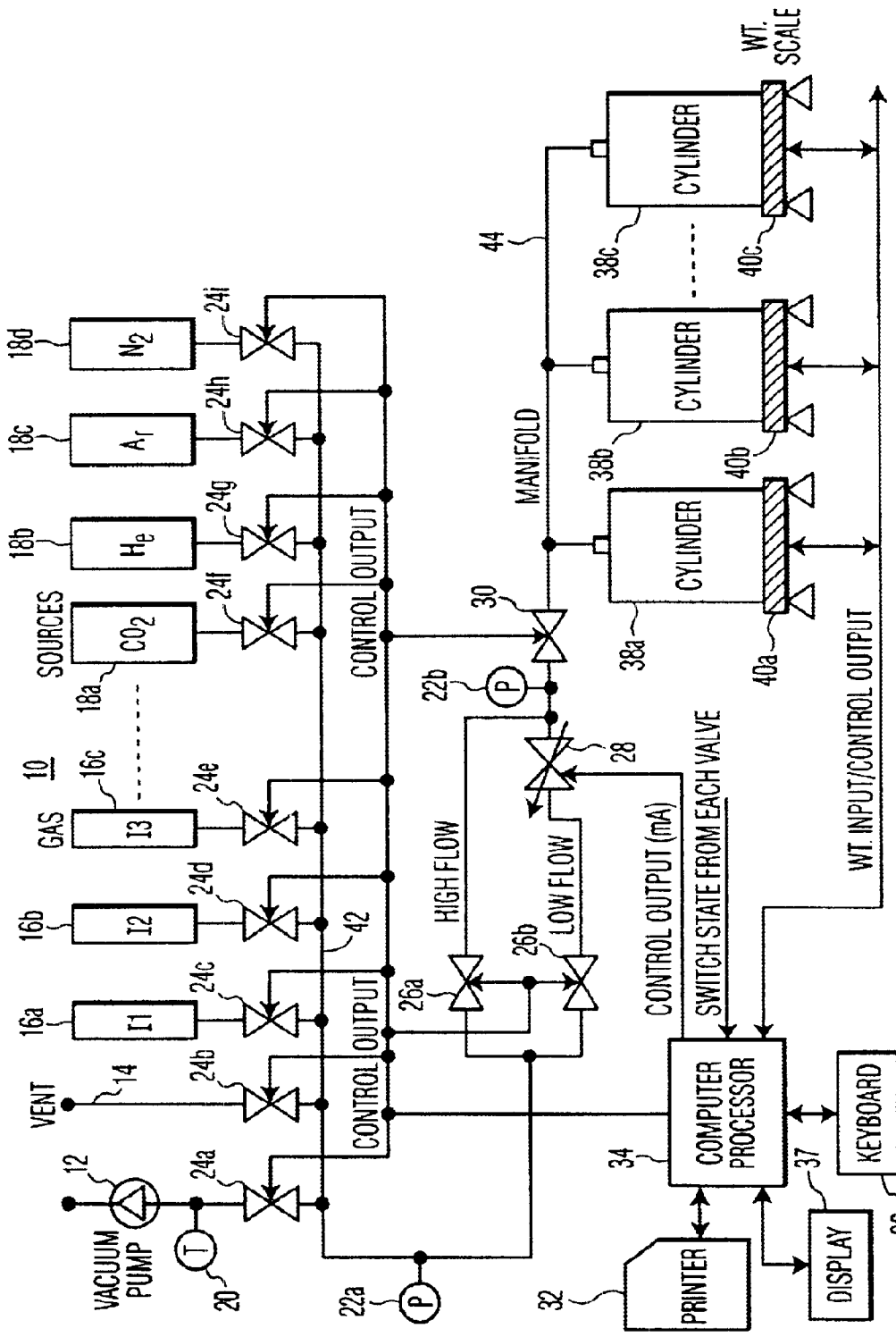
10
VACUUM PUMP
12
T
20
VENT
14
24a
24b
24c
24d
24e
24f
24g
24h
24i
16a
I1
16b
I2
16c
I3
GAS
SOURCES
18a
CO_2
18b
H_e
18c
A_r
18d
N_2
42
CONTROL OUTPUT
CONTROL OUTPUT
22a
P
22b
P
26a
26b
HIGH FLOW
LOW FLOW
28
30
MANIFOLD
44
CYLINDER
CYLINDER
CYLINDER
38a
38b
38c
40a
40b
40c
WT. SCALE
CONTROL OUTPUT (mA)
SWITCH STATE FROM EACH VALVE
WT. INPUT/CONTROL OUTPUT
COMPUTER PROCESSOR
34
PRINTER
32
DISPLAY
37
KEYBOARD
36

FIG. 1

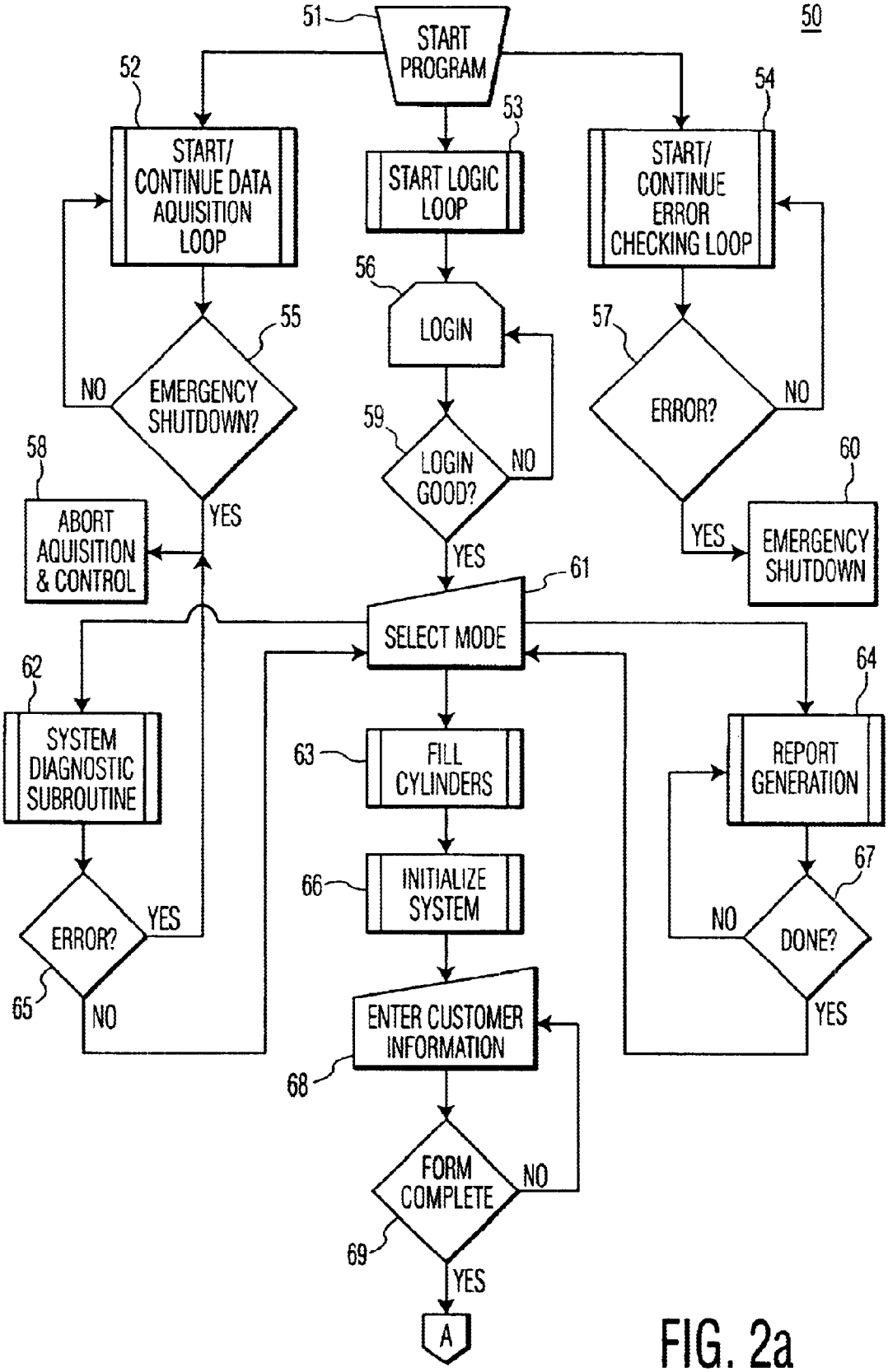
50
51
START PROGRAM
52
START/ CONTINUE DATA AQUISITION LOOP
53
START LOGIC LOOP
54
START/ CONTINUE ERROR CHECKING LOOP
55
EMERGENCY SHUTDOWN?
NO
YES
56
LOGIN
57
ERROR?
NO
YES
58
ABORT AQUISITION & CONTROL
59
LOGIN GOOD?
NO
YES
60
EMERGENCY SHUTDOWN
61
SELECT MODE
62
SYSTEM DIAGNOSTIC SUBROUTINE
63
FILL CYLINDERS
64
REPORT GENERATION
65
ERROR?
YES
NO
66
INITIALIZE SYSTEM
67
DONE?
NO
YES
68
ENTER CUSTOMER INFORMATION
69
FORM COMPLETE
NO
YES
A

FIG. 2a

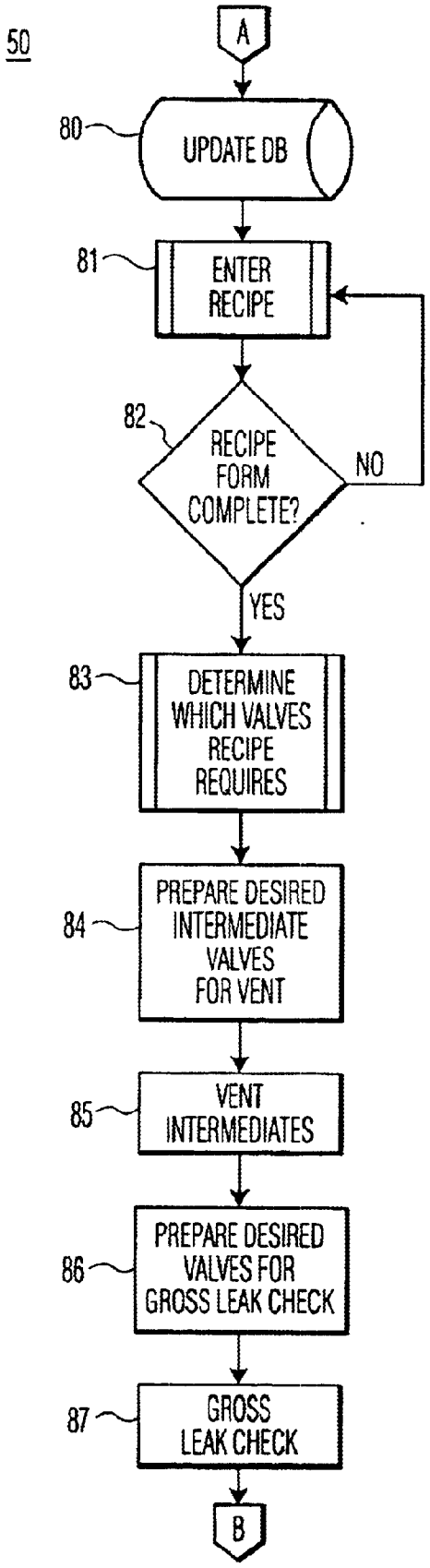
50
A
80
UPDATE DB
81
ENTER RECIPE
82
RECIPE FORM COMPLETE?
NO
YES
83
DETERMINE WHICH VALVES RECIPE REQUIRES
84
PREPARE DESIRED INTERMEDIATE VALVES FOR VENT
85
VENT INTERMEDIATES
86
PREPARE DESIRED VALVES FOR GROSS LEAK CHECK
87
GROSS LEAK CHECK
B

FIG. 2b

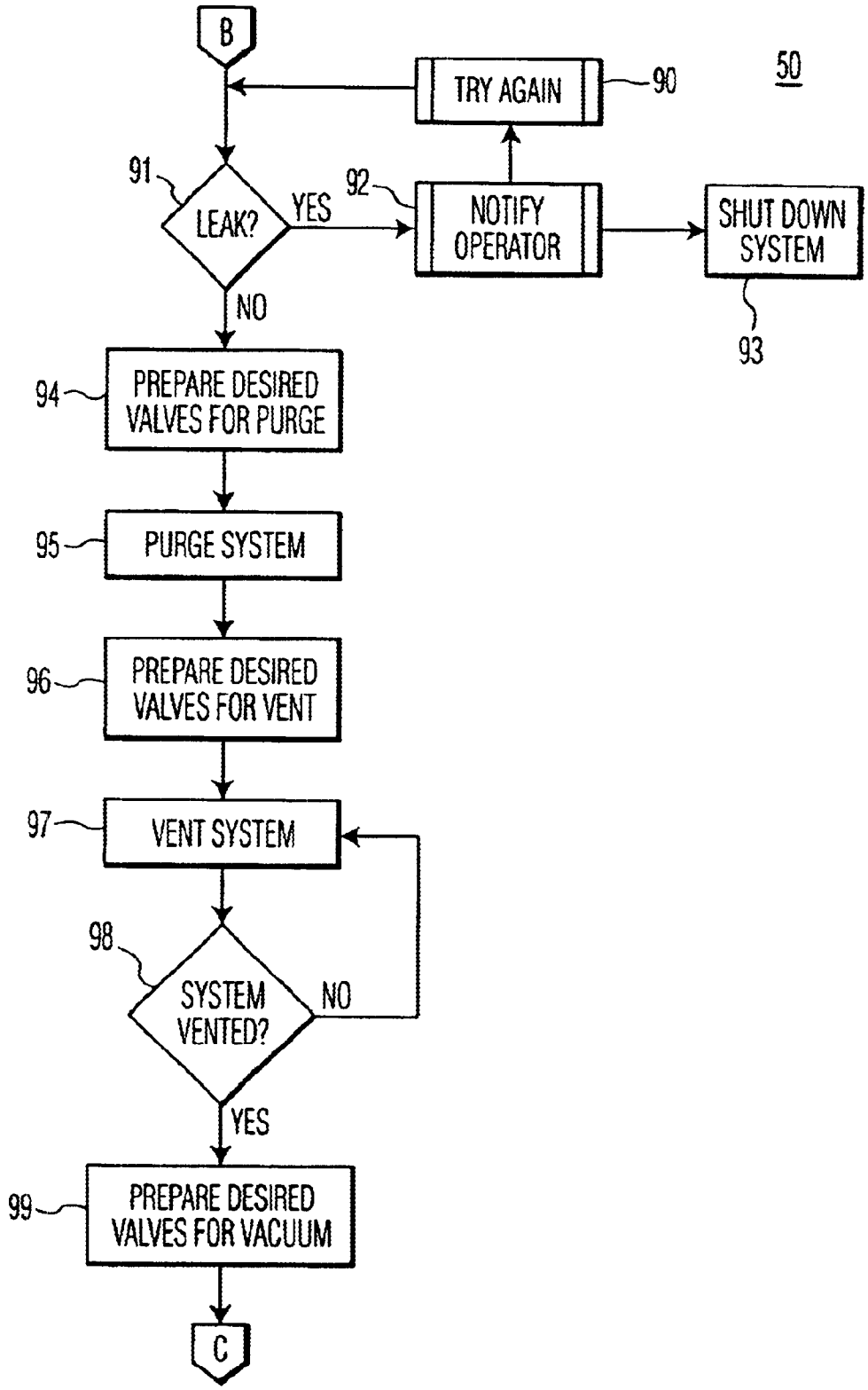
B
TRY AGAIN
90
50
91
LEAK?
YES
92
NOTIFY OPERATOR
SHUT DOWN SYSTEM
93
NO
94
PREPARE DESIRED VALVES FOR PURGE
95
PURGE SYSTEM
96
PREPARE DESIRED VALVES FOR VENT
97
VENT SYSTEM
98
SYSTEM VENTED?
NO
YES
99
PREPARE DESIRED VALVES FOR VACUUM
C

FIG. 2c

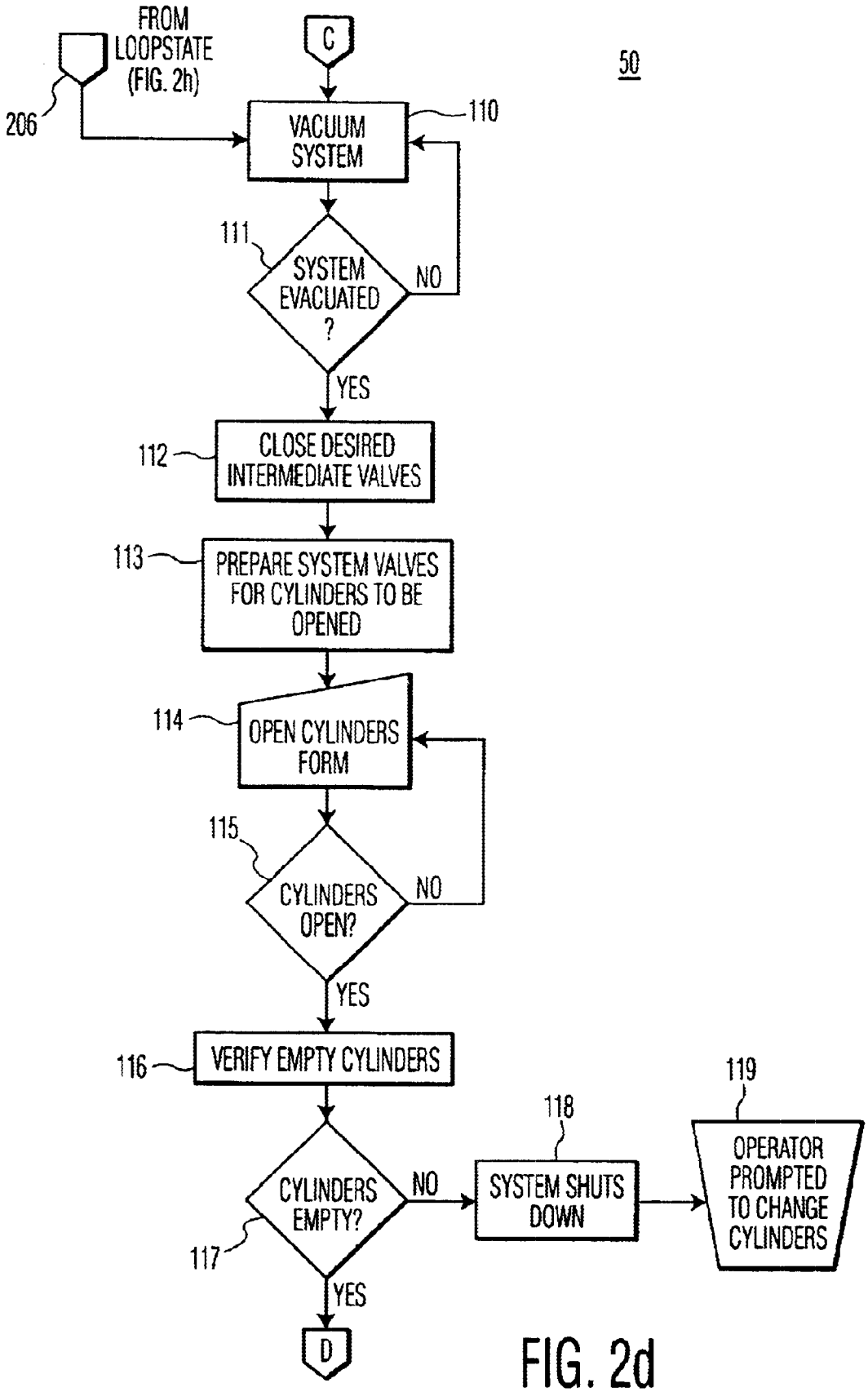
FROM LOOPSTATE (FIG. 2h)
206
C
50
VACUUM SYSTEM
110
111
SYSTEM EVACUATED ?
NO
YES
112
CLOSE DESIRED INTERMEDIATE VALVES
113
PREPARE SYSTEM VALVES FOR CYLINDERS TO BE OPENED
114
OPEN CYLINDERS FORM
115
CYLINDERS OPEN?
NO
YES
116
VERIFY EMPTY CYLINDERS
118
119
CYLINDERS EMPTY?
NO
SYSTEM SHUTS DOWN
OPERATOR PROMPTED TO CHANGE CYLINDERS
117
YES
D

FIG. 2d

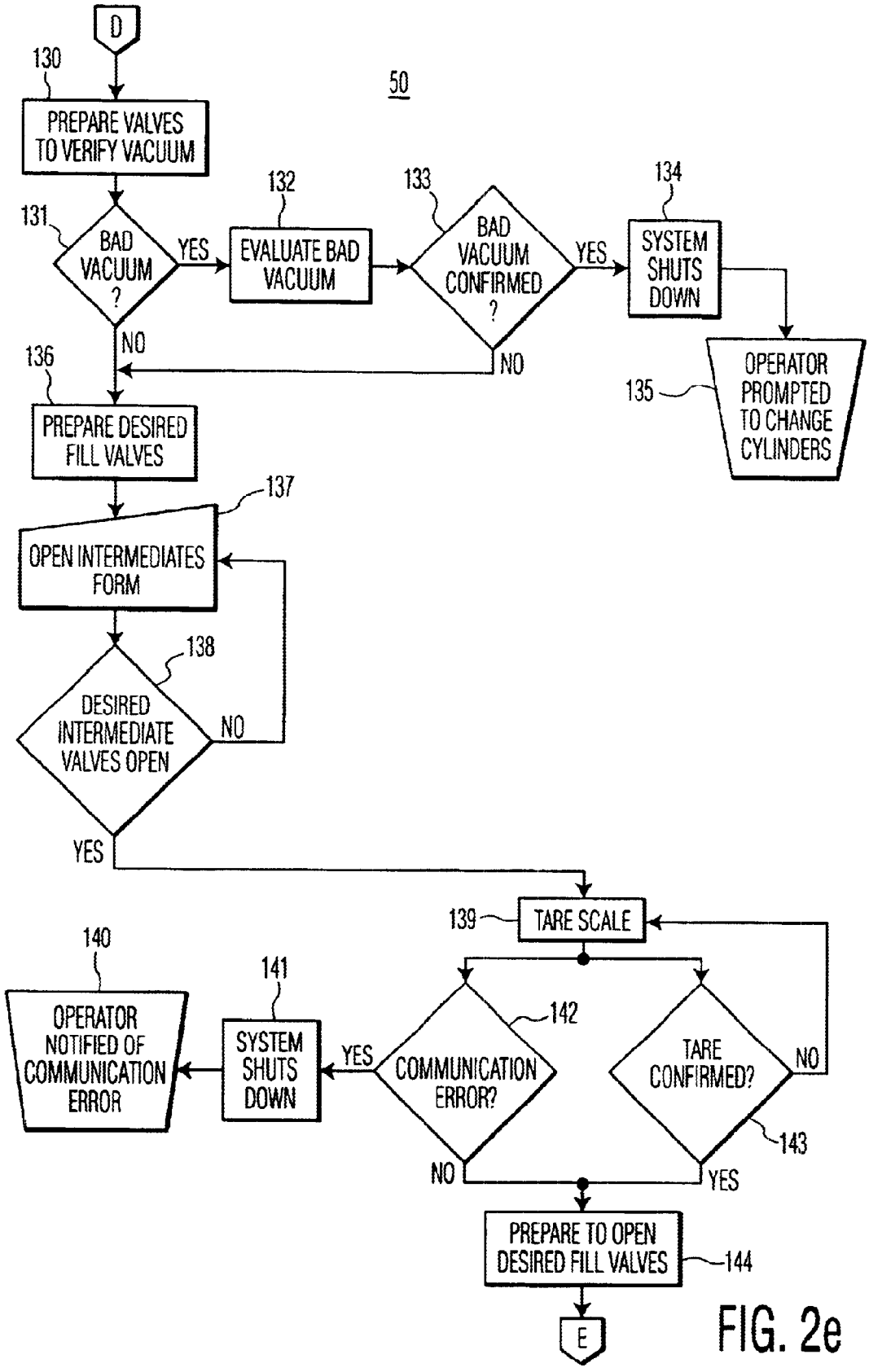
D
130
50
PREPARE VALVES TO VERIFY VACUUM
131
BAD VACUUM ?
YES
132
EVALUATE BAD VACUUM
133
BAD VACUUM CONFIRMED ?
YES
134
SYSTEM SHUTS DOWN
135
OPERATOR PROMPTED TO CHANGE CYLINDERS
NO
NO
136
PREPARE DESIRED FILL VALVES
137
OPEN INTERMEDIATES FORM
138
DESIRED INTERMEDIATE VALVES OPEN
NO
YES
139
TARE SCALE
140
OPERATOR NOTIFIED OF COMMUNICATION ERROR
141
SYSTEM SHUTS DOWN
YES
142
COMMUNICATION ERROR?
TARE CONFIRMED?
NO
143
NO
YES
PREPARE TO OPEN DESIRED FILL VALVES
144
E

FIG. 2e

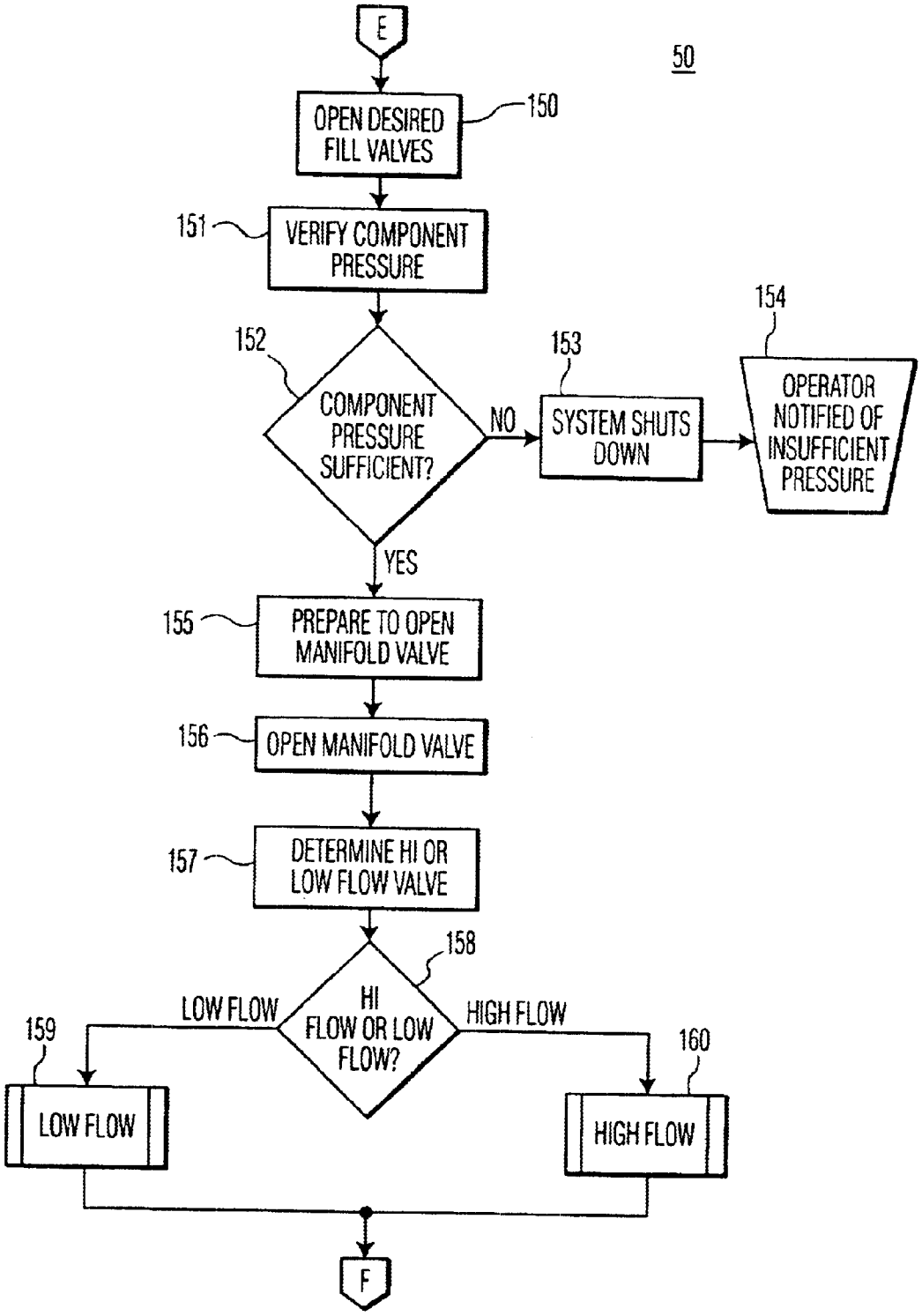
E
50
OPEN DESIRED FILL VALVES
150
151
VERIFY COMPONENT PRESSURE
152
COMPONENT PRESSURE SUFFICIENT?
NO
153
SYSTEM SHUTS DOWN
154
OPERATOR NOTIFIED OF INSUFFICIENT PRESSURE
YES
155
PREPARE TO OPEN MANIFOLD VALVE
156
OPEN MANIFOLD VALVE
157
DETERMINE HI OR LOW FLOW VALVE
158
HI FLOW OR LOW FLOW?
LOW FLOW
HIGH FLOW
159
LOW FLOW
160
HIGH FLOW
F

FIG. 2f

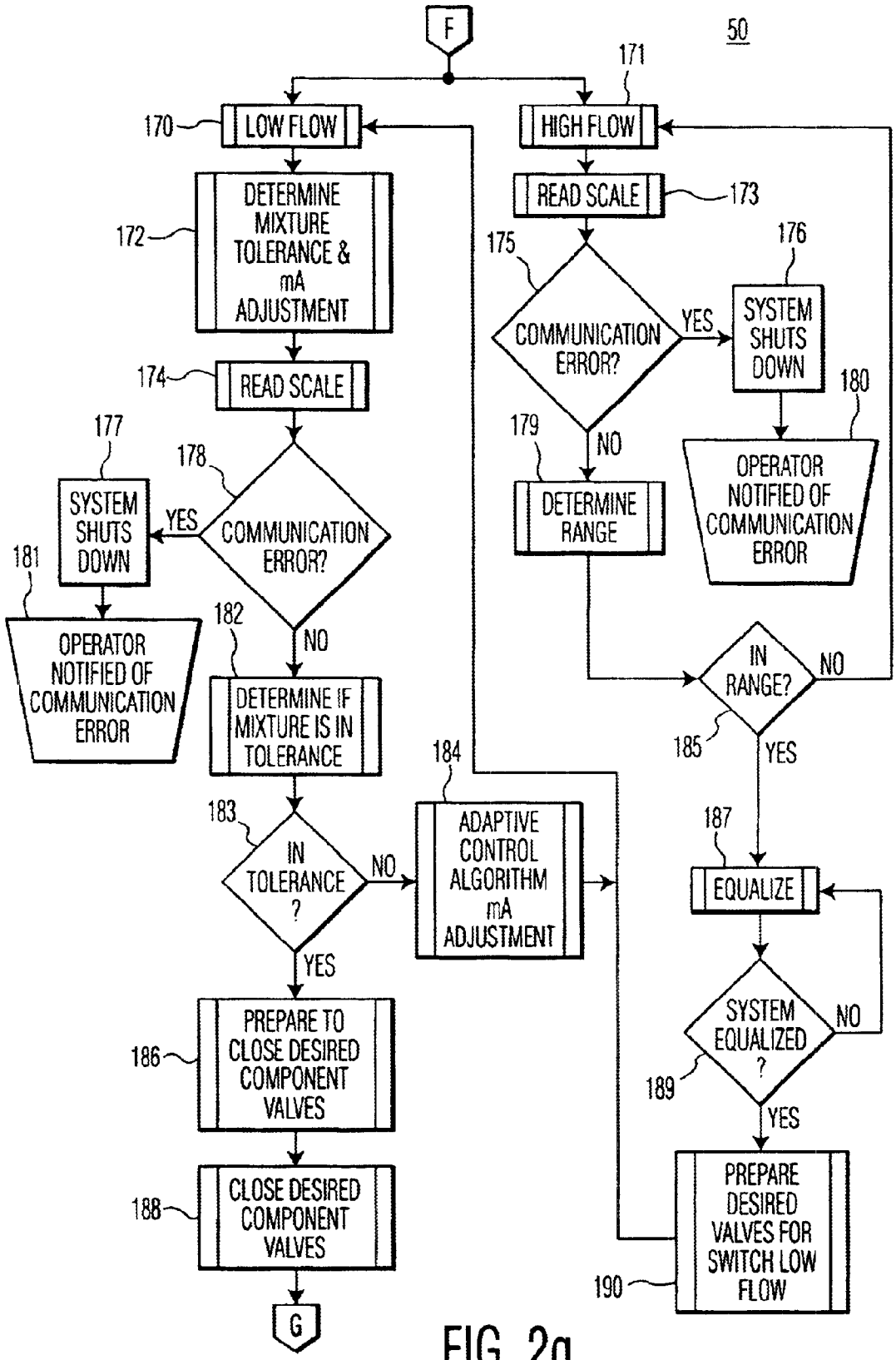
F
50
171
170
LOW FLOW
HIGH FLOW
DETERMINE MIXTURE TOLERANCE & mA ADJUSTMENT
172
READ SCALE
173
175
COMMUNICATION ERROR?
YES
176
SYSTEM SHUTS DOWN
180
174
READ SCALE
177
178
SYSTEM SHUTS DOWN
YES
COMMUNICATION ERROR?
179
NO
DETERMINE RANGE
OPERATOR NOTIFIED OF COMMUNICATION ERROR
181
OPERATOR NOTIFIED OF COMMUNICATION ERROR
182
NO
IN RANGE?
NO
DETERMINE IF MIXTURE IS IN TOLERANCE
185
YES
184
183
IN TOLERANCE ?
NO
ADAPTIVE CONTROL ALGORITHM mA ADJUSTMENT
187
EQUALIZE
YES
SYSTEM EQUALIZED ?
NO
189
YES
PREPARE TO CLOSE DESIRED COMPONENT VALVES
186
PREPARE DESIRED VALVES FOR SWITCH LOW FLOW
190
CLOSE DESIRED COMPONENT VALVES
188
G

FIG. 2g

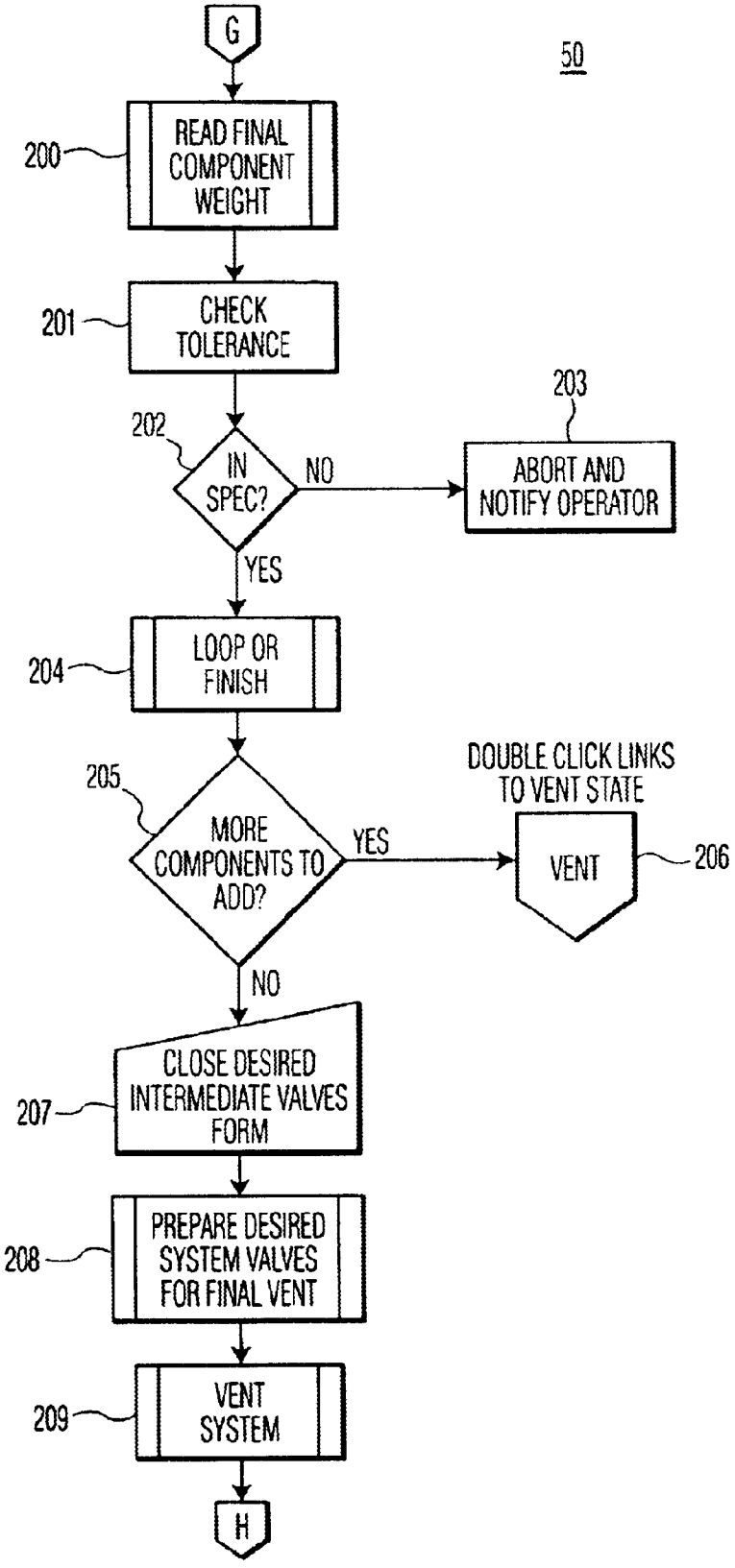
G
50
200
READ FINAL COMPONENT WEIGHT
201
CHECK TOLERANCE
202
IN SPEC?
NO
203
ABORT AND NOTIFY OPERATOR
YES
204
LOOP OR FINISH
205
MORE COMPONENTS TO ADD?
YES
DOUBLE CLICK LINKS TO VENT STATE
VENT
206
NO
207
CLOSE DESIRED INTERMEDIATE VALVES FORM
208
PREPARE DESIRED SYSTEM VALVES FOR FINAL VENT
209
VENT SYSTEM
H

FIG. 2h

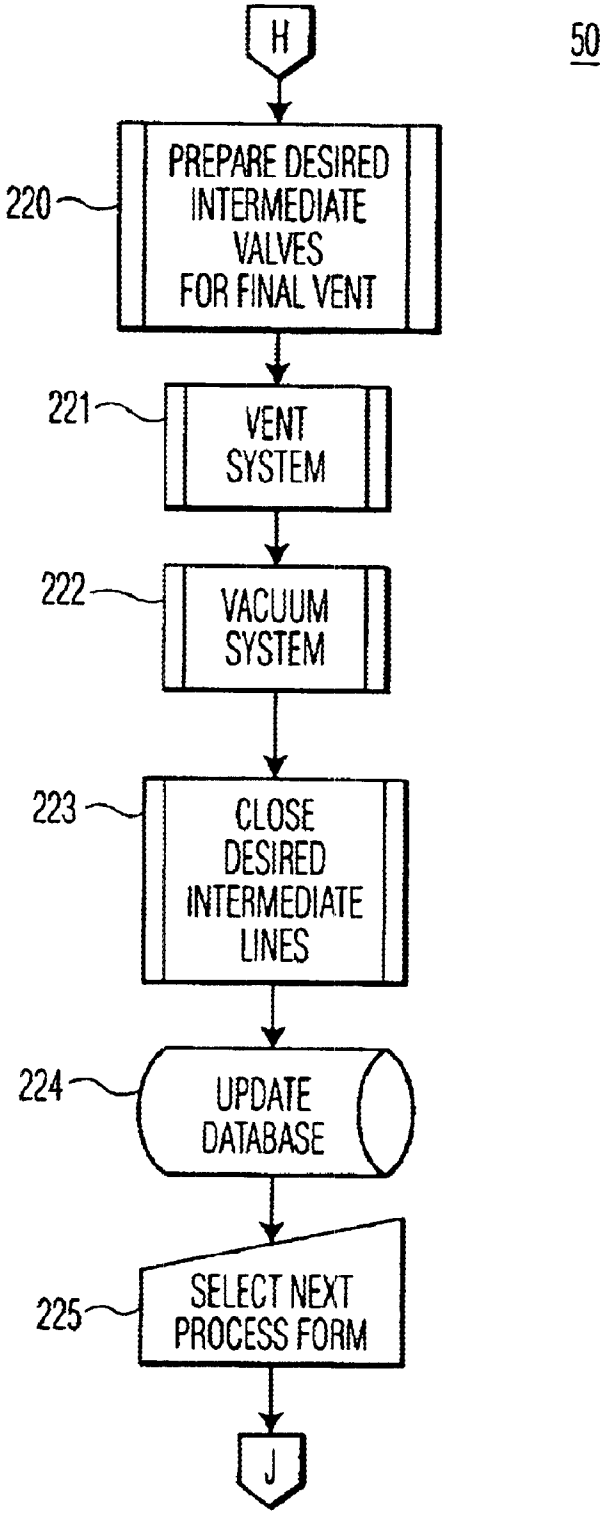
H
50
220
PREPARE DESIRED INTERMEDIATE VALVES FOR FINAL VENT
221
VENT SYSTEM
222
VACUUM SYSTEM
223
CLOSE DESIRED INTERMEDIATE LINES
224
UPDATE DATABASE
225
SELECT NEXT PROCESS FORM
J

FIG. 2i

300

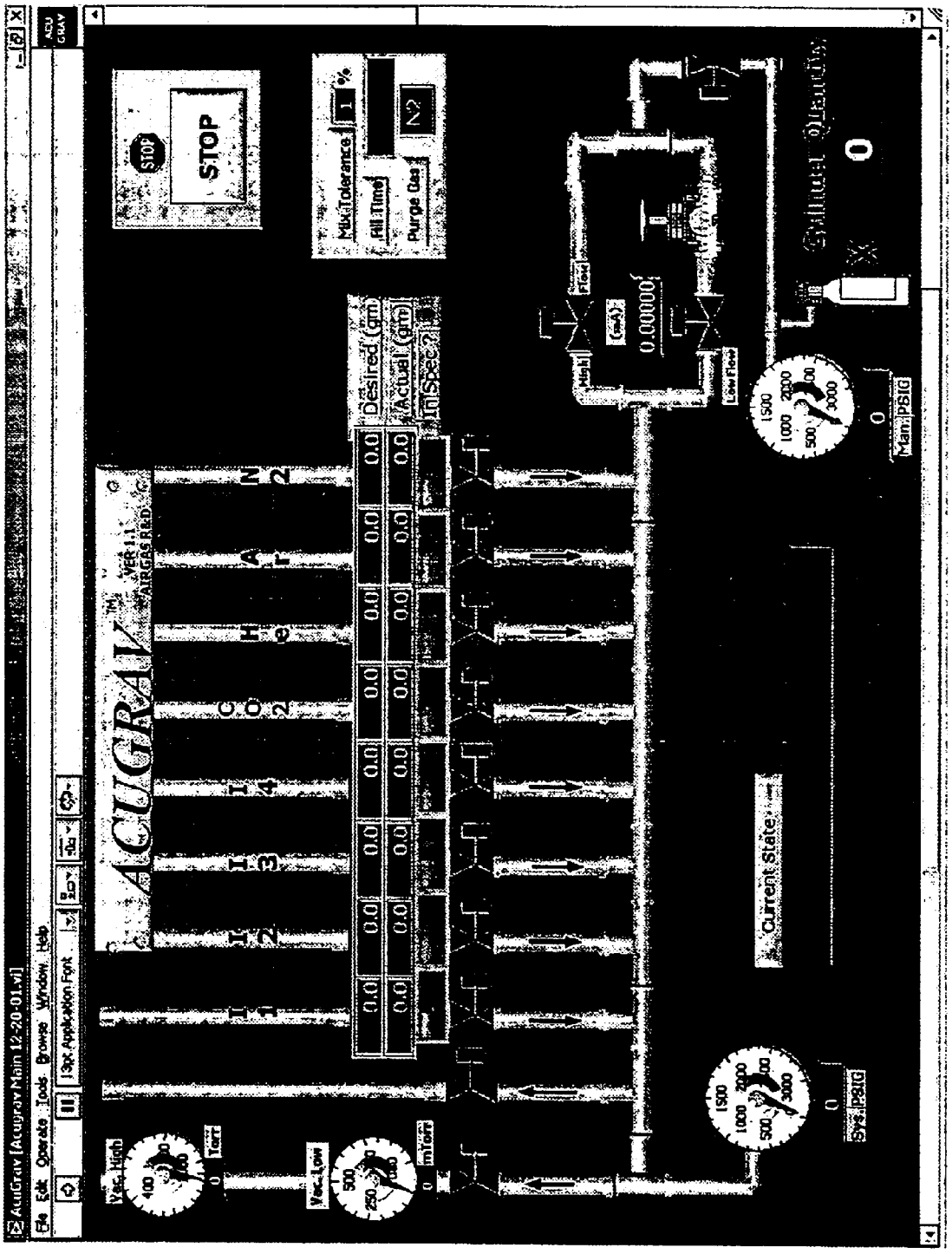
ACUGRAV
STOP
Mix Tolerance
Fill Time
Purge Gas
Desired (gm)
Actual (gm)
In Spec ?
Current State
Sys. PSIG
Man. PSIG
Vac. High
Vac. Low
Low Flow
High
Flow

FIG. 3

400

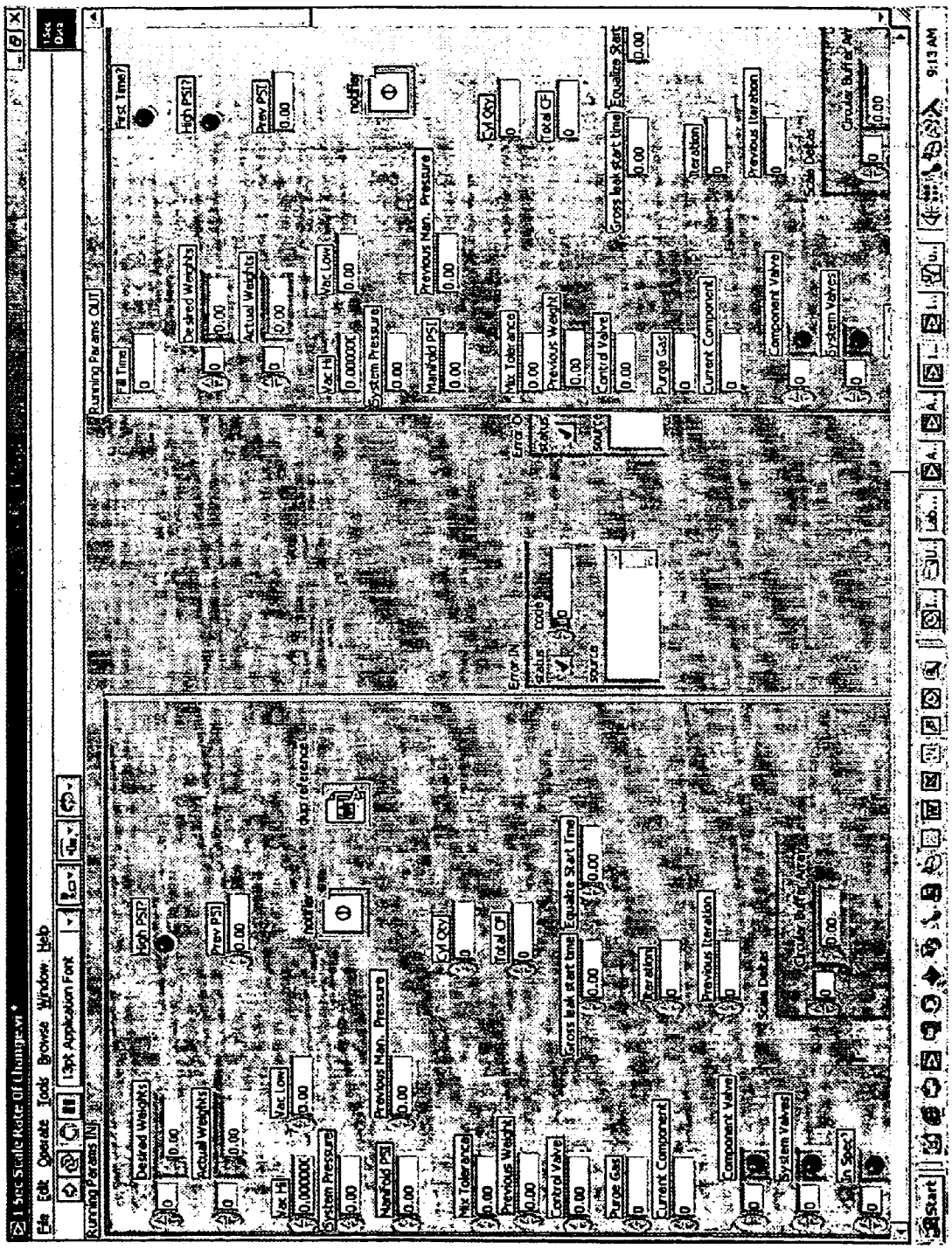

FIG. 4

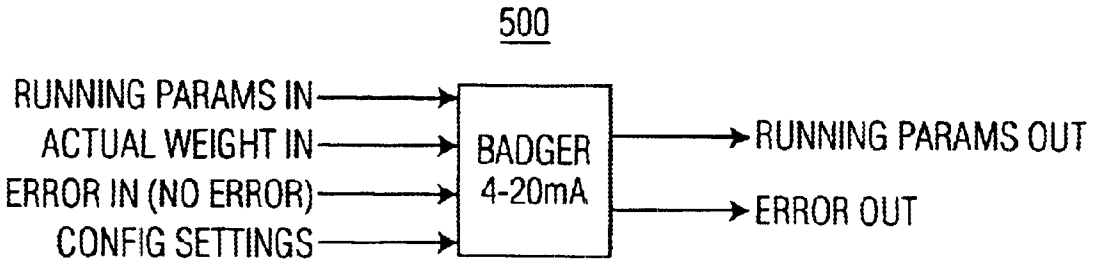
500
RUNNING PARAMS IN
ACTUAL WEIGHT IN
ERROR IN (NO ERROR)
CONFIG SETTINGS
BADGER
4-20mA
RUNNING PARAMS OUT
ERROR OUT

FIG. 5a

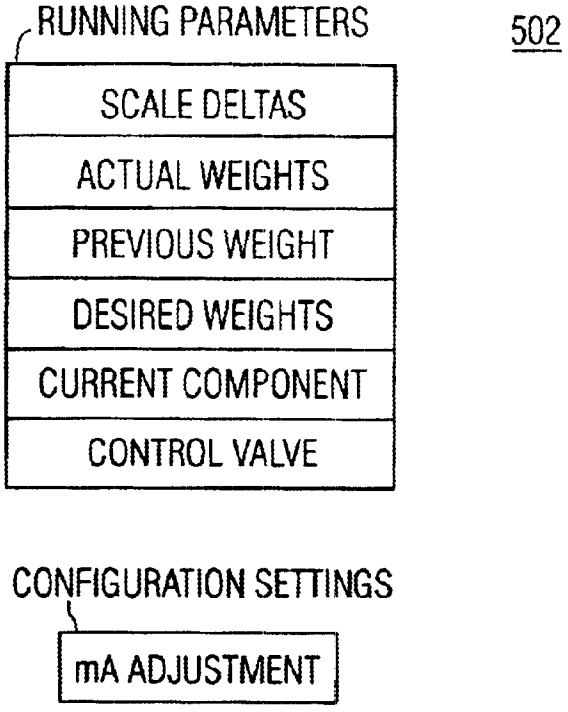
RUNNING PARAMETERS
502
SCALE DELTAS
ACTUAL WEIGHTS
PREVIOUS WEIGHT
DESIRED WEIGHTS
CURRENT COMPONENT
CONTROL VALVE
CONFIGURATION SETTINGS
mA ADJUSTMENT

FIG. 5b

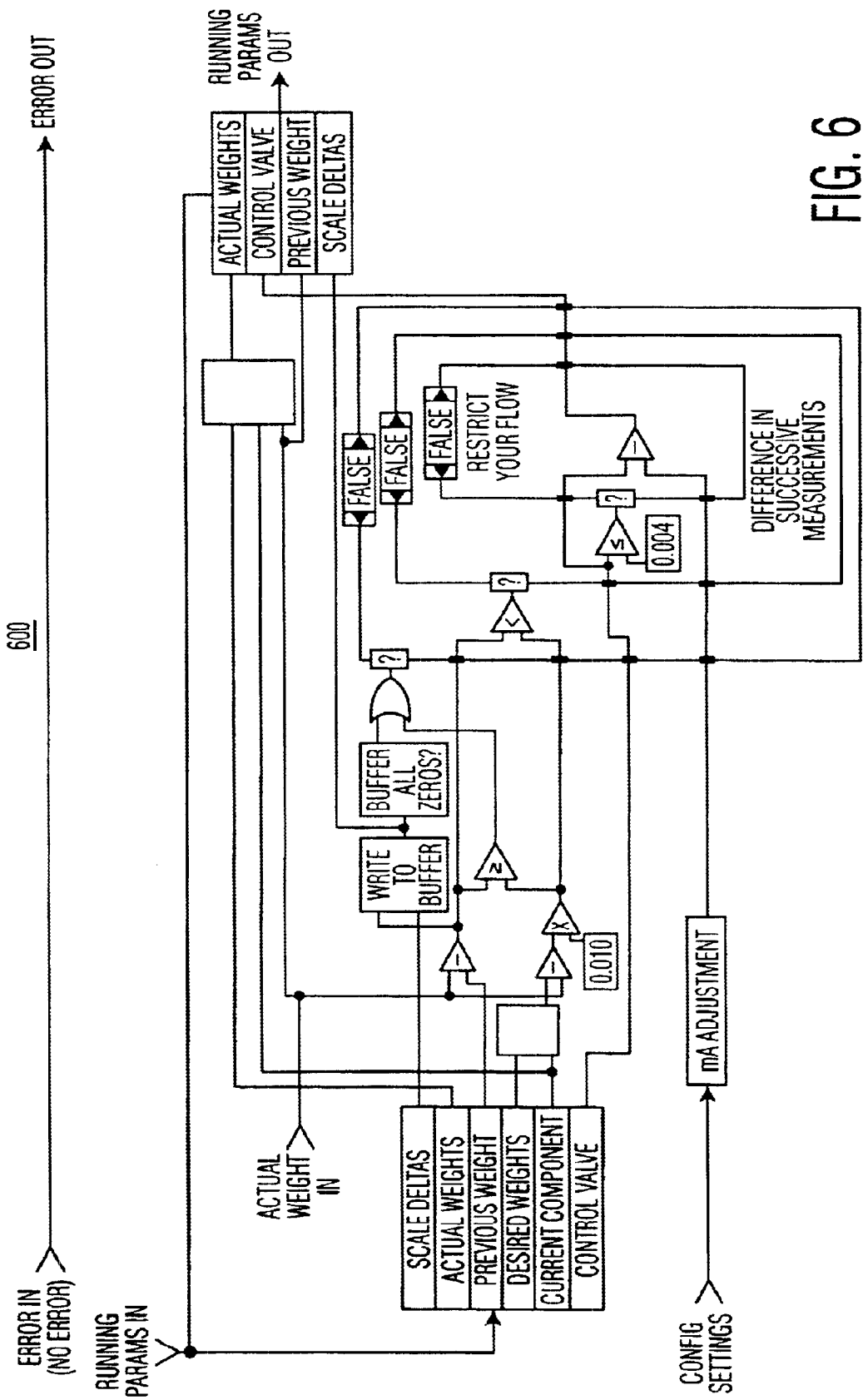
600
ERROR OUT
RUNNING PARAMS OUT
ACTUAL WEIGHTS
CONTROL VALVE
PREVIOUS WEIGHT
SCALE DELTAS
FALSE
FALSE
FALSE
RESTRICT YOUR FLOW
DIFFERENCE IN SUCCESSIVE MEASUREMENTS
0.004
BUFFER ALL ZEROS?
WRITE TO BUFFER
0.010
mA ADJUSTMENT
ACTUAL WEIGHT IN
SCALE DELTAS
ACTUAL WEIGHTS
PREVIOUS WEIGHT
DESIRED WEIGHTS
CURRENT COMPONENT
CONTROL VALVE
ERROR IN (NO ERROR)
RUNNING PARAMS IN
CONFIG SETTINGS

FIG. 6

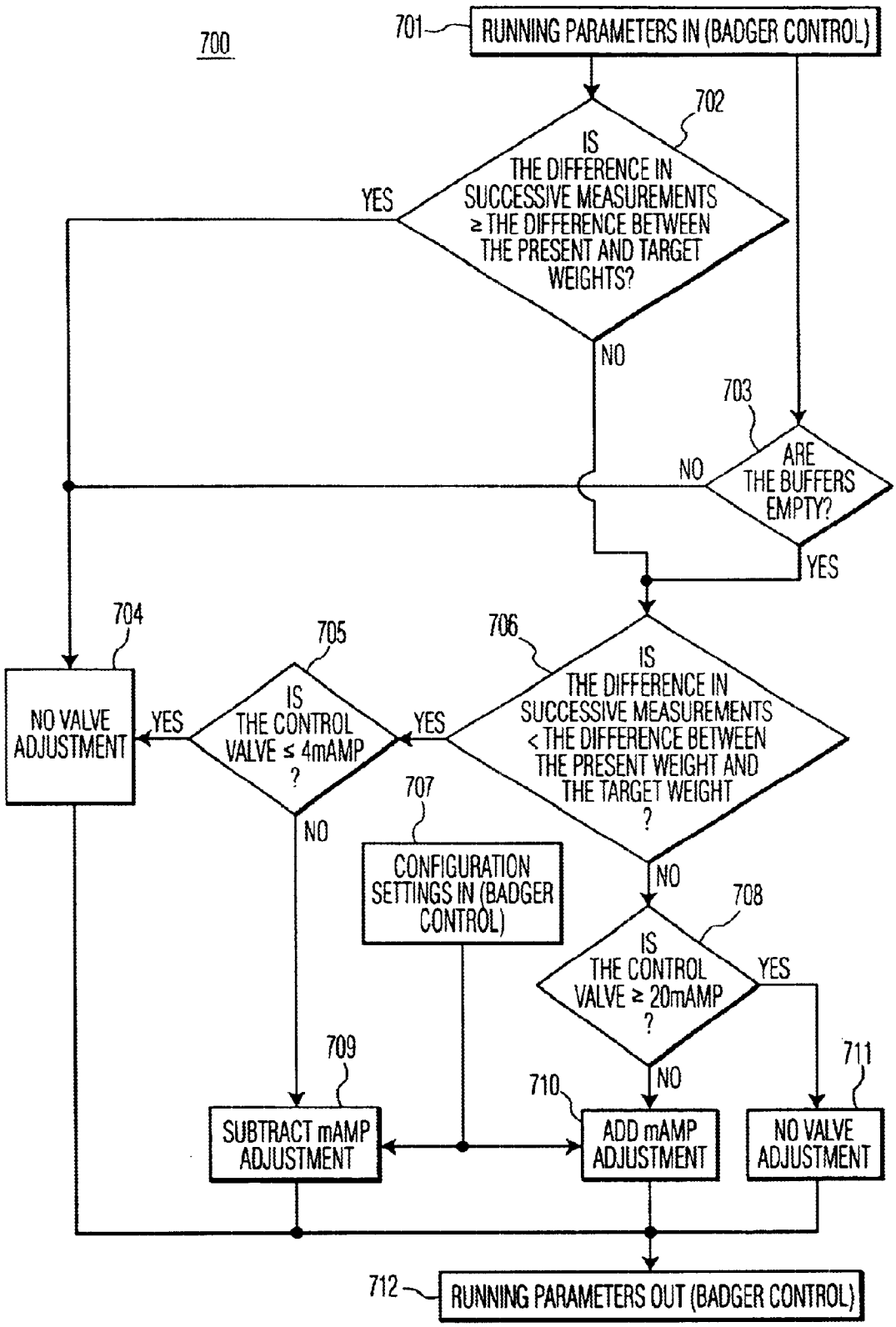
700
701
RUNNING PARAMETERS IN (BADGER CONTROL)
702
IS THE DIFFERENCE IN SUCCESSIVE MEASUREMENTS ≥ THE DIFFERENCE BETWEEN THE PRESENT AND TARGET WEIGHTS?
YES
NO
703
ARE THE BUFFERS EMPTY?
NO
YES
704
NO VALVE ADJUSTMENT
705
IS THE CONTROL VALVE ≤ 4mAMP ?
YES
706
IS THE DIFFERENCE IN SUCCESSIVE MEASUREMENTS < THE DIFFERENCE BETWEEN THE PRESENT WEIGHT AND THE TARGET WEIGHT ?
YES
NO
707
CONFIGURATION SETTINGS IN (BADGER CONTROL)
708
IS THE CONTROL VALVE ≥ 20mAMP ?
YES
NO
709
SUBTRACT mAMP ADJUSTMENT
710
ADD mAMP ADJUSTMENT
711
NO VALVE ADJUSTMENT
712
RUNNING PARAMETERS OUT (BADGER CONTROL)

FIG. 7

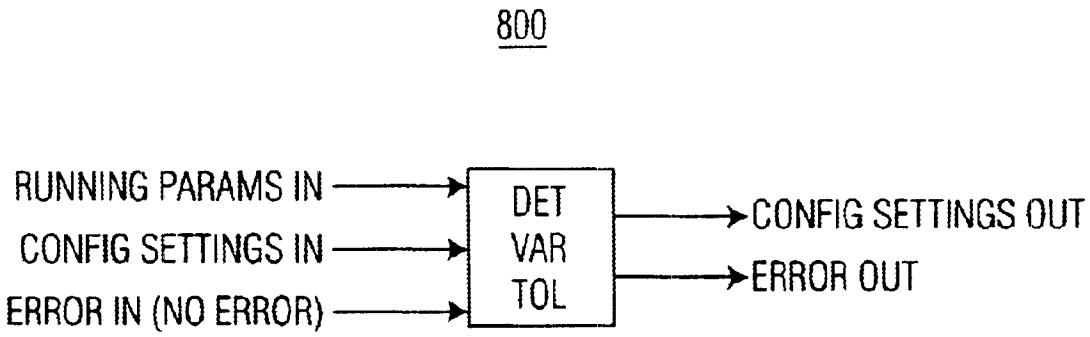
800
RUNNING PARAMS IN
CONFIG SETTINGS IN
ERROR IN (NO ERROR)
DET
VAR
TOL
CONFIG SETTINGS OUT
ERROR OUT

FIG. 8

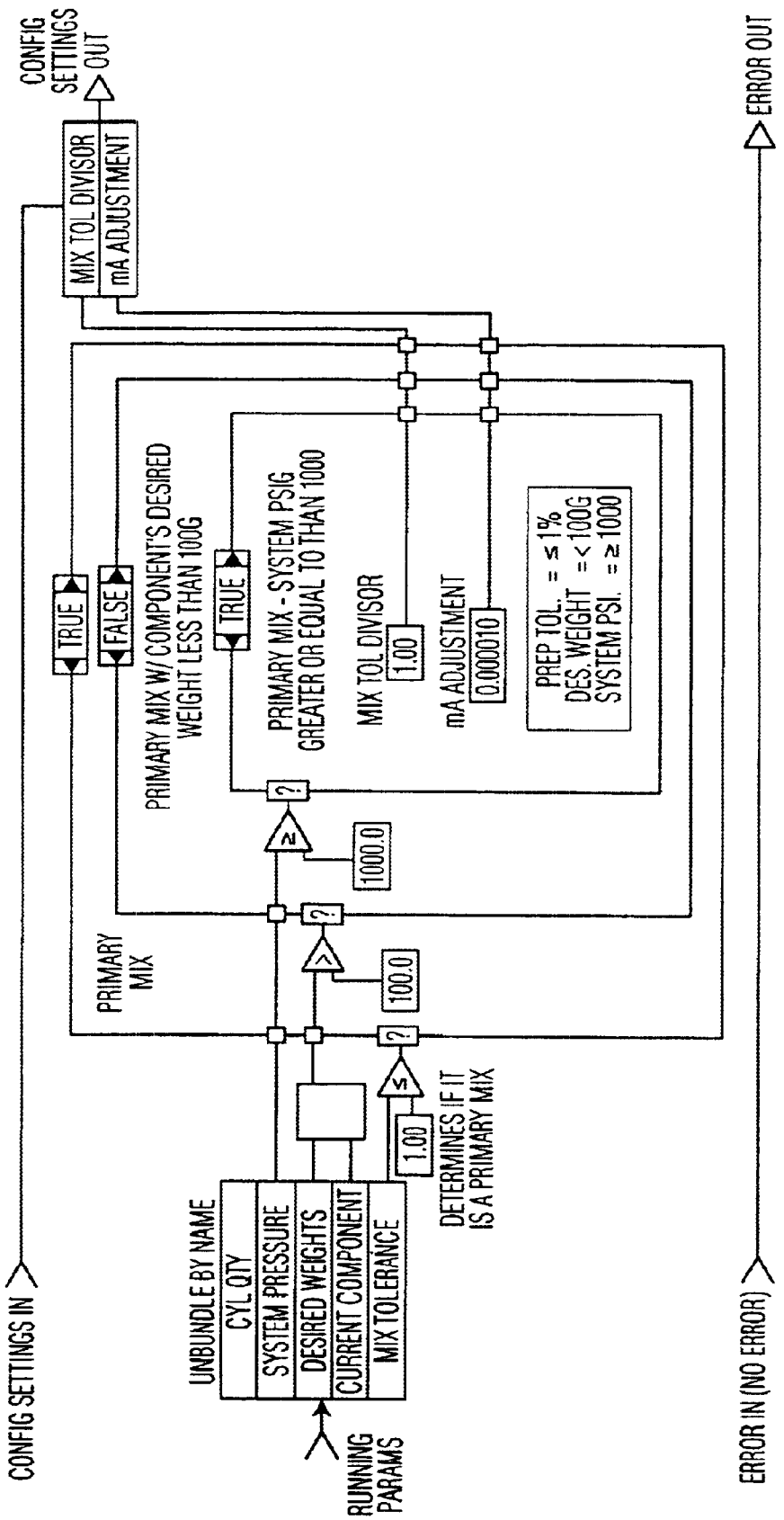
900
CONFIG SETTINGS IN
CONFIG SETTINGS OUT
MIX TOL DIVISOR
mA ADJUSTMENT
ERROR OUT
ERROR IN (NO ERROR)
RUNNING PARAMS
UNBUNDLE BY NAME
CYL QTY
SYSTEM PRESSURE
DESIRED WEIGHTS
CURRENT COMPONENT
MIX TOLERANCE
DETERMINES IF IT IS A PRIMARY MIX
1.00
100.0
1000.0
PRIMARY MIX
PRIMARY MIX W/ COMPONENT'S DESIRED WEIGHT LESS THAN 100G
PRIMARY MIX - SYSTEM PSIG GREATER OR EQUAL TO THAN 1000
MIX TOL DIVISOR
1.00
mA ADJUSTMENT
0.000010
PREP TOL. = ≤ 1%
DES. WEIGHT = < 100G
SYSTEM PSI. = ≥ 1000
TRUE
FALSE
TRUE

FIG. 9

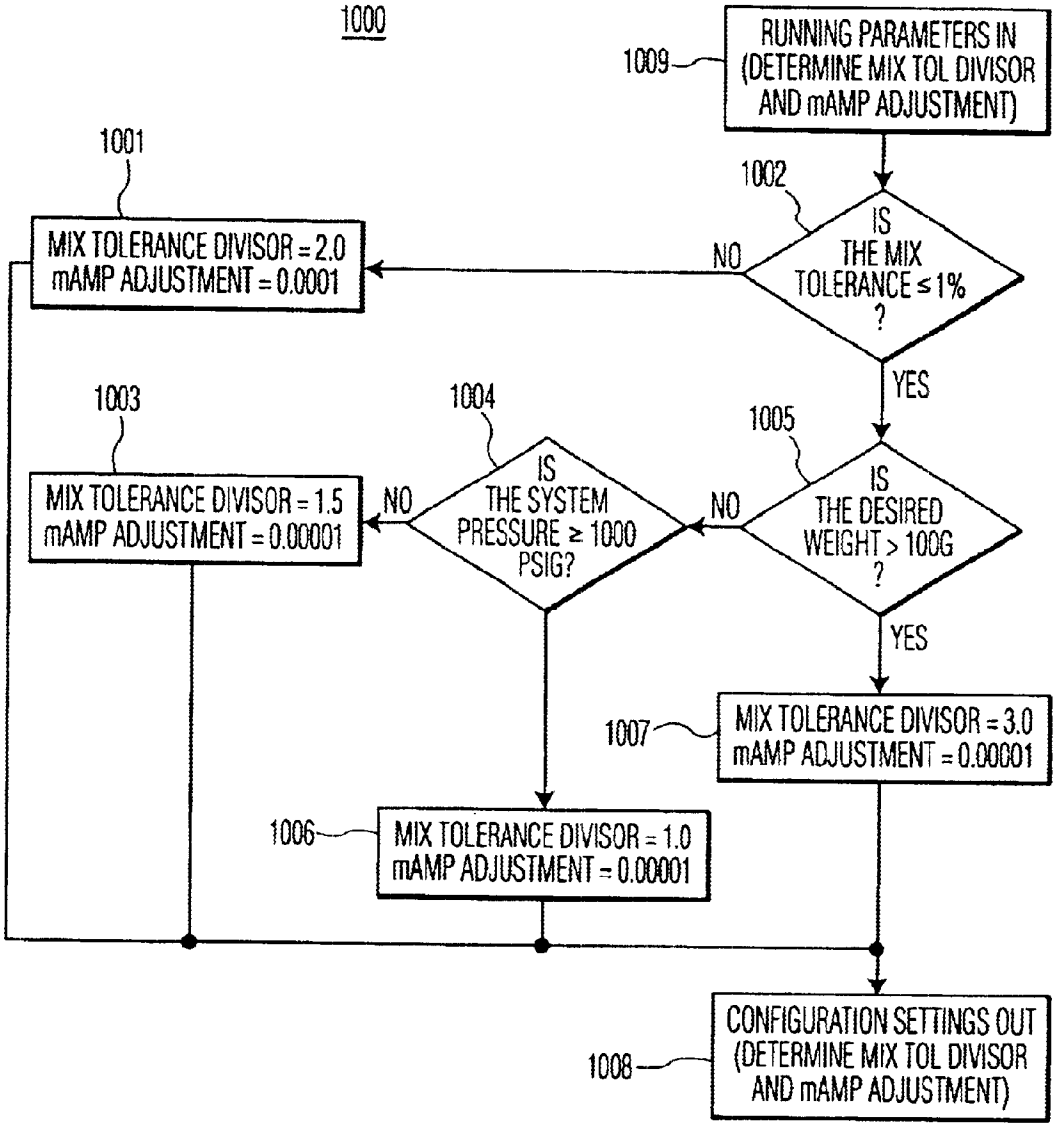
1000
1009
RUNNING PARAMETERS IN (DETERMINE MIX TOL DIVISOR AND mAMP ADJUSTMENT)
1001
MIX TOLERANCE DIVISOR = 2.0 mAMP ADJUSTMENT = 0.0001
1002
IS THE MIX TOLERANCE ≤ 1% ?
NO
YES
1003
MIX TOLERANCE DIVISOR = 1.5 mAMP ADJUSTMENT = 0.00001
1004
IS THE SYSTEM PRESSURE ≥ 1000 PSIG?
NO
1005
IS THE DESIRED WEIGHT > 100G ?
NO
YES
1007
MIX TOLERANCE DIVISOR = 3.0 mAMP ADJUSTMENT = 0.00001
1006
MIX TOLERANCE DIVISOR = 1.0 mAMP ADJUSTMENT = 0.00001
1008
CONFIGURATION SETTINGS OUT (DETERMINE MIX TOL DIVISOR AND mAMP ADJUSTMENT)

FIG. 10

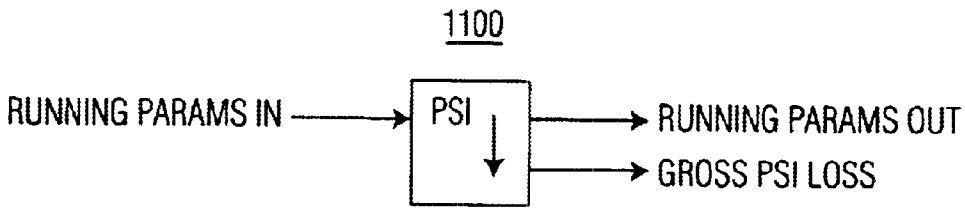
1100
RUNNING PARAMS IN
PSI
RUNNING PARAMS OUT
GROSS PSI LOSS

FIG. 11

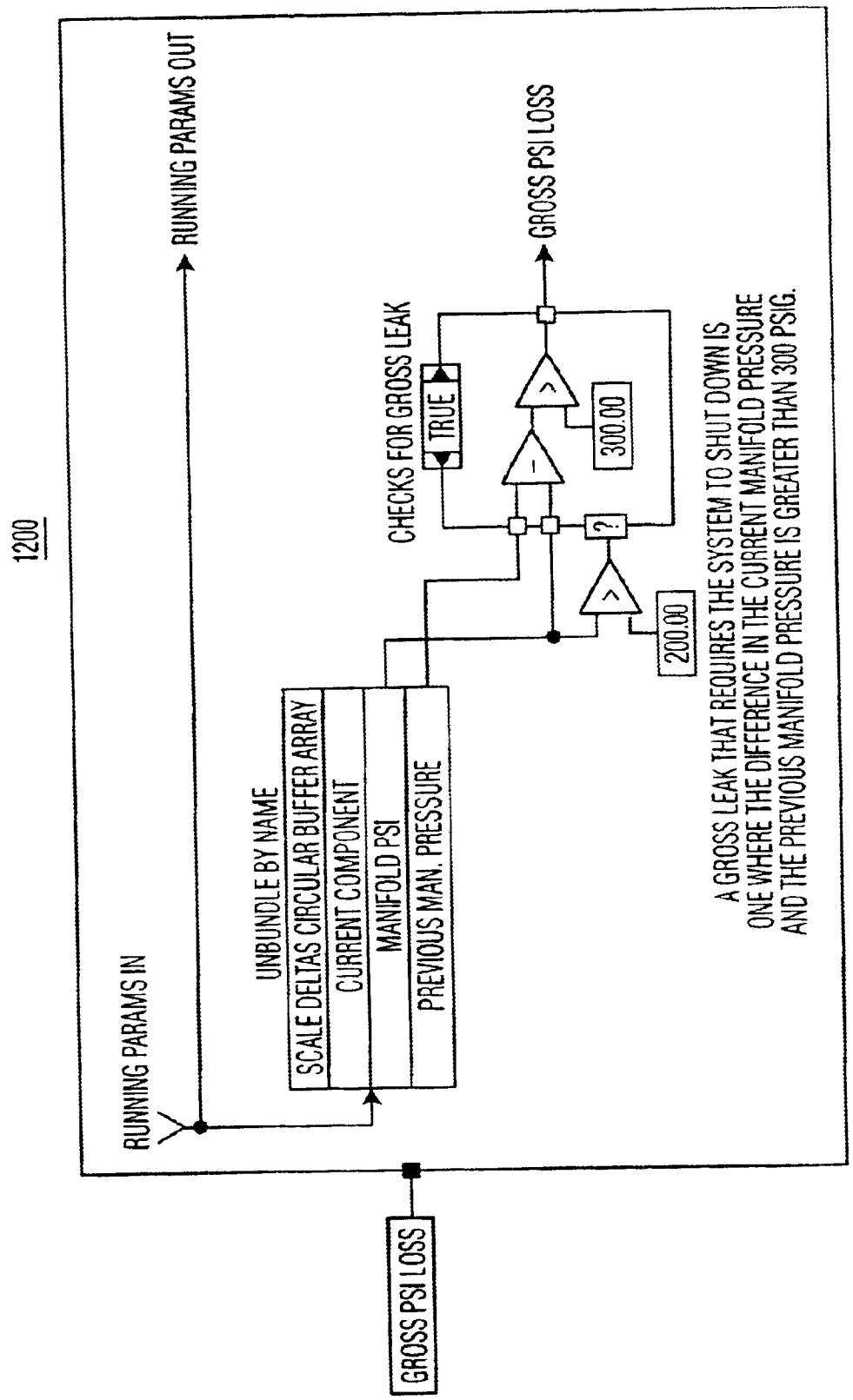
1200
RUNNING PARAMS IN
RUNNING PARAMS OUT
UNBUNDLE BY NAME
SCALE DELTAS CIRCULAR BUFFER ARRAY
CURRENT COMPONENT
MANIFOLD PSI
PREVIOUS MAN. PRESSURE
CHECKS FOR GROSS LEAK
TRUE
GROSS PSI LOSS
300.00
200.00
A GROSS LEAK THAT REQUIRES THE SYSTEM TO SHUT DOWN IS ONE WHERE THE DIFFERENCE IN THE CURRENT MANIFOLD PRESSURE AND THE PREVIOUS MANIFOLD PRESSURE IS GREATER THAN 300 PSIG.
GROSS PSI LOSS

FIG. 12

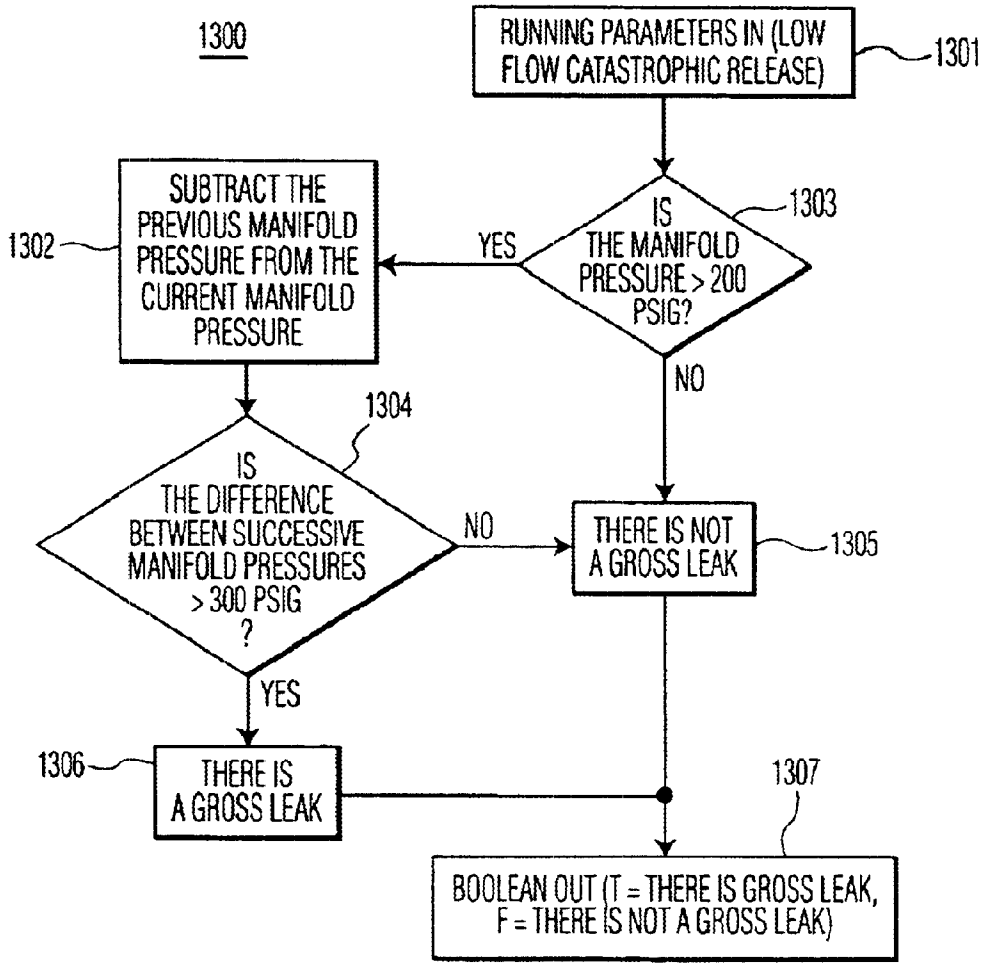
1300
RUNNING PARAMETERS IN (LOW FLOW CATASTROPHIC RELEASE)
1301
IS THE MANIFOLD PRESSURE > 200 PSIG?
1303
YES
SUBTRACT THE PREVIOUS MANIFOLD PRESSURE FROM THE CURRENT MANIFOLD PRESSURE
1302
NO
IS THE DIFFERENCE BETWEEN SUCCESSIVE MANIFOLD PRESSURES > 300 PSIG ?
1304
NO
THERE IS NOT A GROSS LEAK
1305
YES
THERE IS A GROSS LEAK
1306
1307
BOOLEAN OUT (T = THERE IS GROSS LEAK, F = THERE IS NOT A GROSS LEAK)

FIG. 13

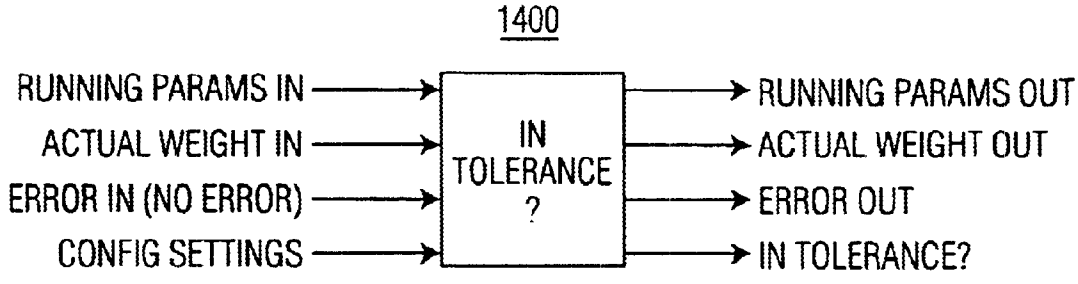
1400
RUNNING PARAMS IN
ACTUAL WEIGHT IN
ERROR IN (NO ERROR)
CONFIG SETTINGS
IN TOLERANCE ?
RUNNING PARAMS OUT
ACTUAL WEIGHT OUT
ERROR OUT
IN TOLERANCE?

FIG. 14

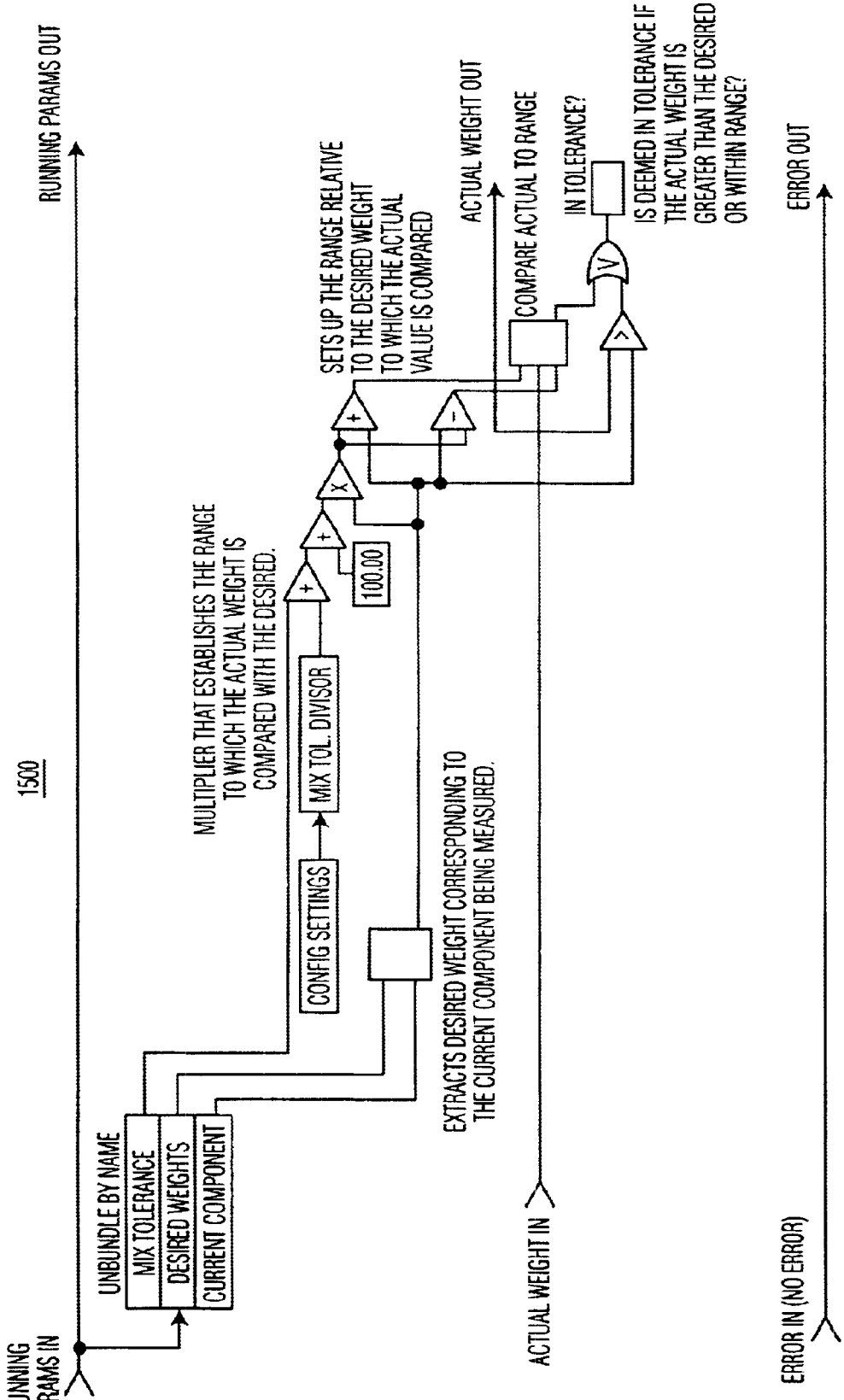
1500
RUNNING PARAMS IN
RUNNING PARAMS OUT
UNBUNDLE BY NAME
MIX TOLERANCE
DESIRED WEIGHTS
CURRENT COMPONENT
CONFIG SETTINGS
MIX TOL. DIVISOR
100.00
MULTIPLIER THAT ESTABLISHES THE RANGE TO WHICH THE ACTUAL WEIGHT IS COMPARED WITH THE DESIRED.
EXTRACTS DESIRED WEIGHT CORRESPONDING TO THE CURRENT COMPONENT BEING MEASURED.
SETS UP THE RANGE RELATIVE TO THE DESIRED WEIGHT TO WHICH THE ACTUAL VALUE IS COMPARED
ACTUAL WEIGHT IN
ACTUAL WEIGHT OUT
COMPARE ACTUAL TO RANGE
IN TOLERANCE?
IS DEEMED IN TOLERANCE IF THE ACTUAL WEIGHT IS GREATER THAN THE DESIRED OR WITHIN RANGE?
ERROR IN (NO ERROR)
ERROR OUT

FIG. 15

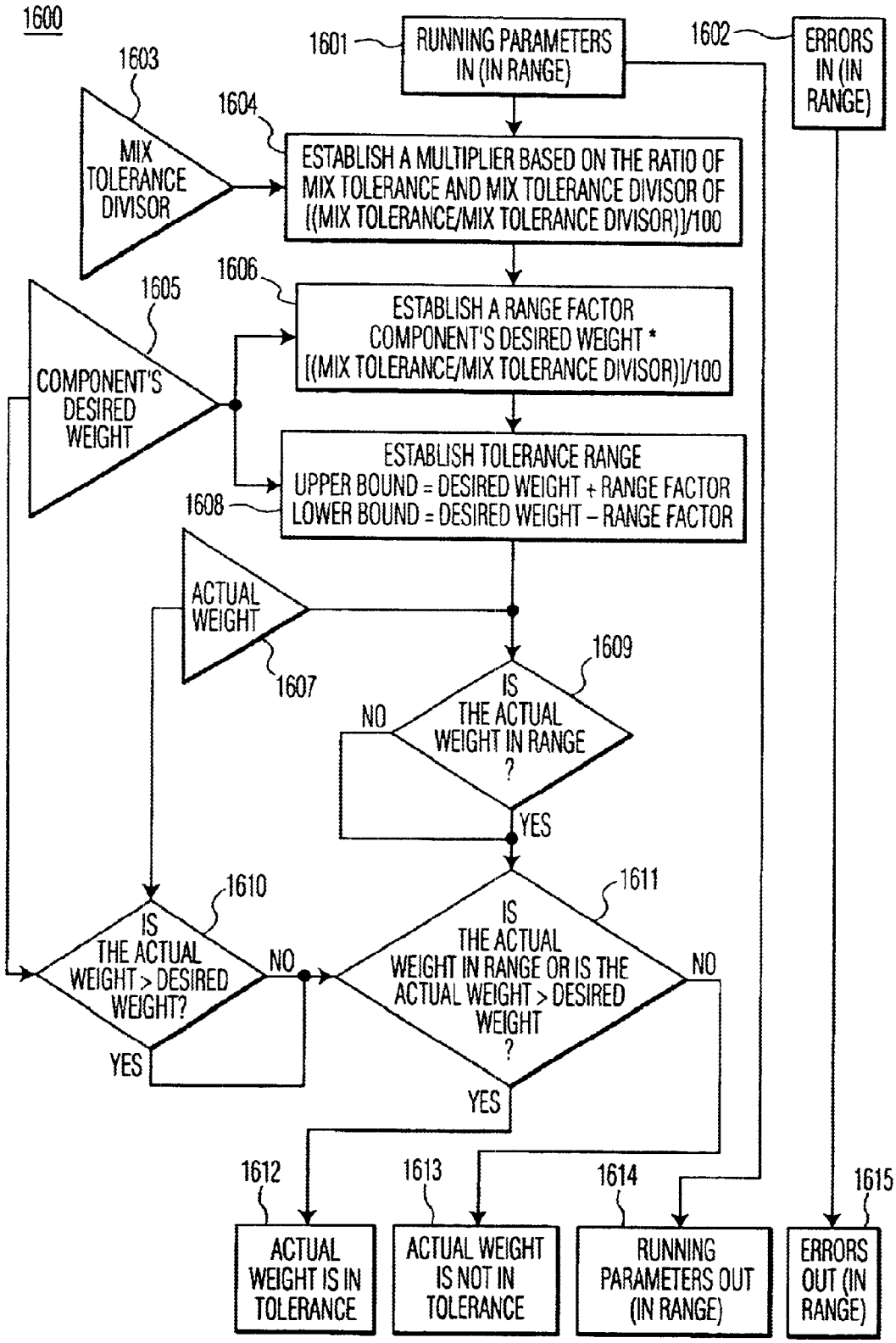
1600
1601
RUNNING PARAMETERS IN (IN RANGE)
1602
ERRORS IN (IN RANGE)
1603
MIX TOLERANCE DIVISOR
1604
ESTABLISH A MULTIPLIER BASED ON THE RATIO OF MIX TOLERANCE AND MIX TOLERANCE DIVISOR OF [(MIX TOLERANCE/MIX TOLERANCE DIVISOR)]/100
1605
COMPONENT'S DESIRED WEIGHT
1606
ESTABLISH A RANGE FACTOR COMPONENT'S DESIRED WEIGHT * [(MIX TOLERANCE/MIX TOLERANCE DIVISOR)]/100
ESTABLISH TOLERANCE RANGE
UPPER BOUND = DESIRED WEIGHT + RANGE FACTOR
LOWER BOUND = DESIRED WEIGHT – RANGE FACTOR
1608
ACTUAL WEIGHT
1607
1609
IS THE ACTUAL WEIGHT IN RANGE ?
NO
YES
1610
IS THE ACTUAL WEIGHT > DESIRED WEIGHT?
NO
YES
1611
IS THE ACTUAL WEIGHT IN RANGE OR IS THE ACTUAL WEIGHT > DESIRED WEIGHT ?
NO
YES
1612
ACTUAL WEIGHT IS IN TOLERANCE
1613
ACTUAL WEIGHT IS NOT IN TOLERANCE
1614
RUNNING PARAMETERS OUT (IN RANGE)
1615
ERRORS OUT (IN RANGE)

FIG. 16

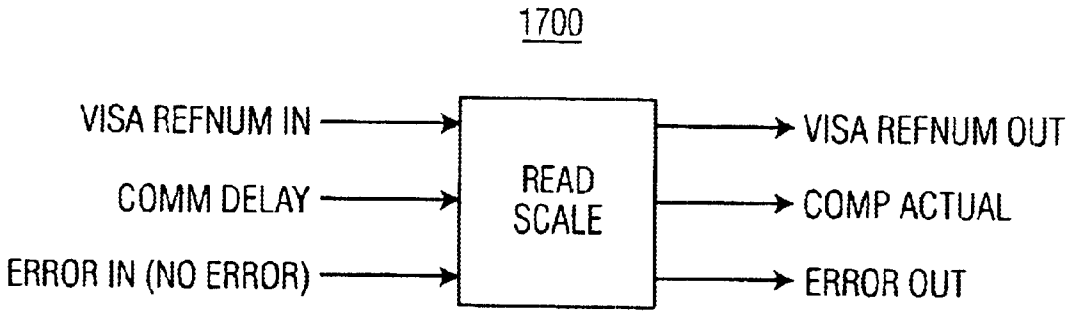
1700
VISA REFNUM IN
COMM DELAY
ERROR IN (NO ERROR)
READ SCALE
VISA REFNUM OUT
COMP ACTUAL
ERROR OUT

FIG. 17

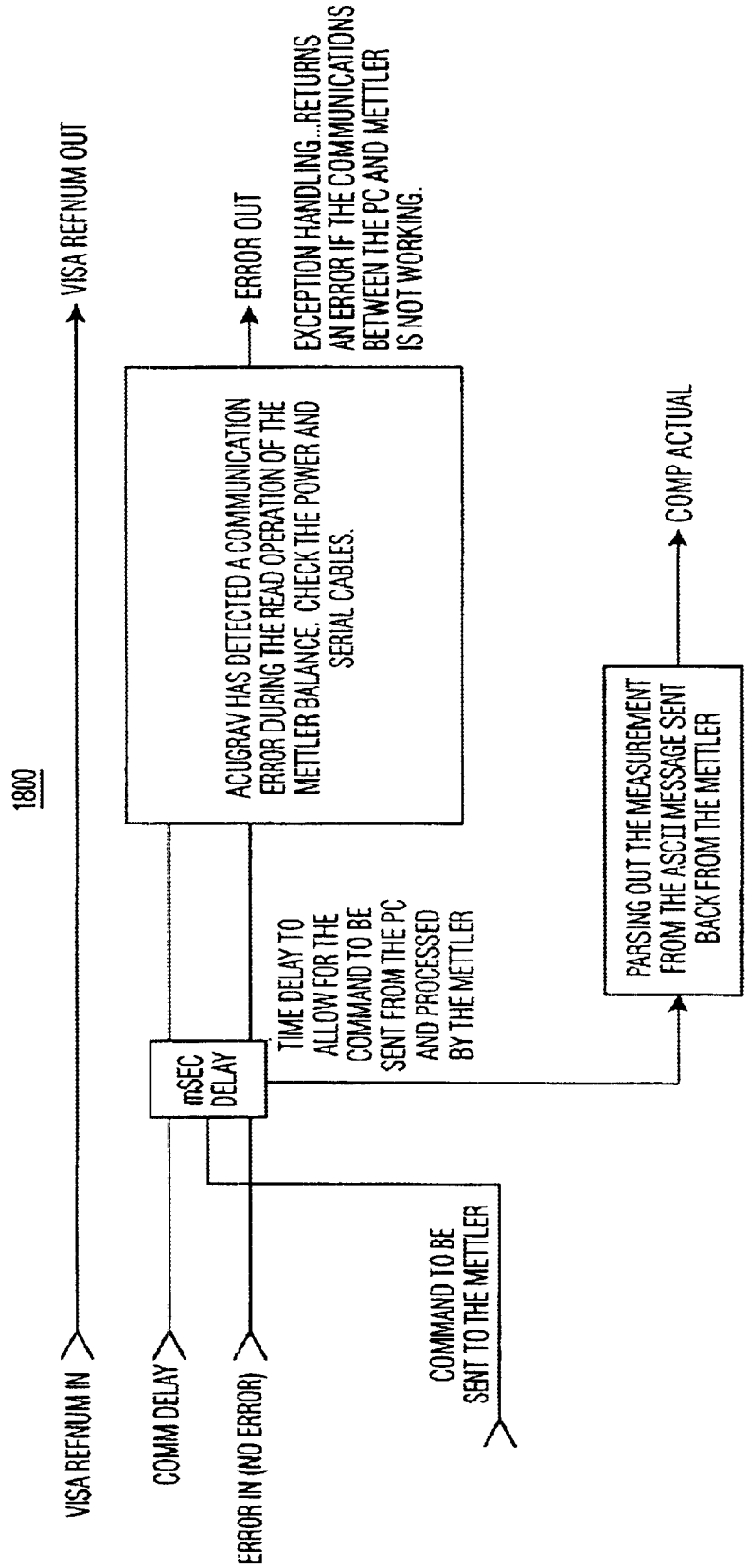
1800
VISA REFNUM IN
VISA REFNUM OUT
COMM DELAY
ERROR IN (NO ERROR)
mSEC DELAY
TIME DELAY TO ALLOW FOR THE COMMAND TO BE SENT FROM THE PC AND PROCESSED BY THE METTLER
COMMAND TO BE SENT TO THE METTLER
ACUGRAV HAS DETECTED A COMMUNICATION ERROR DURING THE READ OPERATION OF THE METTLER BALANCE. CHECK THE POWER AND SERIAL CABLES.
ERROR OUT
EXCEPTION HANDLING...RETURNS AN ERROR IF THE COMMUNICATIONS BETWEEN THE PC AND METTLER IS NOT WORKING.
PARSING OUT THE MEASUREMENT FROM THE ASCII MESSAGE SENT BACK FROM THE METTLER
COMP ACTUAL

FIG. 18

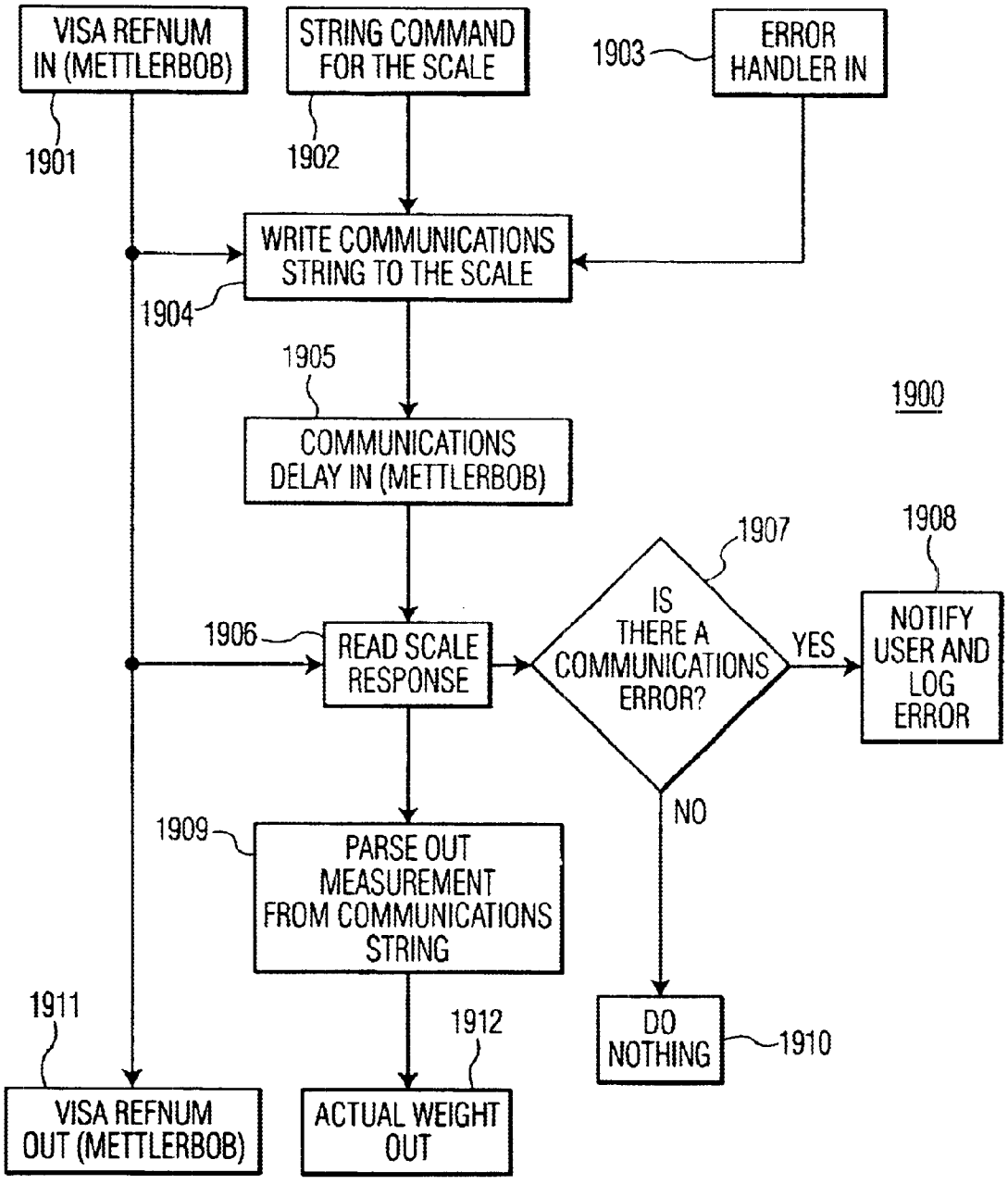
VISA REFNUM IN (METTLERBOB)
1901
STRING COMMAND FOR THE SCALE
1902
1903
ERROR HANDLER IN
WRITE COMMUNICATIONS STRING TO THE SCALE
1904
1905
COMMUNICATIONS DELAY IN (METTLERBOB)
1900
1906
READ SCALE RESPONSE
1907
IS THERE A COMMUNICATIONS ERROR?
YES
1908
NOTIFY USER AND LOG ERROR
NO
1909
PARSE OUT MEASUREMENT FROM COMMUNICATIONS STRING
1910
DO NOTHING
1911
VISA REFNUM OUT (METTLERBOB)
1912
ACTUAL WEIGHT OUT

FIG. 19

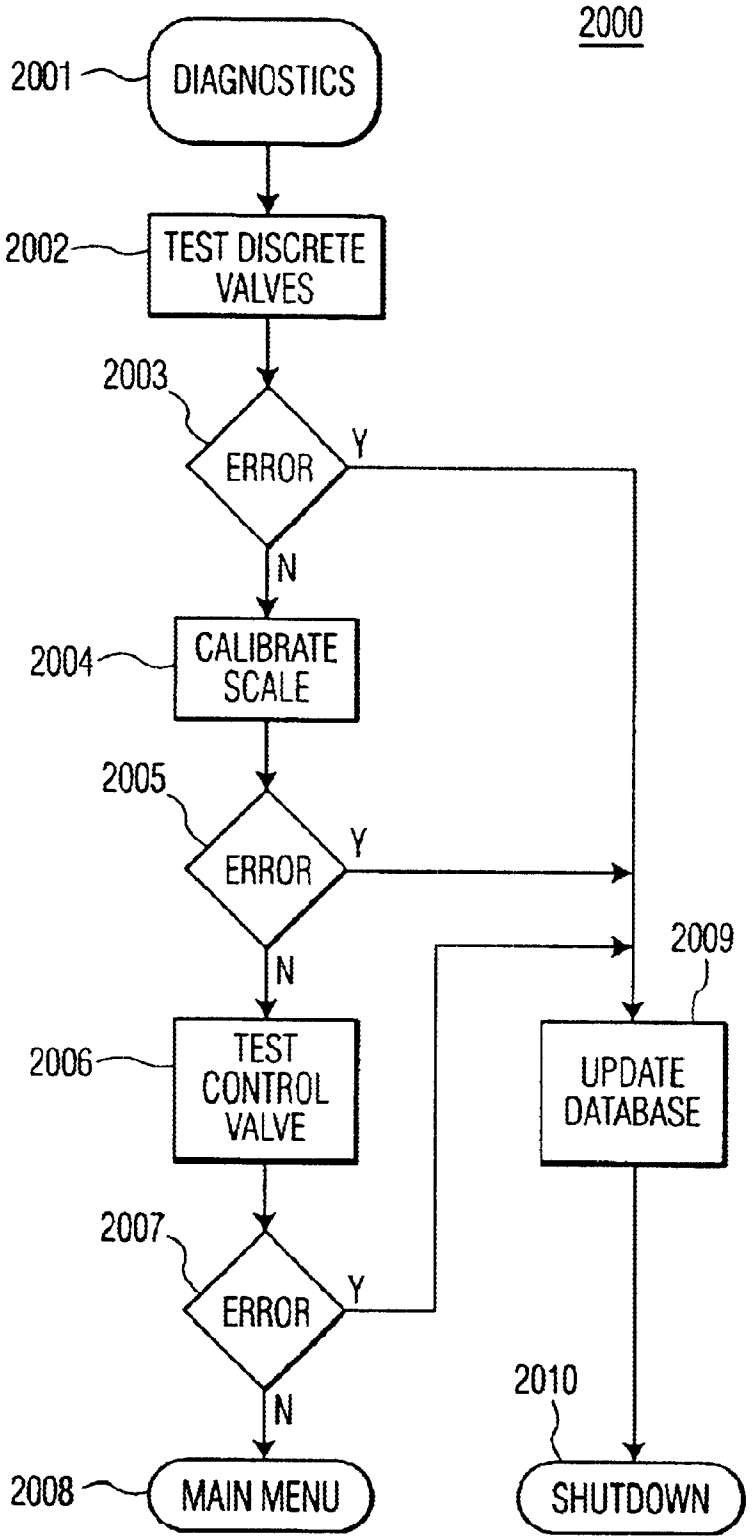
2000
2001
DIAGNOSTICS
2002
TEST DISCRETE VALVES
2003
ERROR
Y
N
2004
CALIBRATE SCALE
2005
ERROR
Y
N
2006
TEST CONTROL VALVE
2007
ERROR
Y
N
2008
MAIN MENU
2009
UPDATE DATABASE
2010
SHUTDOWN

FIG. 20

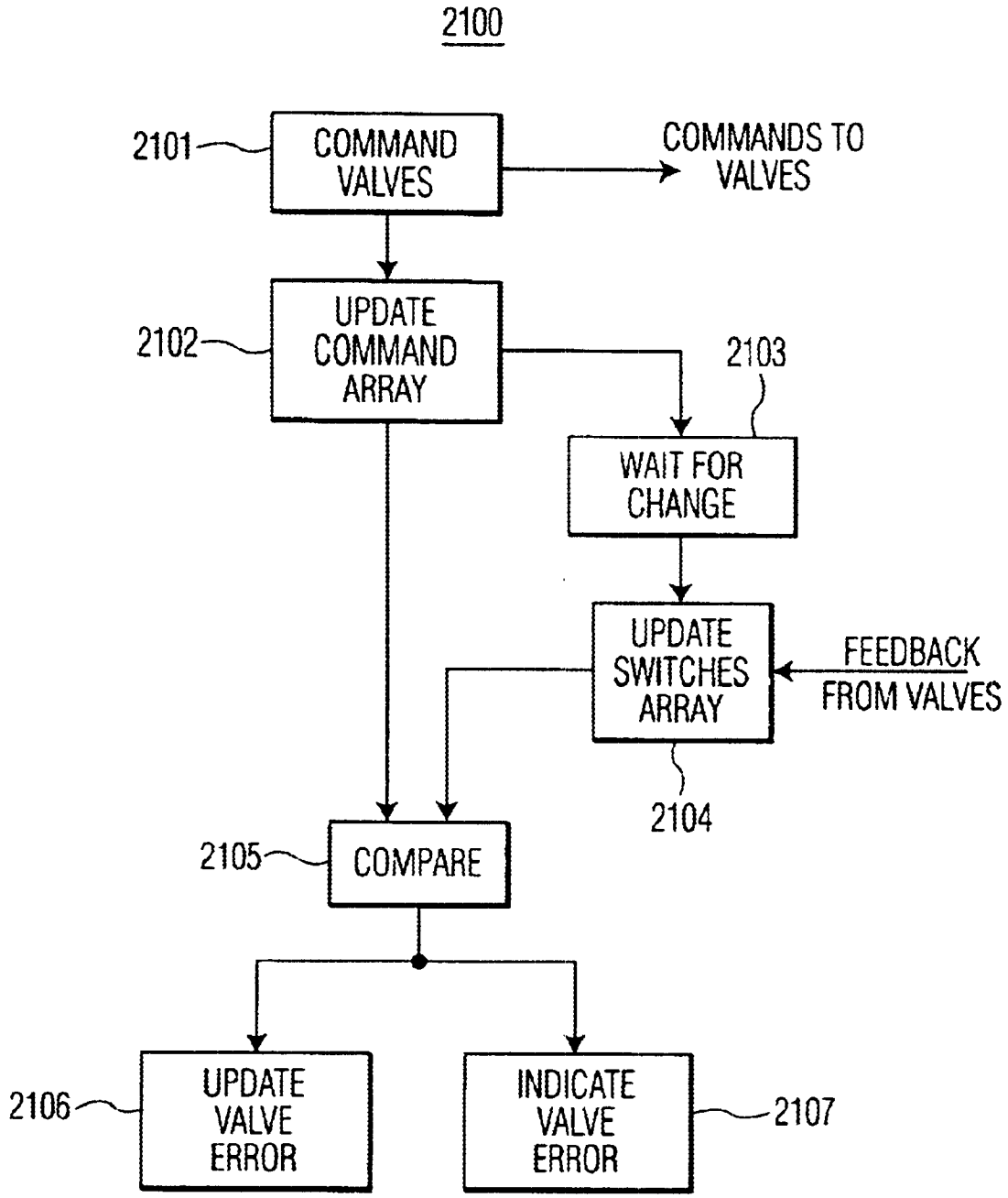
2100
2101
COMMAND VALVES
COMMANDS TO VALVES
2102
UPDATE COMMAND ARRAY
2103
WAIT FOR CHANGE
UPDATE SWITCHES ARRAY
FEEDBACK FROM VALVES
2104
2105
COMPARE
2106
UPDATE VALVE ERROR
INDICATE VALVE ERROR
2107

FIG. 21

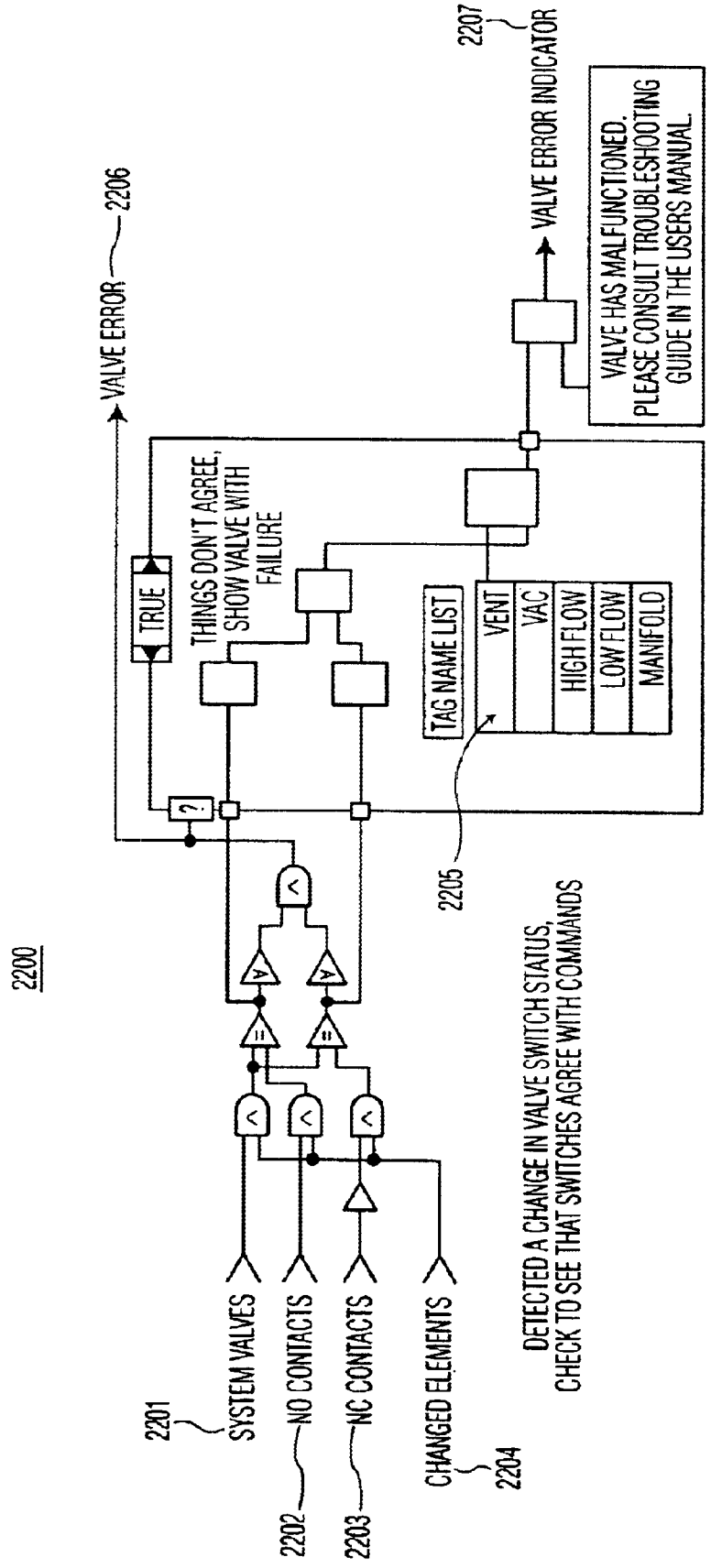
2200
VALVE ERROR
2206
TRUE
THINGS DON'T AGREE, SHOW VALVE WITH FAILURE
?
TAG NAME LIST
VENT
VAC
HIGH FLOW
LOW FLOW
MANIFOLD
2205
2207
VALVE ERROR INDICATOR
VALVE HAS MALFUNCTIONED. PLEASE CONSULT TROUBLESHOOTING GUIDE IN THE USERS MANUAL.
DETECTED A CHANGE IN VALVE SWITCH STATUS, CHECK TO SEE THAT SWITCHES AGREE WITH COMMANDS
2201
SYSTEM VALVES
2202
NO CONTACTS
2203
NC CONTACTS
CHANGED ELEMENTS
2204

FIG. 22

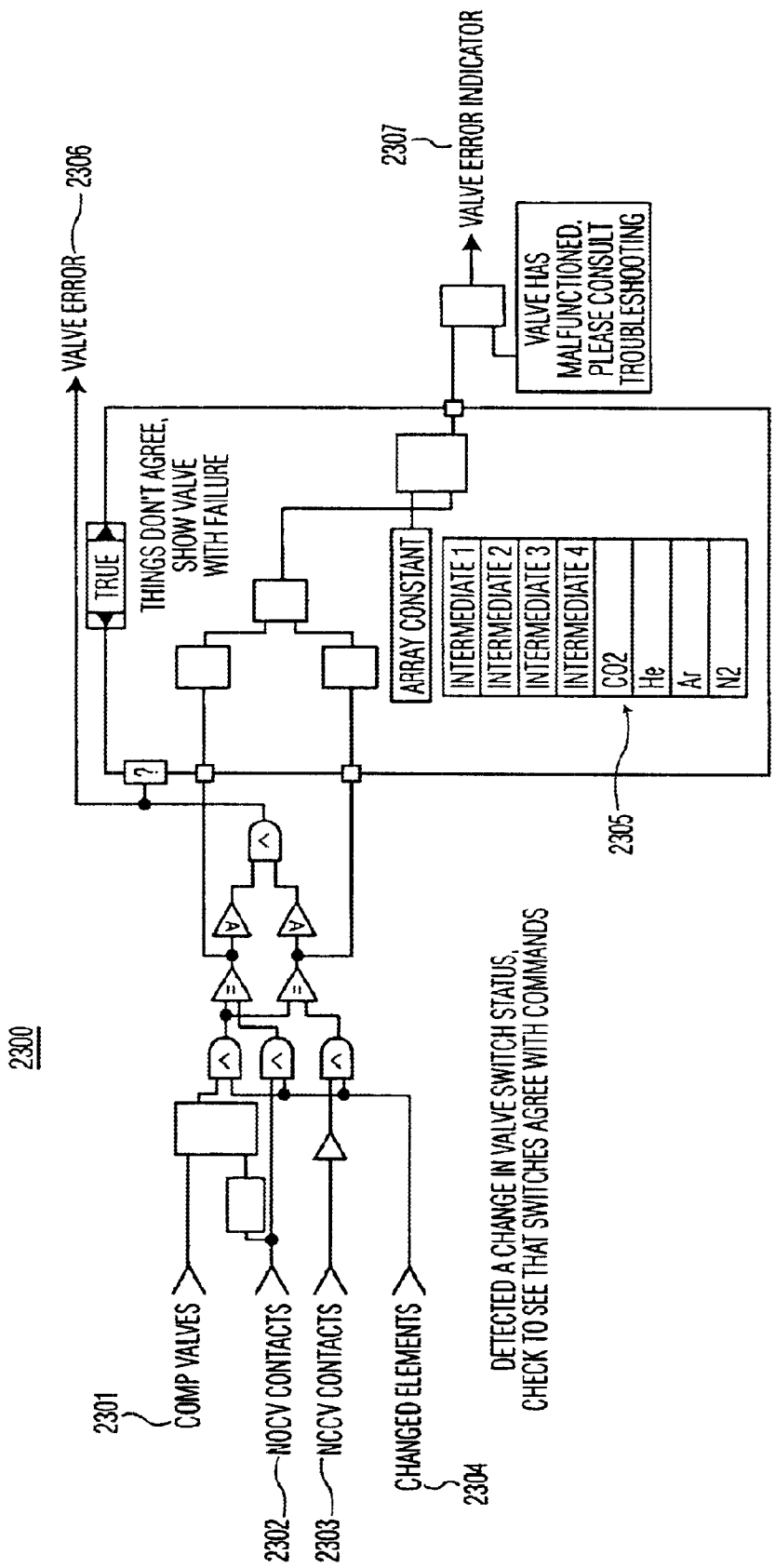
2300
2301
COMP VALVES
2302
NOCV CONTACTS
2303
NCCV CONTACTS
2304
CHANGED ELEMENTS
DETECTED A CHANGE IN VALVE SWITCH STATUS,
CHECK TO SEE THAT SWITCHES AGREE WITH COMMANDS
2305
ARRAY CONSTANT
INTERMEDIATE 1
INTERMEDIATE 2
INTERMEDIATE 3
INTERMEDIATE 4
CO2
He
Ar
N2
TRUE
THINGS DON'T AGREE,
SHOW VALVE
WITH FAILURE
2306
VALVE ERROR
2307
VALVE ERROR INDICATOR
VALVE HAS
MALFUNCTIONED.
PLEASE CONSULT
TROUBLESHOOTING

FIG. 23

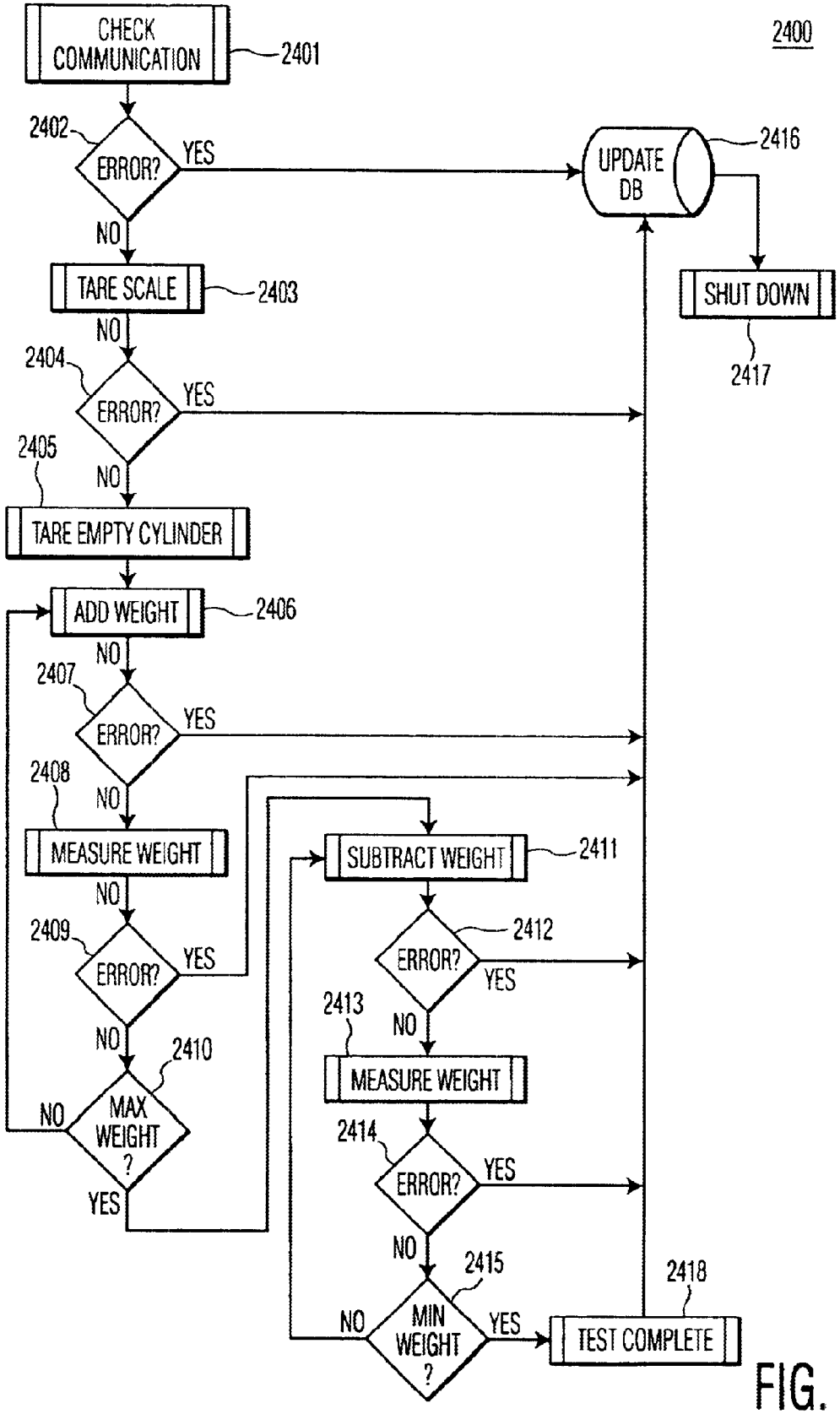
2400
CHECK COMMUNICATION
2401
2402
ERROR?
YES
NO
UPDATE DB
2416
SHUT DOWN
2417
TARE SCALE
2403
2404
ERROR?
YES
NO
2405
TARE EMPTY CYLINDER
ADD WEIGHT
2406
2407
ERROR?
YES
NO
2408
MEASURE WEIGHT
NO
2409
ERROR?
YES
NO
2410
MAX WEIGHT ?
NO
YES
SUBTRACT WEIGHT
2411
2412
ERROR?
YES
NO
2413
MEASURE WEIGHT
2414
ERROR?
YES
NO
2415
MIN WEIGHT ?
NO
YES
2418
TEST COMPLETE

FIG. 24

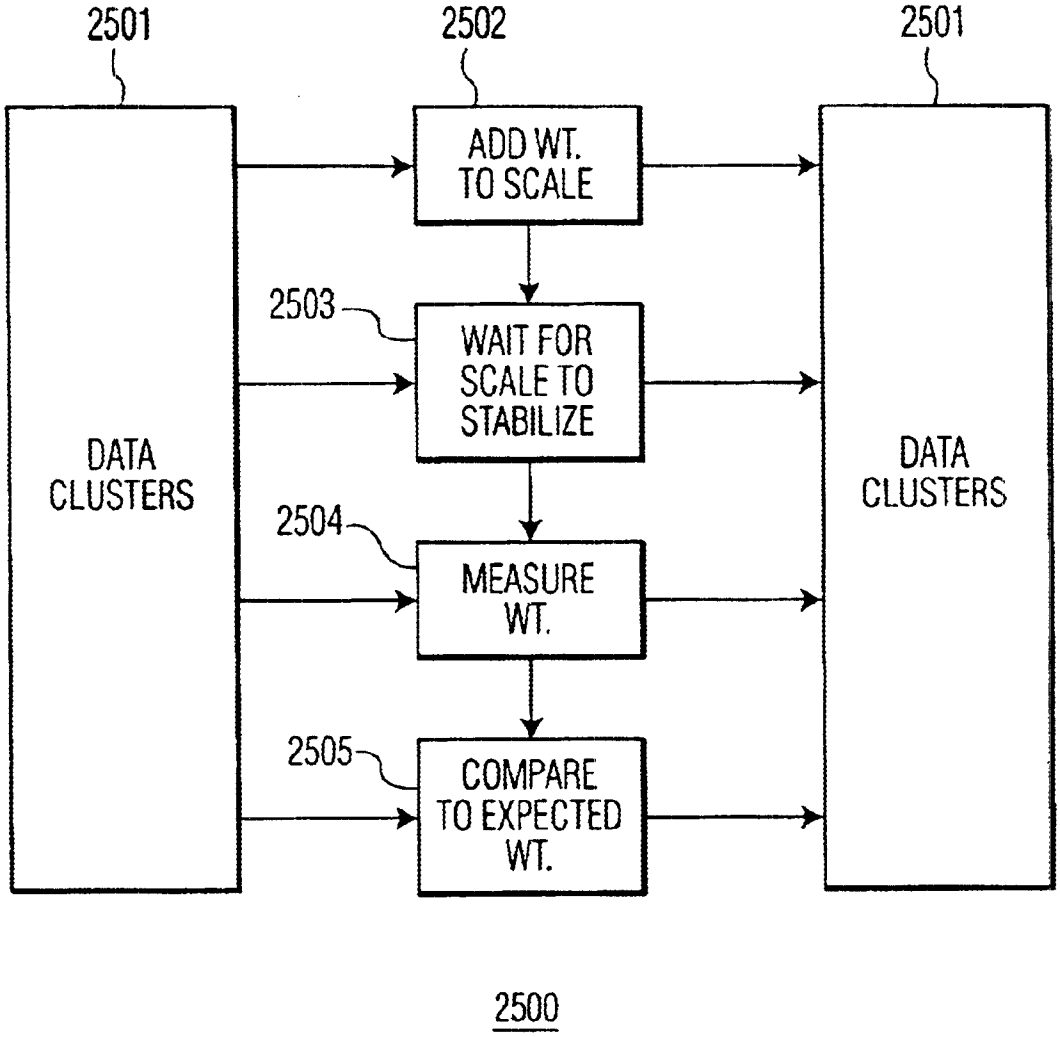
2501
2502
2501
ADD WT. TO SCALE
2503
WAIT FOR SCALE TO STABILIZE
2504
MEASURE WT.
2505
COMPARE TO EXPECTED WT.
DATA CLUSTERS
DATA CLUSTERS
2500

FIG. 25

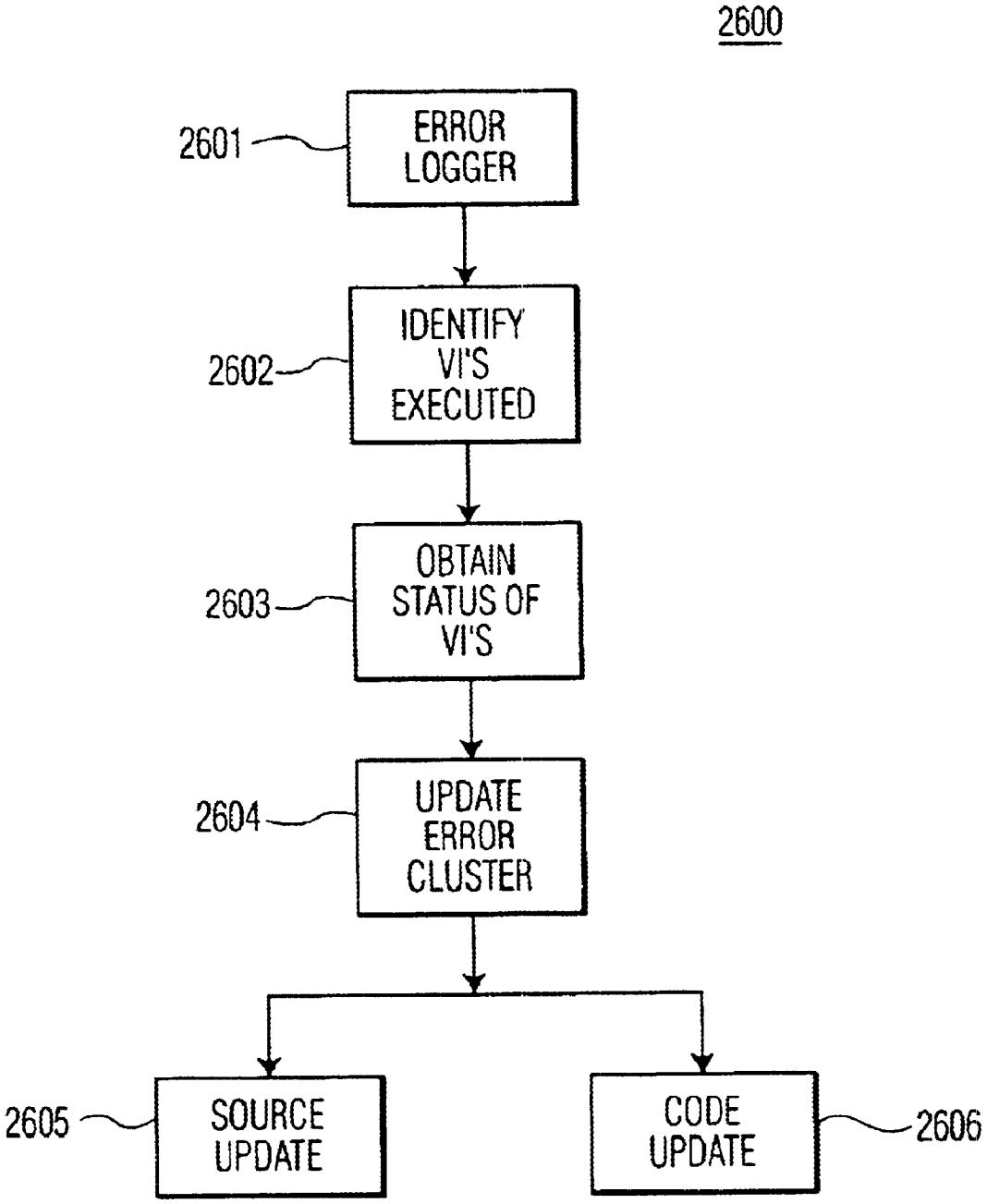
2600
2601
ERROR LOGGER
2602
IDENTIFY VI'S EXECUTED
2603
OBTAIN STATUS OF VI'S
2604
UPDATE ERROR CLUSTER
2605
SOURCE UPDATE
CODE UPDATE
2606

FIG. 26

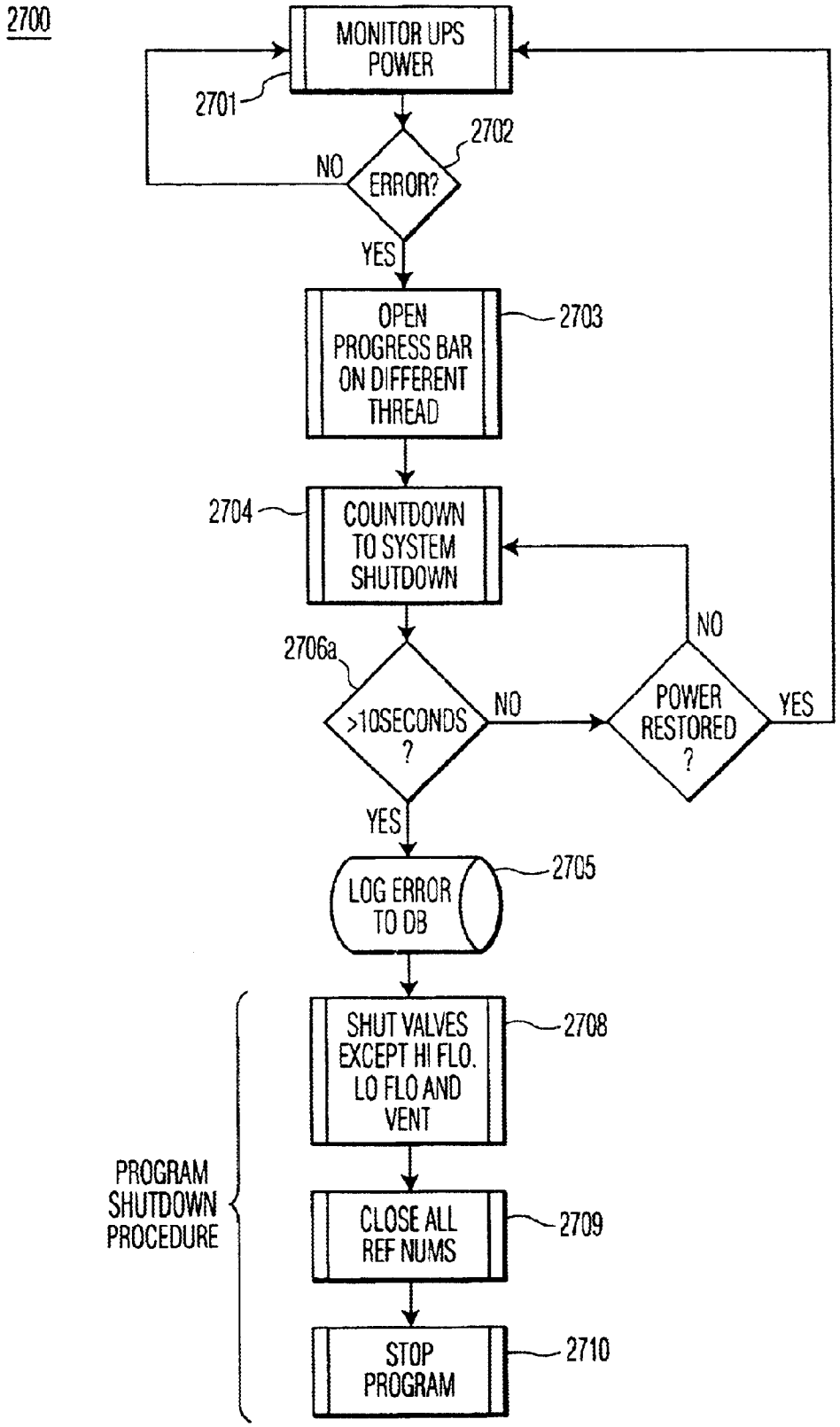
2700
MONITOR UPS POWER
2701
2702
NO
ERROR?
YES
OPEN PROGRESS BAR ON DIFFERENT THREAD
2703
2704
COUNTDOWN TO SYSTEM SHUTDOWN
NO
2706a
>10SECONDS ?
NO
POWER RESTORED ?
YES
YES
LOG ERROR TO DB
2705
SHUT VALVES EXCEPT HI FLO. LO FLO AND VENT
2708
PROGRAM SHUTDOWN PROCEDURE
CLOSE ALL REF NUMS
2709
STOP PROGRAM
2710

FIG. 27

COMPUTER CONTROLLED APPARATUS AND METHOD OF FILLING CYLINDERS WITH GAS

This application claims priority of U.S. Provisional Patent Application Serial No. 60/324,876 filed Sep. 26, 2001.

FIELD OF THE INVENTION

The present invention relates, in general, to a computer controlled method of filling cylinders with gas and, more specifically, to a computer controlled method of filling cylinders with specialty gases requiring precise tolerance in obtaining desired gas mixture ratios.

BACKGROUND OF THE INVENTION

For many years, the process of filling cylinders with gases or gas mixtures was performed manually. The gas distributor would have large storage cylinders filled with liquefied gases, such as oxygen, nitrogen, argon, carbon dioxide and helium. Via a manifold, he would simultaneously fill ten, twenty or more cylinders. As a first step, the cylinders were vented, meaning that whatever gas was in the cylinders was bled off. Usually a vacuum pumping system was connected to the manifold to draw a vacuum to evacuate the cylinders. Often one or more purges were performed, meaning, using a different pumping system, the cylinders would be filled with some of the compressed gas, which was then vented. Then, the cylinders were again evacuated. This purging cycle could be repeated as many times as was necessary with whichever gas was necessary to achieve the desired purity of the cylinders. Finally, the cylinders were filled with the specified gas or gas mixture to a predetermined pressure at a stated temperature.

In the process of making gas mixtures, two predominant methods existed. One method was to fill the cylinders with each gas to a different partial pressure to obtain the desired gas mixture ratios. The other method was to weigh in different amounts of various gases to obtain the desired gas ratios. In performing these various steps, the operator would monitor the temperature of the cylinders and the pressures in the system and, in some cases, a scale representing the weight of the gas in the cylinders. For example, when the cylinders were vented, the operator would monitor the pressure in the cylinders and when it reached a predetermined level, he would know it was time to start the evacuation process. Again, he would monitor the pressure to determine when the next step would be taken. The entire process was very time consuming and resulted in much lost time for the operator and the equipment.

It has been recognized that computer control of the filling process would substantially reduce the time it would take to vent, evacuate and fill cylinders, and thereby increase the number of cylinders that an operator could fill during a given time period. There are computerized systems in the marketplace. They are usually made for a particular system to fill cylinders with a particular gas or gas mixture and are not suited for high tolerance mixtures.

SUMMARY OF THE INVENTION

To meet this and other needs, and in view of its purposes, the present invention provides a method of filling a cylinder with a target weight of a gas. The method uses a computer controlled system that includes (a) a source of gas, (b) a plurality of valves for controlling flow of the gas to the cylinder, (c) a transducer for measuring pressure of the gas flowing to the cylinder, and (d) a weight scale for determining weight of the cylinder when filling the cylinder with the gas. The method of filling the cylinder with a target weight of the gas includes successively measuring the weight of the cylinder at periodic time intervals to obtain successive actual weights of the cylinder; opening a first valve and filling the cylinder with the gas at a high flow rate; and closing the first valve after reaching a predetermined weight difference between the target weight and an actual weight. After closing the first valve, the method opens a second valve and fills the cylinder with the gas at a low flow rate. After opening the second valve to fill the cylinder with the gas, the method also adjustably controls, via an adjustable valve, the flow of gas to the cylinder. The method differences each successively measured actual weight from the target weight of the gas to obtain multiple first difference values. The method also differences adjacently measured actual weights to obtain multiple second difference values. The flow of gas to the cylinder is adjustably controlled based on each first difference value and a corresponding second difference value.

It is understood that the foregoing general description and the following detailed description are exemplary, but are not restrictive, of the invention.

BRIEF DESCRIPTION OF THE DRAWING

The invention is best understood from the following detailed description when read in connection with the accompanying drawing. Included in the drawing are the following figures:

FIG. **1** is a block diagram of a gas cylinder filling system in accordance with an embodiment of the invention;

FIGS. **2***a* through **2***i* are block diagrams of a method of filling one cylinder or multiple cylinders with gas, in accordance with an embodiment of the invention;

FIG. **3** is an exemplary embodiment of a computer display of a virtual instrument (VI) depicting portions of the system shown in FIG. **1**, in accordance with an embodiment of the invention;

FIG. **4** is an exemplary embodiment of a computer display showing clusters of input data and output data available for viewing by a user during operation of the cylinder filling system shown in FIG. **1**, in accordance with an embodiment of the invention;

FIGS. **5***a*–**5***b* and **6** depict an exemplary embodiment of a virtual instrument as it modifies input data to produce output data for controlling an adjustable control valve in the system of FIG. **1**, and in accordance with an embodiment of the invention;

FIG. **7** is a flow diagram depicting a method (Badger control routine) of controlling the adjustable control valve in the system exemplified in FIG. **1**, in accordance with an embodiment of the invention;

FIGS. **8** and **9** depict an exemplary embodiment of a virtual instrument as it modifies input data to produce output data for determining a mix tolerance and a control current adjustment for controlling the adjustable control valve in the system of FIG. **1**, and in accordance with an embodiment of the invention;

FIG. **10** is a flow diagram depicting a method for determining the mix tolerance and the control current adjustment as performed by the virtual instrument shown in FIGS. **8** and **9**, and in accordance with an embodiment of the invention;

FIGS. **11** and **12** depict an exemplary embodiment of a virtual instrument as it determines whether a leak exists in the system of FIG. **1**, in accordance with an embodiment of the invention;

FIG. **13** is a flow diagram depicting a method for determining whether a leak exists as performed by the virtual instrument shown in FIGS. **11** and **12**, and in accordance with an embodiment of the invention;

FIGS. **14** and **15** depict an exemplary embodiment of a virtual instrument as it determines whether a mixture is in-tolerance or out-of-tolerance, as gas is being filled into a cylinder, in accordance with an embodiment of the invention;

FIG. **16** is a flow diagram depicting a method for determining whether a mixture is in-tolerance or out-of-tolerance as performed by the virtual instrument shown in FIGS. **14** and **15**, and in accordance with an embodiment of the invention;

FIGS. **17** and **18** depict an exemplary embodiment of a virtual instrument as it reads actual weight from a scale in the system of FIG. **1**, in accordance with an embodiment of the invention;

FIG. **19** is a flow diagram depicting a method for reading actual weight from a scale as performed by the virtual instrument shown in FIGS. **17** and **18**, and in accordance with an embodiment of the invention;

FIG. **20** is a flow diagram depicting a method of calibrating and diagnosing the operational status of the system shown in FIG. **1** in accordance with an embodiment of the invention;

FIG. **21** is a flow diagram depicting a method of testing the operational status of multiple system valves and component valves of the system shown in FIG. **1** in accordance with an embodiment of the invention;

FIG. **22** illustrates a virtual instrument for checking the operational status of multiple system valves in the gas cylinder filling system shown in FIG. **1**, in accordance with an embodiment of the invention;

FIG. **23** illustrates a virtual instrument for checking the operational status of multiple component valves in the gas cylinder filling system shown in FIG. **1**, in accordance with an embodiment of the invention;

FIG. **24** is a flow diagram depicting a method of calibrating a scale used for measuring weight of a cylinder in the system shown in FIG. **1**, in accordance with an embodiment of the invention;

FIG. **25** is a flow diagram depicting a method of scale calibration illustrated as a graphical virtual instrument routine, in accordance with an embodiment of the invention;

FIG. **26** is a flow diagram depicting a method of logging errors in a data cluster of the system of FIG. **1** during operation, in accordance with an embodiment of the invention; and

FIG. **27** is a flow diagram depicting a method of responding to a power interruption during operation, in accordance with an embodiment of the invention.

DETAILED DESCRIPTION OF THE INVENTION

Referring to FIG. **1**, there is illustrated a cylinder filling system, generally designated by the numeral **10**. As shown, various sources of supply gas are provided in the system, for example, carbon dioxide source **18***a*, helium source **18***b*, argon source **18***c*, and nitrogen source **18***d*. Specialty gases, generally required in minute and accurate amounts, are provided, for example, by intermediate sources I_1–I_3, generally designated by the numerals **16***a*–**16***c*.

A network of valves **24***c*–**24***i*, connected to principal supply conduit **42**, permit the selective connection of conduit **42** to a source gas. Valves **24***c*–**24***i* are individually controlled by respective control output signals from processor **34**. The processor, shown connected to keyboard **36** and printer **32**, may be, for example, a personal computer (PC) executing a Microsoft operating system. Although not shown, proper interface requirements between processor **34** and each respective valve may be satisfied by adaptors residing within the processor or externally of the processor.

Vacuum pump **12** is connected to principal supply conduit **42** by way of control valve **24***a*. Interposed adjacent to control valve **24***a* is vacuum transducer **20**. The vacuum transducer provides an electrical signal representing the amount of vacuum adjacent to control valve **24***a*, when the vacuum pump is operating. Pressure transducer **22***a* monitors system pressure, in psig units, present in principal supply conduit **42**.

The principal supply conduit is connected to vent **14** by way of control valve **24***b*. When the control valve is opened by processor **34**, gases present in principal supply conduit **42** are vented to the atmosphere.

Connected in parallel are high flow control valve **26***a* and low flow control valve **26***b*. As will be explained, a high rate of gas flow is provided from principal supply conduit **42** to manifold conduit **44** by way of control valve **26***a*. For more precise and fine control, a low rate of gas flow is provided from conduit **42** to manifold **44** by way of control valve **26***b*. Opening and closing of rate flow control valves **26***a* and **26***b* are controlled by a program executed by processor **34**. Although not shown in FIG. **1**, it will be appreciated that an input/output interface is provided to condition and buffer the signals inputted to and outputted from processor **34**.

As will be explained, precise control of gas flow from principal supply conduit **42** (also referred to as system conduit **42**) to manifold conduit **44** is provided by adjustable control valve **28**. The adjustable control valve finely controls the amount of gas flowing to the manifold by a pressure converter residing on the control valve. The pressure converter (not shown) detects the amount of control current, in milliamperes, output from processor **34**, and converts the current to a scaled pressure. The control current and, in turn, the scaled pressure, finely and accurately controls the valve. The program in processor **34** provides a resolution sufficiently fine to detect changes as low as one hundredth of a milliamp (0.01 mA) and controls gas additions as little as one tenth of a gram (0.1 gram), regardless of supply pressure or molecular weight of the gas.

As shown in FIG. **1**, adjustable control valve **28** is connected in series with low flow control valve **26***b*. It will be appreciated that when high flow control valve **26***a* is open, both low control valve **26***b* and adjustable control valve **28** are closed. In this manner, gas flows to the manifold only through the high flow control valve. The control current from processor **34** maintains adjustable control valve **28** closed.

When the system switches to a low flow rate, by closing the high flow control valve and opening the low flow control valve, processor **34** also begins to adjust the control current flowing to adjustable control valve **28**. As will be explained, processor **34** either subtracts a predetermined amount of current from, or adds a predetermined amount of current to the control current sent to the adjustable control valve. In this manner, the system may gradually slow the gas flow or gradually increase the gas flow to each cylinder being filled with a gas.

Continuing the description of FIG. **1** there is shown control valve **30** which provides yet another means of

controlling gas flow between system conduit **42** and manifold conduit **44**. Control valve **30** is a manual valve that may be used by the operator when the system is operated in a manual mode (for example, when operated to troubleshoot a leak). Manifold pressure, in psig units, is monitored by pressure transducer **22***b*.

Multiple fill cylinders **38***a*–**38***c* are connected for filling through manifold **44**. Each cylinder may be individually filled, or simultaneously filled with other fill cylinders, by a computer program which accounts and calculates the amount of supply gas required to accommodate single or multiple fill cylinders.

Scales **40***a*–**40***c* are provided to continuously weigh cylinders **38***a*–**38***c*, respectively. The scales communicate bidirectionally with processor **34**, advantageously providing stability and accuracy of weight readings. As will be explained, the scales reach a state of equilibrium, before a weight is read by the processor. It will be appreciated that scales **40***a*–**40***c* may be a single scale that is sufficiently large to accommodate multiple cylinders.

Cylinder filling system **10** (excluding gas sources **16** and **18**, and excluding cylinders **38** and scales **40**) may be packaged within an enclosure having volumetric dimensions less than 72 inches in height, 45 inches in width, and 24 inches in depth. System **10** is thus a portable system that may be easily transported from one location to another, and then may be readily connected to various gas sources and used to fill multiple gas cylinders.

A method of filling the cylinders with gas is shown in FIGS. **2***a*–**2***i* and is generally designated by the numeral **50**. The method may be PC based through Microsoft Windows. The method is a software program written, for example, in LabVIEW, which is a high level programming language. The program is preferably executed on a PC running at 1 Gigahertz.

Referring now to FIG. **2***a*, the operation for filling the cylinders will be described with reference to a flow chart of the program software by which processor **34** operates. The routine starts at **51** and branches concurrently to data acquisition loop **52**, start logic loop **53**, and error checking loop **54**. The data acquisition loop continuously checks for an emergency shutdown in decision box **55** and aborts acquisition in step **58**, if decision box **55** detects an emergency shutdown. Similarly, error checking loop **54** continuously checks for an error in decision box **57** and provides an emergency shutdown in step **60**, if an error is detected.

The start logic begins with user log-in in step **56** and verification of valid log-in in step **59** by checking user password or ID. After successful log-in, the user may enter a system diagnostic routine in step **62**. Upon detecting an error during diagnostics in step **65**, the system loops back to step **58** and aborts acquisition. The user may also select a report generation mode in step **61** and prepare a report by way of a printer in step **64**. After generating the report, decision box **67** loops the operation back to select mode **61**, allowing the user to make another decision.

If the user selects to fill cylinders in step **61**, the fill cylinder mode is entered in step **63**. Initialization of the system begins in step **66**, with the user entering customer information as prompted on the display. After the customer information is entered in step **68**, and the program verifies that the information is complete in step **69**, the data base is updated in step **80** (FIG. **2***b*). The program next prompts the user to complete the recipe form through step **81** and decision box **82**.

The valves of the intermediate sources are vented (steps **83**, **84** and **85**) and checked for leaks (steps **86** and **87**). If a leak is detected (step **91** in FIG. **2***c*), the user is notified (step **92**) and the system is shut down (step **93**). After eliminating the leak, the program allows the user to continue operation (step **90**).

The desired valves are prepared for purging the system (step **94**) and the system is purged (step **95**) using an appropriate house gas that is consistent with the mix requirements (for example CO_2 or N_2). The system is then vented (steps **96**, **97** and **98**), and prepared for evacuation (step **99**).

Continuing the description, reference is now made to FIG. **2***d*. The system is evacuated (steps **110** and **111**) and the intermediate valves are closed, after verification of a good vacuum (step **112**).

Having vented, purged and evacuated the system, operation proceeds to prepare the target cylinders for filling. The user is prompted to open the desired cylinders (steps **113**, **114** and **115**). Verification is made that the cylinders are empty (steps **116** and **117**). If the cylinders are not empty, the program prompts the user to change cylinders and shuts down the system (steps **118** and **119**).

Continuing the description with reference to FIG. **2***e*, the program verifies that a vacuum is maintained in the system between the fill valves and the target cylinders (steps **130** and **131**). The user is prompted to change cylinders, if a bad vacuum is confirmed (steps **132**, **133**, **134**, and **135**).

The desired fill valves are next prepared to be opened (step **136**). The user is prompted, with a form displayed on the screen, to open the intermediate valves (steps **137** and **138**). The weight of the cylinders are next determined by the scales. It will be appreciated that each cylinder may have a separate dedicated scale, as shown in FIG. **1**, or multiple cylinders may share a single scale. The tare weight of the cylinder is determined and (for example) set to zero as a reference (steps **139** and **143**).

The program verifies that proper signal communication exists between each scale and computer processor **34** (FIG. **1**). If an error is detected in communications between the scale and the processor, the system shuts down and the user is notified (steps **140**, **141** and **142**). If communication is proper and the tare weight is confirmed, the desired fill valves are opened, one valve at a time (steps **144** and **150** shown, respectively, in FIG. **2***e* and FIG. **2***f*). Checks for proper communication are performed sequentially each time a new fill valve is opened to deliver a respective gas component to the cylinder or cylinders.

Next, as shown in FIG. **2***f*, pressure in each of the conduits having an opened fill valve is verified (steps **151** and **152**). If pressure is inadequate, the system is shut down and the user is notified (steps **153** and **154**).

The manifold valve is opened in steps **155** and **156**. The program then determines (steps **157** through **160**) whether to open high flow valve **26***a* or low flow valve **26***b* (as shown in FIG. **1**).

Assuming that the high flow valve is opened first (steps **171** in FIG. **2***g*), a specific gas is supplied to one or multiple cylinders at a high flow rate. The weight scale continuously measures the present weight of each cylinder, as gas is being supplied to the cylinder. The measured weight is continuously and, at a periodic rate, sent to the processor for update (step **173**). If a communications error is detected, the system is shut down, all valves are placed in a predetermined shutdown state, and the user is notified (steps **175**, **176** and **180**).

As the present weight of a cylinder approaches its target weight, or is within a predetermined range of the target

weight (as determined in steps **179** and **185**), the system is equalized and switched to the low flow rate (steps **187**, **189** and **190**). In the exemplified embodiment shown in FIG. **1**, when the actual weight of each cylinder (one cylinder or multiple cylinders), as it is being filled, approaches its target fill weight, within a predetermined amount (for example, 30 grams or less) the method switches to the low flow rate. In addition, in a situation of only one cylinder being filled, when the system pressure is greater than 1000 psi, and the actual weight of the cylinder being filled approaches its target weight, within another predetermined amount (for example, 60 grams or less) the method switches to the low flow rate. In other situations, the high flow rate valve may be opened and the low flow rate valve closed.

If, at the start of filling one cylinder, the desired weight is less than 30 grams, or the desired weight is between 30 grams and 60 grams and the system pressure is greater than 1000 psi, then the low flow rate valve is opened at the start without first opening the high flow rate valve. If, at the start of filling multiple cylinders, the desired weight is less than 30 grams, then the low flow rate valve is opened at the start without first opening the high flow rate valve. Otherwise, the high flow rate valve is opened first.

When filling a primary standard, the method uses the following criteria to switch from high flow to low flow:

(A) If the system pressure is less than 500 psi, the switch point is set to the target weight less 10% of the system pressure;

(B) If the system pressure is greater than 500 psi, and more than four cylinders are being filled, the switch point is set to the target weight less 100 grams; and

(C) If the system pressure is greater than 500 psi and less than five cylinders are being filled, the switch point is set to the target weight less 40 grams.

When filling a certified standard, the method uses the following criteria to switch from high flow to low flow:

(A) If the system pressure is greater than or equal to 500 psi, the switch point is set to the target weight less 20 grams;

(B) If the system pressure is less than 500 psi, and more than four cylinders are being filled, the switch point is set to the target weight less 20 times the number of target cylinders; and

(C) If the system pressure is greater than or equal to 500 psi, the switch point is set to the target weight less 20 grams.

After closing the high flow valve and opening the low flow valve, operation proceeds from step **170**, shown in FIG. **2***g*. As will be explained in detail, flow of gas to the cylinder is carefully controlled from processor **34** by controlling the amount of current (in milliamperes) provided to control valve **28** (FIG. **1**). Based on a required mixture tolerance, a milliampere (mA) adjustment value is calculated in step **172** for adaptively controlling the amount of gas flowing into the cylinder (explained later by referring to FIGS. **9** and **10**).

The weight scale is periodically and continuously read in step **174**. If a communications error is detected, the system is shut down, all valves are placed in the predetermined shutdown state, and the user is notified (steps **177**, **178** and **181**). The program in steps **182** and **183** determines if the mixture is within tolerance. If the mixture is not within tolerance, operation branches to step **184**, which then loops back to step **170**, as shown in FIG. **2***g*. As will be explained (with reference to FIGS. **6** and **7**), an adaptive control algorithm, provided by step **184**, adds or subtracts a mA adjustment value to or from the mA control output signal provided to control valve **28**. This adaptive control continues, until the present weight of the cylinder being filled is within a tolerance band of the target weight of the cylinder.

After the mixture is within the tolerance band, a source valve (for example, valve **24***c*) is closed, thereby shutting off further gas flow into the system (for example, gas flow from intermediate source I_1). The closing of a source valve (component valve) is performed by steps **186** and **188**.

Referring next to FIGS. **2***h* and **2***i*, the program enters steps **200** through **202** to check whether the final settled component weight is within tolerance. If the final component weight is not within tolerance, operation is aborted and the user is notified (step **203**). If the component weight is within tolerance, the program determines whether other gas components are required to be added into the cylinder (steps **204** and **205**). If more gas components are required, the program branches to step **206** (loop state **206** in FIG. **2***d*) for preparation of the cylinder to receive another gas component.

If no more gas components are required, the close-intermediate-valve form on the display is opened (step **207**) and, after the user verifies that the intermediate valves are closed, the system is vented (steps **208** and **209**). The intermediate valves are vented (steps **220** and **221**), the system is vacuumed (step **222**) and the intermediate lines are closed (step **223**). Finally, the database is updated (step **224**) and, if available, the next process form is selected (step **225**).

The program executed by processor **34** generates several display screens which are displayed by a monitor (not shown) for guiding the user in setting up and operating the system. The program reports on the progress and status of the system during operation and produces reports in connection with a filling operation. An example of overall system operation and status displayed on a screen is shown in FIG. **3**. As shown, the display, generally designated by the numeral **300**, illustrates a configuration of the filling system, similar to system **10** shown in FIG. **1**. The source gases (I_1–I_3 and, for example, CO_2, He, Ar and H_2) are identified on the display. The desired amount in grams (target amount) of a specific gas and the actual amount in grams (present amount) of the specific gas are shown in two separate rows at the middle portion of the screen. Whether the specific gas is in-tolerance or out-of-tolerance is also indicated in a third row.

The present or current status of the system is shown by way of digital gauges showing analog displays depicting readings sensed by vacuum transducer **20** of FIG. **1** in Torrs or milliTorrs, and readings sensed by pressure transducers **22***a* and **22***b* of FIG. **1** in psig. Whether the high flow valve (**26***a* of FIG. **1**) or the low flow valve (**26***b* of FIG. **1**) is open is displayed to the viewer. The valve control signal, indicating current in mA, is also displayed. The filling cylinders which are connected to the manifold are also identified.

Finally, on the right side of display **300**, emergency shutdown is indicated by a STOP legend. The mix tolerance required for filling a particular customer request is also indicated. The fill time, as well as the purge gas, are identified.

The software program executing method **50** of FIGS. **2***a*–**2***i* moves all necessary information from one routine to another routine as clusters of information. The clusters include various data types which are stored as arrays, scalars or strings. Since all necessary information is moved in clusters, updates may easily be made to the entire program without requiring large-scale revisions. The main clusters are "error in", "error out", "running parameters in", "running parameters out", "actual weight in", and "configuration settings".

The "error in" cluster accepts error or warning information from previously called routines and is used by a currently executing routine. The "error out" cluster passes error or warning information out of a routine and is to be used by a future executing routine. The error cluster provides critical data or information to the user so that errors may be corrected and system operation may be continued. Similarly, the "running parameters in" cluster contains data or information obtained from previously called routines for use by the presently executing routine. The "running parameters out" cluster passes data or information out of a routine to be used by a future executing routine. Accordingly, the clusters described may be data stored in buffers which are continuously updated by a routine fetching data from the buffers and modifying the data during execution. Since the running parameters cluster identifies and defines repetitive data types used in the program, routines may be updated easily by adding or deleting a data type from the cluster.

The clusters of information used by the processor in executing the routines are listed in Table 1. The types of information and data included in each cluster is also listed and described in the table. These clusters of information may also be viewed when programming system operation, thereby providing the programmer with immediate status of the operation of the system. All the clusters (except "configuration settings") may be viewed on display screen **400** shown in FIG. **4**.

The software routines executed by processor **34** may be implemented in Microsoft Windows using G programming language. G language is a general-purpose programming language including libraries for data acquisition, GPIB and serial instrument control, data analysis, data presentation and data storage. G differs from C or Basic, for example, in that G is a graphical programming language, while C or Basic is a text-based language and includes lines of code.

G programs are called virtual instruments (VIs), because their appearance imitates actual instruments. A VI includes a user interface called a front panel since it simulates a panel of a physical instrument. The front panel may contain knobs, push buttons, other controls and indicators. A user may enter data using a mouse and a keyboard. The user may view results of the entered data on the computer display. FIG. **3** shows an example of a front panel depicting portions of system **10**. The front panel includes various controls and indicators available to the user during the operation of filling a cylinder with gas. The user may also observe the flow of gas from one point to another point. Each type of gas may be shown in a different color so that the viewer (user) may more easily observe the operation.

A VI may also include a block diagram that shows various modules of the system interfacing with the controls and indicators and. The VI may also include hidden modules that perform some operation, for example a computation or a loop construct. The block diagram generally shows the input data on the left side and the output data on the right side of the diagram. The VI generally executes from left-to-right. An example of a block diagram of a VI is shown in FIGS. **5***a* and **6** (Badger Control) and is discussed below.

Turning next to detailed descriptions of the software routines executed by the processor, the Badger control routine (Badger Control. VI) will now be described. It will be appreciated that Badger Control provides the control current signal (control valve numeric shown belonging in the "running parameters out" cluster of Table 1). The control valve signal is sent to control valve **28**, shown in FIG. **1**, for linearly and finely adjusting the setting of the control valve. The signal may vary, for example, from 4 mA (valve completely closed) to 20 mA (valve completely open).

The Badger control routine operates using the "running parameters in" cluster, "actual weight in" cluster, "error in" cluster and the "configuration setting" cluster, as defined in Table 1. Upon completion of the operation, Badger control modifies the "running parameters in" to provide the "running parameters out" and "error out". This is schematically shown in FIG. **5***a*. More specifically, five items from the "running parameters in" cluster, one item from the "configuration settings" cluster and the "actual weight in" cluster are operated on by Badger control, as shown in FIG. **5***b*. One item from the "configuration setting" cluster, namely mA adjustment, is generated by another routine, which will be explained later. The seven items of data shown in FIG. **5***b* are used to increase or decrease the amount of current sent to a pressure converter on the adjustable control valve. As previously described, the current is converted to a scaled pressure on the adjustable control valve. The resolution of this routine is such that changes as low as one hundredth (0.01) of a mA can be detected, resulting in the ability to add as little as a tenth (0.1) of a gram of any gas, regardless of supply pressure or molecular weight.

A state diagram, generally designated as **600**, of the Badger control routine is shown in FIG. **6**. This state diagram may be better understood with the following explanation of the operation of the Badger control routine.

The operation of the Badger control routine, generally designated with the numeral **700**, is shown as a flow diagram in FIG. **7**. As shown, the routine or method accepts information or data from "running parameters in" in block **701** and "configuration settings" (mAmp adjustment) in block **707**. Decision box **702** determines whether the difference in successive measurements (actual weight minus previous weight) is greater than or equal to the difference between the present weight (actual weight) and target weight (desired weight). If true, the method branches to step **704** and applies no valve adjustment control. In parallel with decision box **702**, the method in decision box **703** determines whether the buffers (scale deltas) are empty, or have values that are approximately zero (in other words, the differences between successive actual weights are approximately zero). If false, the method branches to step **704** and applies no valve adjustment control.

If, on the other hand, decision box **702** determines a false condition, or decision box **703** determines a true condition, the method branches to decision box **706**. Decision box **706** determines whether the difference in successive measurements is less than the difference between the present weight and the target weight. If true, the method reaches decision box **705** to determine if the control valve numeric is less than or equal to 4 mA (valve completely closed). If less than or equal to 4 mA, no valve adjustment is made. If the control valve numeric is greater than 4 mA, however, the method reaches step **709** and subtracts a predetermined fixed value of mA (current) from the control valve numeric.

It will be appreciated that the predetermined fixed value of mA is the "mA adjustment" numeric residing in the "configuration settings" cluster. The manner in which the "mA adjustment" numeric is calculated will be described later. It will also be appreciated that when subtracting the "mA adjustment" numeric from the "control valve" numeric, the control valve is adjusted to reduce the gas flow rate flowing to the manifold.

If decision box **706** determines that the difference in successive measurements is not less than the difference between the present weight and the target weight, the operation reaches decision box **708**. Decision box **708** determines whether the control valve numeric is greater than

or equal to 20 mA (valve completely open). If the valve is completely open, step **711** is reached and no valve adjustment is made. If the valve is not completely open, step **710** is reached and a predetermined fixed value, based on the calculated "mA adjustment" numeric is added to the "control valve" numeric, thereby increasing the flow rate to the manifold.

The Badger control routine continues cycling between step **701** and step **712** until the difference between the present (actual) weight and the target (desired) weight diminishes to a set point. As this happens, the sampling rate overtakes the difference and the rate of change becomes so small that the difference between successive scale samples approaches zero. As the difference in successive samples approaches zero, the "scale deltas" in the running parameters cluster is filled with zeros (in other words, the buffers are empty, as determined by decision box **703** of FIG. **7**).

Although not shown in FIG. **7**, the difference between the desired (target) weight and the actual (present) weight is scaled (or multiplied) by a fixed value, for example, 0.01. It is actually this scaled difference that is checked against the successive measurements in operation **700**. This multiplier is essentially a timing variable used to achieve equilibrium with the sampling rate of the data acquisition system. The logic used in method **700**, including the scaled multiplier, is shown in Table 2.

It will be appreciated that the "scale deltas" shown in Table 2 is a 10-element array serving as a buffer for the last 10 scale deltas. A scale delta is defined, as shown in Table 1, to be the difference between the actual weight and the previous weight (successive measurements of the scale). Since this is a 10-element array and weight is sampled once every tenth of a second, the scale (balance) must remain unchanged for only one second to fill up the array with zeros. The Badger control routine may cycle once per second, as the sampled weights fill up the array every one second.

In an embodiment of the invention, the Badger control routine begins with the adjustable control valve closed (that is, the processor, via an appropriate interface, provides less than 4 milliamps to the valve). In order for the processor not to apply control to the valve, two conditions are required. The first condition requires that the scale buffer, which is a ten element array populated with ten values, each obtained by successively subtracting an actual weight from a previous weight, should each be approximately zero. Another condition requires that the actual weight minus the previous weight is greater than or equal to the desired weight minus the actual weight (this value is also scaled by 0.01, which is essentially a timing variable used to equilibrate the routine with the sampling rate of the data acquisition system). If either of these conditions are true, the Badger control routine applies no control.

When one of these conditions becomes false, however, the method determines whether to add amperage to, or subtract amperage from, the control current provided to the control valve. The scaled difference between the desired weight and the actual weight diminishes as the balance approaches the set point. As this happens, the sampling rate overtakes the difference, and the rate of change becomes so small that the difference between successive scale samples is approximately zero. This, in turn, fills the scale deltas with zeros. Because a 10 element array is used (for example) and the balance is sampled once every tenth of a second, the balance must remain unchanged for only one second for the method to again attempt control.

Having described the Badger routine, the manner in which the "mA adjustment" numeric and a "Mix Tolerance Divisor" numeric is determined (see configuration settings in Table 1 for definition) will be described next. Both numerics are determined by the "determine variable tolerance" routine **800** shown in FIG. **8**. The input and output data clusters of the "determine variable tolerance" routine is schematically shown in FIG. **8**. A state diagram of this routine, generally designated as **900**, is shown in FIG. **9**.

As shown in FIG. **9**, routine **900** uses the following information from the "running parameters in" cluster: cylinder quantity, system pressure, desired weights, current component and mix tolerance. These are defined in Table 1. Routine **900** establishes the Mix Tolerance Divisor and the mAmp adjustment based on the required tolerance, the desired weight of the gas component and the system pressure (which is the current pressure of the gas component).

Fine adjustments are made to the Mix Tolerance Divisor and mAmp adjustment when dealing with primary mixes. When the mix is a Certified Standard (mix tolerance greater than 1) the Mix Tolerance Divisor and the mAmp adjustment are set to default value of 2.0 and 0.00010 mAmp, respectively.

A primary mixture requires sharper guidelines to adjust flow rate. When the desired weight is greater than 100 g, the Mix Tolerance Divisor is set to 3 and the mAmp adjustment to 0.000010. These settings are derived from experience and establish a tolerance zone so that when the actual weight is within this zone there is no doubt that the value is "good". It is a safety net.

If a primary mixture's component includes a desired weight that is less than 100 g, the system pressure is taken into account to correctly adjust the Mix Tolerance Divisor and mAmp Adjustment. It is not possible to assign a single default value for mAmp adjustment and Mix Tolerance Divisor. By taking into account variables, such as system pressure, the routine more closely reflects the actual system and its resulting gas flow dynamics. When the system pressure is less than 1000 psig, the Mix Tolerance Divisor is set to 1.5 and the mAmp Adjustment is 0.000010 mAmps. However, when the system pressure is greater than 1000 psig, the Mix Tolerance Divisor is set to 1 and the mAmp Adjustment is 0.000010 mAmps.

The advantage of using the above described "safety net" may be seen in the following example. When requirements of a primary mix tolerance of 1%, a desired weight of 10 grams for the gas, and a system pressure of less than 1000 psig are established, routine **900** uses a Mix Tolerance Divisor of 1.5. If the Mix Tolerance Divisor is not used (e.g. Mix Tolerance Divisor set to 1.00), the actual prepared concentration would be within specification with an actual weight between 9.90 and 10.10 grams (e.g. 1%). On the other hand, if the Mix Tolerance Divisor is set to 1.50, the actual prepared concentration would be within specification with an actual weight between 9.93 and 10.07 grams. In this case, a safety net is extended to the upper and lower bounds of the range. The tolerance of the latter case is more tight than the tolerance of the former case.

It will be appreciated that a tighter safety net may be set by using a divisor that has a value larger than 1.5, for example 3.0. A divisor of 3.0 extends the safety net to require producing a mixture between 9.97 and 10.03 grams. Due to excellent control of the system, a mixture may be produced with a very tight tolerance much better than 1%.

The operation of "determine variable tolerance" routine **900** is shown as a flow diagram in FIG. **10** and is generally designated with the numeral **1000**. As shown, starting with the Mix Tolerance Divisor and mA Adjustment stored in the "running parameters in" cluster, step **1009** sequences to

decision box **1002**. Decision box **1002** determines whether the mix tolerance set by the user (per specification) is less than or equal to 1%. If false, decision box **1002** branches to step **1001** and sets the Mix Tolerance Divisor to 2.0 and the mAmp Adjustment to 0.0001. If true, decision box **1002** branches to decision box **1005** to determine if the desired weight of the component gas is greater than 100 grams. If desired weight is greater than 100 grams, step **1007** is entered, and the Mix Tolerance Divisor is set to 3.0 and the mAmp Adjustment is set to 0.00001. If desired weight is less than or equal to 100 grams, decision box **1004** is entered to determine the system pressure setting. If system pressure is greater than or equal to 1000 psig, step **1006** is performed. Otherwise, step **1003** is performed. Step **1006** sets the divisor to 1.0 and the mAmp Adjustment to 0.00001. Step **1003**, on the other hand, sets the divisor to 1.5 and the mAmp Adjustment to 0.00001. These two parameters are stored in the "configuration settings out" cluster in step **1008**.

One factor resulting in an emergency shutdown, shown in FIG. **2***a* (step **60**), occurs when a gross leak is detected in the system. A gross leak is defined as a change in manifold pressure greater than 300 psig. A gross leak is detected by routine **1100** shown in FIG. **11**. A state diagram of routine **1100**, generally designated with the numeral **1200**, is illustrated in FIG. **12**. The information used by the routine from the "running parameters in" cluster is also shown. The output of the routine is a boolean value indicating that a change in manifold pressure greater than 300 psig has occurred (true) or has not occurred (false). The routine also detects a gross leak occurring from a stuck valve.

FIG. **13** shows a flow diagram of gross leak routine **1100**, and is generally designated as **1300**. As shown, between input step **1301** and output step **1307**, decision box **1303** is entered. Decision box **1303** determines whether the manifold pressure is greater than 200 psig. If false, step **1305** decides that there is no leak. If true, step **1302** subtracts the previous manifold pressure from the current manifold pressure. Next, decision box **1304** determines if the difference in successive manifold pressures is greater than 300 psig. If the difference is greater than 300 psig, step **1306** decides that a gross leak has occurred.

FIG. **14** shows in-tolerance routine **1400** which determines if a mixture is in-tolerance or out-of-tolerance (see FIG. **2***g*, blocks **182** and **183**). A state diagram of routine **1400** is shown in FIG. **15**, generally designated with the numeral **1500**. As shown, the following information is used by the routine as an input: mix tolerance, desired weights, current component, Mix Tolerance Divisor and actual weight IN.

FIG. **16** depicts a flow diagram of the in-tolerance routine, generally designated by the numeral **1600**. Operation starts with inputting the running parameters in step **1601**, including the Mix Tolerance Divisor (step **1603**), the component's desired weight (step **1605**) and actual weight IN (step **1607**). Step **1604** establishes a multiplier based on the ratio of the mix tolerance required by the user and the Mix Tolerance Divisor. A range factor is established with the formula shown in step **1606**. Subsequently, step **1608** establishes the tolerance range using the two equations shown in the box.

Decision boxes **1609**, **1610** and **1611** determine whether the actual weight is in range and whether the actual weight is greater than the desired weight. Step **1612** or **1613** is entered depending on whether the actual weight is in-tolerance or the actual weight is out-of-tolerance, respectively. Finally, step **1614** updates the running parameters and step **1615** provides an appropriate indication to the user.

FIG. **17** shows read scale routine **1700**, which communicates with a scale measuring the weight of a cylinder being filled with a gas component. It will be appreciated that a scale may measure the weight of a single cylinder or multiple cylinders. The scale may be a Mettler balance, for example. Communications between the Mettler balance and processor **34** is bidirectional. Commands are sent from processor **34** to control the Mettler balance and weight measurements are sent from the Mettler balance to the processor. Communications between the processor and the Mettler balance may be direct, thereby eliminating a need for signal conditioning or buffering.

A state diagram of routine **1700** is shown in FIG. **18**, generally designated with the numeral **1800**. As shown, the following information is used by the routine as an input: Virtual Instrument Reference Number In (VISA Reference In), communications delay and error in. The following information is output by the routine: VISA Reference Out, error out and component actual weight.

FIG. **19** depicts a flow diagram of the read scale routine, generally designated with the numeral **1900**. As shown, a string command is sent from the processor to the scale (steps **1902** and **1904**). A predetermined time delay is provided (for example, 25 msec) to allow for the command to be sent to the scale from the processor and be processed by the scale (step **1905**). The routine then reads the scale response (step **1906**) and parses out the weight measurements (steps **1909** and **1912**).

Communication errors are handled by error handler in (step **1903**) and modified by error handler out (step **1908**). If no communication errors are detected in step **1907**, modifications are not made to the error handling routine (step **1910**). Each string command sent to the scale is identified and tagged by VISA Reference In and VISA Reference Out (steps **1901** and **1911**).

Turning next to various diagnostic routines executed by the processor, there is shown diagnostic method **2000** in FIG. **20**. As shown, the method enters the diagnostic mode in step **2001**. The discrete valves (five system valves and eight component valves, as listed in Table 1) are individually tested in step **2002**. The physical state of each valve is monitored and compared to program logic (explained below). If the state of a valve disagrees with the program logic, decision box **2003** determines that an error has occurred. The method enters step **2009** and updates the database to store the status of the discrete valves. The system is shutdown in step **2010**.

If decision box **2003** determines that an error has not occurred, the method enters step **2004** and calibrates the scale (explained below). Decision box **2005** is entered next. If the calibration indicates that the scale is not in tolerance, the method loops to step **2009** and updates the database. The system is shutdown in step **2010**. If decision box **2005** determines that the scale is within tolerance, step **2006** is entered and the control valve (valve **28** in FIG. **1**) is tested. As will be explained, the method applies different current values (4–20 mA, for example) to the control valve. Each current value causes the control valve to more fully open or more fully close from its previous state. The method monitors a set of respective switches that indicate if the control valve has physically moved through its dynamic range. If an error is detected in decision box **2007**, the method loops to step **2009** and updates the database. The system shuts down in step **2010**. If an error is not detected, however, the method permits operation to continue by branching back to the main menu in step **2008**.

It will be appreciated that although FIG. **20** shows that the discrete valves, the scale and control valve are sequentially

tested, in another embodiment each may be tested in a different sequence or each may be individually tested. For example, the user may program the processor to execute scale calibration (step **2004**) or control valve test (step **2006**) at different times (for example, once per week).

A discrete valve test method is shown in FIG. **21** and is generally designated as **2100**. The method monitors the physical state of each valve and compares it to the program logic. The physical state of each valve is monitored via a respective switch mounted to the valve that responds to physical movements of the valve. The method enters step **2101** and commands the system and component valves to open or close. As listed in Table 1, there are 5 system valves and 8 component valves. The commands to each valve may be sent sequentially (one valve command after another valve command) or concurrently (commands generated to all valves in substantially the same time). Step **2102** updates the command arrays in response to the commands sent to the valves. The system valves array may be a 5-element Boolean array and the component valves array may be an 8-element Boolean array. As a command is sent to a valve, the array is updated.

The method waits a predetermined time to allow each valve to change state (step **2103**). The method monitors the feedback from each switch and updates two system valve arrays and two component valve arrays. These arrays are a normally-open (NO) array and a normally-closed (NC) array for the system valves; and a NO array and a NC array for the component valves (step **2104**). The command arrays (system and component command arrays) are continuously compared to the feedback states stored in the switches (system and component valve arrays (step **2105**). If the states of the switches stored in the arrays do not match the command arrays, the method updates the error cluster (step **2106**) and may shut down the system. The method may also provide a valve error indicator to the display and may identify a failed system valve or a component valve (step **2107**).

FIG. **22** illustrates a check system valves virtual instrument (VI) diagram, designated as **2200**. As shown, system valves array **2201** is logically compared to NO contacts array **2202** and NC contacts array **2203**. Changed elements Boolean **2204** stores an indication that the logic has detected a change in the valve switch status. If the system valves array does not agree with either the NO contacts array or the NC contacts array, the VI provides valve error Boolean **2206** to the error cluster. The logic of the VI tags a name to the system valve error. The names of the system valves are stored in table **2205**. The name of the malfunctioned system valve is provided to the display via valve error indicator **2207**.

Similar to the check system valves VI, FIG. **23** illustrates a check component valves VI diagram, designated as **2300**. As shown, component valves array **2301** is logically compared to NO component valves contacts array **2302** and NC component valves contacts array **2303**. Changed elements Boolean **2304** stores an indication that the logic has detected a change in the valve switch status. Detection of a change enables the AND-gates of the logic. If the component valves array does not agree with either the NO contacts array or the NC contacts array, the VI provides valve error Boolean **2306** to the error cluster and the name of the component valve that has malfunctioned via valve error indicator **2307**.

FIG. **24** illustrates a method for performing scale calibration, designated as **2400**. The method begins in step **2401** and checks communications between processor **34** and weight scales **40***a*–**40***c* (FIG. **1**). If an error is detected in step **2402**, the method branches to step **2416** and updates the database (error cluster). The system is shut down in step **2417**.

If an error is not detected, the method branches to step **2403** and prompts the user, through a dialog screen on the display to zero the weight of the scale (tare weight). If the weight of the scale is correctly zeroed, as determined by decision box **2404**, the method prompts the user to zero the weight of an empty cylinder (step **2405**). An appropriate weight is added to the scale (step **2406**). Another dialog screen prompts the user to measure the weight on the scale (step **2408**). The method continues to prompt the user to add more weight until a maximum weight is reached (step **2410**).

If the maximum weight has been reached, the method begins to prompt the user to subtract weight from the scale (step **2411**). The user is prompted to measure the weight on the scale (step **2413**). The method continues to prompt the user to subtract weight until a minimum weight is reached (step **2415**). The method may detect an error during the calibration process at each of decision boxes **2407**, **2409**, **2412** and **2414**. Any detected error during calibration may cause the method to update the database (error cluster) and then shut down the system.

It will be appreciated that each scale in the system may be sequentially calibrated, one at a time, or concurrently calibrated at substantially the same time by adding or subtracting the same weights from each scale. The method prompts the user to serially add specific weights and serially subtract specific weights. The method compares the measured weights read by the scale with the expected weights stored in the database. If the measured weights and the expected weights are not within a tolerance of 1 gram, the method determines that the scale is out of calibration and may shut down the system.

FIG. **25** illustrates a scale calibration method as a graphical VI routine, generally designated **2500**. Step **2502** prompts the user to add weight to the scale. The amount of weight to be added is stored in the running parameters cluster of data clusters **2501**. For example, a desired weight may be stored as an element in a desired weight array. Step **2502** prompts the user to add the desired weight obtained from the data cluster.

After the desired weight is added by the user, step **2503** waits for the scale to stabilize. A timer may be started and step **2503** may then wait until a sufficient time interval passes (for example 5 seconds), so that the scale is stabilized. After the timeout, step **2504** reads the weight on the scale and reports the actual weight via the communications path to the processor. The actual weight read by the scale is stored as an element in an actual weight array in data clusters **2501**. The desired weight stored in the desired weight array is compared to the actual weight stored in the actual weight array (step **2505**).

In this manner, the method uses the data stored in the data clusters as input values to determine a succession of weights to add to the scale (or multiple scales), and a succession of weights to subtract from the scale (not shown). The method uses timeout data stored in the data clusters to determine a waiting interval before reading the scale. The method uses the configuration setting cluster to determine an amount of increase (or decrease) of weight on a scale. The method also uses the error cluster to report and store errors. As data is updated (for example, weight pointers, cumulative weights, error tolerance, timer count), the elements in the data cluster arrays are also updated.

FIG. **26** illustrates a method for logging errors, which may have occurred in program routines executed by the processor. The error logger method begins at step **2601**. Program routines which have executed, such as control valve test virtual instrument (VI), valve actuation test VI, and scale

calibration VI, are identified in step **2602**. The status (a Boolean indicating error or no error) of each executed VI is obtained in step **2603**. The error logger routine accepts the status information from these VIs and updates the error cluster in step **2604**. A source string is updated in step **2605**, which may describe the origin of the error and may provide a warning to the user. A code string is updated in step **2606**, which describes and gives more information about the error. A pop-up option may also be displayed to visually provide an explanation of the error to the user.

A method of responding to primary power interruption is shown in FIG. **27** and is generally designated as **2700**. The method monitors the status of the universal power supply (UPS), which is a back-up power supply (step **2701**). If an error is detected by step **2702** (for example, back-up supply is below a predetermined voltage level), the method enters step **2703**. A UPS timer subroutine begins to execute on a separate thread in the processor. In this manner, the power status may be monitored without hindering the main program running in the processor.

A countdown to system shut down is started in step **2704**. The method continues to check for primary power restoration (step **2706***b*). If primary power is not restored within 10 seconds (step **2706***a*), the method branches to step **2705** and logs the error to a database. All valves, except high flow valve (**26***a*), low flow valve (**26***b*) and vent valve (**24***b*), are closed (step **2708**). Reference numbers in the program are closed (step **2709**) and the program is stopped (step **2710**).

Although illustrated and described herein with reference to certain specific embodiments, the present invention is nevertheless not intended to be limited to the details shown. Rather, various modifications may be made in the details within the scope and range of equivalents of the claims and without departing from the spirit of the invention.

TABLE 1

CLUSTERS OF INFORMATION AND DATA USED BY THE PROCESSOR FOR CONTROL AND STATUS INDICATIONS.

Controls and Indicators
error in (no error). The error in cluster can accept error information wired from VIs previously called. Use this information to decide if any functionality should be bypassed in the event of errors from other VIs. The pop-up option Explain Error (or Explain Warning) gives more information about the error displayed.
Status. The status boolean is either TRUE (X) for an error, or FALSE (checkmark) for no error or a warning. The pop-up option Explain Error (or Explain Warning) gives more information about the error displayed.
code. The code input identifies the error or warning. The pop-up option Explain Error (or Explain Warning) gives more information about the error displayed.
source. The source string describes the origin of the error or warning. The pop-up option Explain Error (or Explain Warning) gives more information about the error displayed.
Actual Weight IN. This value represents the actual weight measured by the Metler scale representing the weight of the component currently being added.
Config Settings. Ms delay for the main logic loop.
Purge Level. This Pressure Setting compares the manifold pressure to this pre-set value that has been read in from an initialization file or the system defaults and replaces the respective boolean array control with the boolean "answer" to the greater than/equal to comparison.
Vent Level. This pressure setting acts as a comparator in the "Vent Intermediate Lines" state, where the resultant boolean from a greater than or equal to the system pressure, is passed to the boolean valve control array.
Prep Vac Level. This value is a pre-defined parameter read from an initialization file or system defaults that is used as a comparator to the system pressure. Depending on if the system pressure is less than or equal to this value the vacuum valve will be remain closed or open.

TABLE 1-continued

CLUSTERS OF INFORMATION AND DATA USED BY THE PROCESSOR FOR CONTROL AND STATUS INDICATIONS.

Vac Level. This is a pre-defined value through an initialization file or by default that is used in a number of states to compare actual vacuum levels to the pre-defined level. Its main function is to give a pre-defined value to compare against and thus generate a boolean in response. The boolean is subsequently used in a case structure to decide on the best course of action.
Mix Tol Divisor. The Mix Tolerance Divisor is a configuration setting and exists as a double precision numeric. It's default value is either read from an in file or the system defaults. The value of this setting is dependent on the Mix Tolerance, the Desired Weight of a particular component and the system pressure. Given different values for these variables a decision making scheme is employed to adjust this Mix Tolerance Divisor. It is a major variable used in developing the tolerance range to which the Actual Weight is compared in the "In Tolerance". VI
Mix Tol Divisor Big Add. This function is not used in this version of software. It will be removed from subsequent versions.
Low Flow Mass. This pre-configured value is used to set the parameter for Low Flow Mass when determining the range used to check the actual value measured from the scale relative to the desired. It is used in conjunction with the Low Flow Tolerance.
Low Flow Tolerance. The Low Flow Tolerance is used to set the tolerance range to which the actual weight of a component is measured against its desired weight. The outcome is a boolean that is used to decide the next appropriate step.
High Precision Range. The High Precision Range is used in determining the range from which an component's actual weight is compared to the desired weight. This value is set to a default 40 g when the component is one of the following gases: CO(2), Ar, N(2).
Low Precision Range. This configuration parameter is used in defining the range to which the actual component weight is compared to the desired component weight. Specifically, it is used when an intermediate is above 1000 PSIG and one is making a primary mix. (Mix Tol <= 1%).
Main Loop. This configuration control provides a pre-defined delay time to be used in the main state machine While Loop. Using a delay aids in data flow by regulating the amount of time a piece of data is read from a certain location. For example, without a delay a value may be read multiple time from the same location increasing the chance of corrupting your data. Delays are used in data acquisition and error loops for the same reasons. (aliasing, etc)
Read Final Weight Delay. This configuration control provides a pre-defined delay time to be used in the main state machine While Loop. Using a delay aids in data flow by regulating the amount of time a piece of data is read from a certain location. For example, without a delay a value may be read multiple time from the same location increasing the chance of corrupting your data. Delays are used in data acquisition and error loops for the same reasons. (aliasing, etc)
Data Acq Main. This configuration control provides a pre-defined delay time to be used in the main state machine While Loop. Using a delay aids in data flow by regulating the amount of time a piece of data is read from a certain location. For example, without a delay a value may be read multiple time from the same location increasing the chance of corrupting your data. Delays are used in data acquisition and error loops for the same reasons. (aliasing, etc)
Error Loop Main. This configuration control provides a pre-defined delay time to be used in the main state machine While Loop. Using a delay aids in data flow by regulating the amount of time a piece of data is read from a certain location. For example, without a delay a value may be read multiple time from the same location increasing the chance of corrupting your data. Delays are used in data acquisition and error loops for the same reasons. (aliasing, etc)
Error Loop CV. This pre-configured control is used in the exception handling state machine to compare against the current error monitoring value for the component valves.
Error Loop SV. This pre-configured control is used in the exception handling state machine to compare against the current error monitoring value for the system valves.
mA adjustment. This double precision numeric control is a variable determined in an external subroutine. Once the value is ported to this variable it serves to determine the mAmp adjustment to be applied.
MT Max Pres. This is a pre-defined pressure, through an initialization file or by default, that is used in comparison to the Manifold

TABLE 1-continued

CLUSTERS OF INFORMATION AND DATA USED BY THE PROCESSOR FOR CONTROL AND STATUS INDICATIONS.

pressure as a check to see if the attached cylinder(s) have been properly prepared.

Running Params IN. This cluster is composed of 28 data types. The following data types are of use in the subroutine:

Scale Deltas: A 10 element array of the last 10 scale readings.

Actual Weights: 8 element array of the current scale readings

Fill Time. Time it takes to fill the cylinder. Continuously updated as cycle per gases.

Desired Weights. 8 element array for the desired weights relative to the inlet position.

Weights. Element of the Desired Weights Array. There are 8 elements in this array. Each one representing a corresponding intermediate or house gas.

Actual Weights. This is an 8 element array of current scale readings relative to the inlet position.

Weights. Element of Actual Weights Array.

Vac Hi. This double precision floating variable represents the current Hi Vacuum channel reading in Torr

System Pressure. Pressure(psig) of system not manifold. Used to take pressure readings that do not require the manifold valve to be open. The reason for this is that in between component additions it is necessary to isolate the main system from the manifold in order to prepare the system for the next addition. Also, this allows AccuGrav to confirm that the next component is of sufficient pressure to complete the desired addition and avoid back flow.

Manifold PSI. Pressure(psig) of manifold not the system. Used to determine the actual pressure in the manifold and/or the cylinders. Used to determine if next component to be added has sufficient pressure.

Eg: The next component is at least 100 psig greater than the current manifold pressure.

Mix Tolerance. This a user input as a double precision numeric that determines the tolerance to which the mix should be produced. In addition, this variable is used in other areas of the program which correlate mixture tolerance with rate of change of the Metler balance.

Previous Weight. This number is a double precision floating value which represents the scale reading on the programs last iteration.

Control Valve. This is a double precision numeric control that outputs the mAmp value to the control value.

Purge Gas. Enumerated type that returns the Purge gas used in the system. May be one of the following: CO(2), He, Ar, N(2)

Current Component. Integer scalar variable used to index the following arrays: Desired Weights and Actual Weights.

Component Valve. This is an 8 element boolean array: int1, int2, int3, int4, CO(2), He, Ar, N(2). This is used in the logic loop of the program to control when a given valve is open or closed. The data acquisition loop constantly monitors a local variable of this array to determine when a change has occurred so it may update Fieldpoint to carry out the instruction. In addition, as a result of Fieldpoint issuing a command to the valve, two more arrays, which represent the valve switches are monitored: Normally open component valves and normally closed component valves. These arrays are constantly compared to the component valve array in the main logic loop in an effort to verify that the valve indeed has completed the instructed.

System Valves. This is an 5 element boolean array: Vent, Vacuum, High Flow, Lo Flow, Manifold. This is used in the logic loop of the program to control when a given valve is open or closed. The data acquisition loop constantly monitors a local variable of this array to determine when a change has occurred so it may update Fieldpoint to carry out the instruction. In addition, as a result of Fieldpoint issuing a command to the valve, two more arrays, which represent the valve switches are monitored: Normally open system valves and normally closed system valves. These arrays are constantly compared to the system valve array in the main logic loop in an effort to verify that the valve indeed has completed the instruction.

In Spec? 8 Element boolean array that represents whether or not the desired component is within the tolerance determined by an range and range check algorithm

Eg.

Actual component weight = 100

Desired component weight = 99

Mix Tolerance = 1 (percent)

Mix Tolerance Divisor = 2

Tolerance range = ((Mix Tolerance/MixToleranceDivisor)/100)*Desired Weight)

The Tolerance range is added and subtracted to the desired weight to establish and acceptable range. A check calculation is also done to account for cases of tight tolerance ranges and errors such as scale drift do to a non-system anomaly.

(eg. user bumping the scale)

First Time? This is a boolean control that indicates that the system has completed its first full iteration. This is necessary to let certain procedures be executed on the first iteration. Upon reaching the state, "loop or cycle", if there is more than one component this boolean is set to false, which allows AcuGrav to bypass these initialization procedures.

Eg. There is no need to re-run the "system integrity state" on successive components as AcuGrav as already determined that the system is suitable.

High PSI? This boolean is flagged to true when the system pressure exceeds or is equal to the upper pressure limit of 1000 Torr.

Prev PSI. This double precision numeric holds the value of the pressure of the last iteration.

Notifier. notifier is a reference to an existing or newly created notifier.

This notifier is used by the error checking state machine to begin cycling. This allows the program to get stride before being subjected error evaluation.

Cyl Qty. Number of cylinders to be filled with indicated recipe. This is essential in calculating Cubic Feet, which in turn is essential for determining flow rate.

Total CF. This is the total cubic feet determined by cylinder quantity and cylinder volume.

EG.

2(quantity)* 150 = 300 cubic feet (CF)

Vac Low. This double precision floating variable represents the current Lo Vacuum channel reading in mTorr

Previous Man. Pressure Used in conjunction with a shift register to compare the difference in manifold pressure from one iteration to the next.

Gross leak start time. This value uses the system clock to establish a starting mark for a 60 second interval used to determine if all applicable system segments are able to achieve a less than 200 mTorr vacuum.

Scale Deltas. Cluster containing a 10 element array to serve as a buffer for the last 10 scale readings. It also contains an integer numeric control for the index of the buffer.

Vacuum Deltas. This cluster contains a circular array and digital control. The circular array is a 10 element array containing a values representing the difference of the actual measurement and the previous measurement taken. In a nut shell, it keeps track of the discrepancy in repetitive measurements.

Equalize Start Time. This value is a piece of code that is no longer current and is not used in the present version. It will probably be eliminated in future versions.

error out. The error out cluster passes error or warning information out of a VI to be used by other VIs.

The pop-up option Explain Error (or Explain Warning) gives more information about the error displayed.

status. The status boolean is either TRUE (X) for an error, or FALSE (checkmark) for no error or a warning.

The pop-up option Explain Error (or Explain Warning) gives more information about the error displayed.

code. The code input identifies the error or warning.

The pop-up option Explain Error (or Explain Warning) gives more information about the error displayed.

source. The source string describes the origin of the error or warning.

The pop-up option Explain Error (or Explain Warning) gives more information about the error displayed.

Running Params OUT

Fill Time. Time it takes to fill the cylinder. Continuously updated as cycle per gases.

Desired Weights. 8 element array for the desired weights relative to the inlet position.

Weights. Element of the Desired Weights Array. There are 8 elements in this array. Each one representing a corresponding intermediate or house gas.

Actual Weights. This is an 8 element array of current scale readings relative to the inlet position.

TABLE 1-continued

CLUSTERS OF INFORMATION AND DATA USED BY THE PROCESSOR FOR CONTROL AND STATUS INDICATIONS.
Weights. Element of Actual Weights Array.
Vac Hi. This double precision floating variable represents the current Hi Vacuum channel reading in Torr
System Pressure. Pressure(psig) of system not manifold. Used to take pressure readings that do not require the manifold valve to be open. The reason for this is that in between component additions it is necessary to isolate the main system from the manifold in order to prepare the system for the next addition. Also, this allows AccuGrav to confirm that the next component is of sufficient pressure to complete the desired addition and avoid back flow.
Manifold PSI. Pressure(psig) of manifold not the system. Used to determine the actual pressure in the manifold and/or the cylinders. Used to determine if next component to be added has sufficient pressure.
Eg: The next component is at least 100 psig greater than the current manifold pressure.
Mix Tolerance. This a user input as a double precision numeric that determines the tolerance to which the mix should be produced. In addition, this variable is used in other areas of the program which correlate mixture tolerance with rate of change of the Metler balance.
Previous Weight. This number is a double precision floating value which represents the scale reading on the programs last iteration.
Control Valve. This is a double precision numeric control that outputs the mAmp value to the control value.
Purge Gas. Enumerated type that returns the Purge gas used in the system. May be one of the following: CO(2), He, Ar, N(2)
Current Component. Integer scalar variable used to index the following arrays: Desired Weights and Actual Weights.
Component Valve. This is an 8 element boolean array: int1, int2, int3, int4, CO(2), He, Ar, N(2). This is used in the logic loop of the program to control when a given valve is open or closed. The data acquisition loop constantly monitors a local variable of this array to determine when a change has occurred so it may update Fieldpoint to carry out the instruction. In addition, as a result of Fieldpoint issuing a command to the valve, two more arrays, which represent the valve switches are monitored: Normally open component valves and normally closed component valves. These arrays are constantly compared to the component valve array in the main logic loop in an effort to verify that the valve indeed has completed the instructed.
System Valves. This is an 5 element boolean array: Vent, Vacuum, High Flow, Lo Flow, Manifold. This is used in the logic loop of the program to control when a given valve is open or closed. The data acquisition loop constantly monitors a local variable of this array to determine when a change has occurred so it may update Fieldpoint to carry out the instruction. In addition, as a result of Fieldpoint issuing a command to the valve, two more arrays, which represent the valve switches are monitored: Normally open system valves and normally closed system valves. These arrays are constantly compared to the system valve array in the main logic loop in an effort to verify that the valve indeed has completed the instruction.
In Spec? 8 Element boolean array that represents whether or not the desired component is within the tolerance determined by an range and range check algorithm Eg. Actual component weight = 100 Desired component weight = 99 Mix Tolerance = 1 (percent) Mix Tolerance Divisor = 2 Tolerance range = ((Mix Tolerance/MixToleranceDivisor)/ 100)*Desired Weight) The Tolerance range is added and subtracted to the desired weight to establish and acceptable range. A check calculation is also done to account for cases of tight tolerance ranges and errors such as scale drift do to a non-system anomaly. (eg. user bumping the scale)
First Time? This is a boolean control that indicates that the system has completed its first full iteration. This is necessary to let certain procedures be executed on the first iteration. Upon reaching the state, "loop or cycle", if there is more than one component this boolean is set to false, which allows AcuGrav to bypass these initialization procedures. Eg. There is no need to re-run the "system integrity state" on successive components as AcuGrav has already determined that the system is suitable.

TABLE 1-continued

CLUSTERS OF INFORMATION AND DATA USED BY THE PROCESSOR FOR CONTROL AND STATUS INDICATIONS.
High PSI? This boolean is flagged to true when the system pressure exceeds or is equal to the upper pressure limit of 1000 Torr.
Prev PSI. This double precision numeric holds the value of the pressure of the last iteration.
Notifier. notifier is a reference to an existing or newly created notifier. This notifier is used by the error checking state machine to begin cycling. This allows the program to get stride before being subjected error evaluation.
Cyl Qty. Number of cylinders to be filled with indicated recipe. This is essential in calculating Cubic Feet, which in turn is essential for determining flow rate.
Total CF. This is the total cubic feet determined by cylinder quantity and cylinder volume. EG. 2(quantity)* 150 = 300 cubic feet (CF)
Vac Low. This double precision floating variable represents the current Lo Vacuum channel reading in mTorr
Previous Man. Pressure. Used in conjunction with a shift register to compare the difference in manifold pressure from one iteration to the next.
Gross leak start time. This value uses the system clock to establish a starting mark for a 60 second interval used to determine if all applicable system segments are able to achieve a less than 200 mTorr vacuum.
Scale Deltas. Cluster containing a 10 element array to serve as a buffer for the last 10 scale readings. It also contains an integer numeric control for the index of the buffer.
Vacuum Deltas. This cluster contains a circular array and digital control. The circular array is a 10 element array containing a values representing the difference of the actual measurement and the previous measurement taken. In a nut shell, it keeps track of the discrepancy in repetitive measurements.

TABLE 2

CONTROL VALVE ADJUSTMENT LOGIC PERFORMED BY BADGER CONTROL ROUTINE

IF (DESIRED WEIGHT) of the (CURRENT COMP) (−) the (ACTUAL WEIGHT) (×) .01 is >/ to the (ACTUAL WEIGHT) (−) (PREVIOUS WEIGHT)
OR
The (SCALE DELTAS) is = 0
THEN "State Machine Cycles"
ELSE (DESIRED WEIGHT) of the (CURRENT COMP) (−) the (ACTUAL WEIGHT) (×) .01 is </ to the (ACTUAL WEIGHT) (−) (PREVIOUS WEIGHT)
OR
The (SCALE DELTAS) is > 0
THEN
IF (ACTUAL WEIGHT) (−) (PREVIOUS WEIGHT) is < the (DESIRED WEIGHT) (−) (ACTUAL WEIGHT) (×) .01
THEN
IF (CONTROL VALVE) value is >/ .02 "Valve is wide open"
ELSE Add (mA ADJUSTMENT) to (CONTROL VALVE)
IF (ACTUAL WEIGHT) (−) (PREVIOUS WEIGHT)
is < the (DESIRED WEIGHT) (−) (ACTUAL WEIGHT) (×) .01
THEN
IF (CONTROL VALVE) value is </ .004 "Valve is closed"
ELSE Subtract (mA ADJUSTMENT) from (CONTROL VALVE)

What is claimed:

1. In a computer controlled system for filling a cylinder with a gas, the system including (a) a source of gas, (b) a plurality of valves for controlling flow of the gas to the cylinder, (c) a transducer for measuring pressure of the gas flowing to the cylinder, and (d) a weight scale for determining weight of the cylinder when filling the cylinder with the gas,

a method of filling the cylinder with a target weight of the gas comprising the steps of:

(a) successively measuring the weight of the cylinder at periodic time intervals to obtain successive actual weights of the cylinder;

(b) opening a first valve and filling the cylinder with the gas at a high flow rate;

(c) closing the first valve after reaching a predetermined weight difference between the target weight and an actual weight;

(d) after step (c), opening a second valve and filling the cylinder with the gas at a low flow rate;

(e) after step (d), controlling by an adjustable valve, flow of the gas to the cylinder;

(f) differencing each successive actual weight measured in step (a) from the target weight of the gas to obtain a plurality of first difference values;

(g) differencing adjacently measured actual weights obtained in step (a) to obtain a plurality of second difference values; and

(h) controlling, by the adjustable valve, flow of the gas to the cylinder based on each first difference value and a corresponding second difference value.

2. The method of claim **1** in which step (h) includes

multiplying each first difference value by a constant value to obtain a respective scaled first difference value,

comparing a scaled first difference value with a corresponding second difference value, and

adjusting flow of the gas to the cylinder based on the comparison.

3. The method of claim **2** in which

step (g) includes logging into a buffer the plurality of second difference values; and

step (h) includes either of the following sub-step (i) or sub-step (ii):

(i) maintaining flow of the gas to the cylinder, if the plurality of second difference values stored in the buffer are greater than the corresponding first scaled difference values; or

(ii) adjusting flow of the gas to the cylinder, if the plurality of second difference values stored in the buffer are less than the corresponding first scaled difference values.

4. The method of claim **3** in which

sub-step (ii) includes sending a reduced current value to the adjustable valve to reduce the rate of flow of gas to the cylinder.

5. The method of claim **4** in which the reduced current value is based on a user mix tolerance value, and

the reduced current value sent to the adjustable valve is a first current value if the user mix tolerance value is less than or equal to 1 percent, and is a second current value if the user mix tolerance is greater than 1 percent, the first current value being smaller than the second current value.

6. The method of claim **5** in which the first current value is 0.00001 milliamperes, and the second current value is 0.0001 milliamperes.

7. The method of claim **1** including the steps of:

(i) establishing a tolerance range value between the target weight of the gas cylinder and a measured actual weight of the gas cylinder; and

(j) rejecting the gas cylinder if the actual weight of the gas cylinder is outside the established tolerance range value;

wherein the tolerance range value is based on a ratio of a user mix tolerance value and a mix tolerance divisor, the mix tolerance divisor being a first value when a pressure of the gas supplied to the cylinder is greater than 1000 psig and a second value when the pressure of the gas supplied to the cylinder is less than 1000 psig, the first value being larger than the second value.

8. In a computer controlled system for filling cylinders with at least one gas, including multiple valves for controlling flow of respective gasses to the cylinders, a method of controlling filling of the cylinders comprising the steps of:

(a) storing valve command data in a first array;

(b) communicating the stored valve command data to the valves;

(c) monitoring status of each of the multiple valves;

(d) waiting a predetermined time after communicating the stored valve command data to the valves in step (b);

(e) storing the status of the valves in a second array, after waiting the predetermined time in step (d);

(f) comparing the valve command data stored in the first array with the valve status stored in the second array; and

(g) continuing filling of the cylinders with the gas based on the comparison in step (f).

9. The method of claim **8** in which

step (f) includes determining if the valve status stored in the second array corresponds to the valve command data stored in the first array; and

step (g) includes stopping the filling of the cylinders, if the comparison determines that the valve status is different from the valve command data.

10. The method of claim **8** further including the step of:

(h) displaying the valve status on a screen.

11. The method of claim **8** further including the steps of:

(h) displaying the multiple valves on a screen; and

(i) programming virtual instruments to control the multiple valves and displaying the virtual instruments on the screen; and in which

step (b) includes communicating the stored valve command data to the multiple valves using the virtual instruments.

12. The method of claim **11** in which

programming the virtual instruments includes configuring the virtual instruments on the screen using G programming language.

13. In a computer controlled system for filling a cylinder with a gas, the system including (a) a source of gas, (b) at least one valve for controlling flow of the gas to the cylinder, (c) a transducer for measuring pressure of the gas flowing to the cylinder, and (d) a weight scale for determining weight of the cylinder when filling the cylinder with the gas,

a method of filling the cylinder to a target weight of gas comprising the steps of:

(a) successively measuring the weight of the cylinder to obtain successive actual weights of the cylinder;

(b) opening a first valve and filling the cylinder with the gas at a high flow rate;

(c) closing the first valve after reaching a predetermined weight difference between the target weight and an actual weight;

(d) after step (c), opening a second valve and filling the cylinder with the gas at a low flow rate; and

(e) after step (d), controlling by a third valve, a flow of gas to the cylinder;

wherein controlling by the third valve includes reducing the flow of gas to the cylinder, if a difference value

between successive actual weights of the cylinder is smaller than a predetermined value.

14. The method of claim **13** in which

step (c) includes closing the first valve after reaching a weight difference of 30 grams or less between the target weight and the actual weight.

15. The method of claim **14** including the step of:

(f) measuring pressure of the gas flowing to the cylinder; and

step (c) includes closing the first valve after measuring 1000 psi of pressure.

16. The method of claim **13** in which reducing the flow of gas to the cylinder includes

adjusting an amount of gas flowing through the third valve by a first value, if a user mix tolerance value is less than or equal to one percent, and

adjusting the amount of gas flowing through the third valve by a second value, if the user mix tolerance value is greater than one percent.

17. The method of claim **16** in which control current is sent to the third valve to control the amount of gas flowing to the cylinder; and

the first value for adjusting the amount of gas flowing through the third valve is 0.00001 milliamperes, and

the second value is 0.001 milliamperes.

18. The method of claim **16** in which reducing the flow of gas to the cylinder includes periodically adjusting the third valve until a difference between the target weight and the actual weight is less than or equal to 0.1 grams.

19. The method of claim **13** wherein the first valve is closed after reaching a 30 gram weight difference between the target weight and the actual weight, and the second valve is opened to fill the cylinder at the low flow rate.

20. The method of claim **13** wherein step (a) includes successively measuring the actual weight of the cylinder at a periodic rate of 10 sample measurements per second.

* * * * *