Oct. 22, 1935. E. A. ROCKWELL 2,018,150

FUEL PUMP

Original Filed Feb. 1, 1930

Fig. 1.

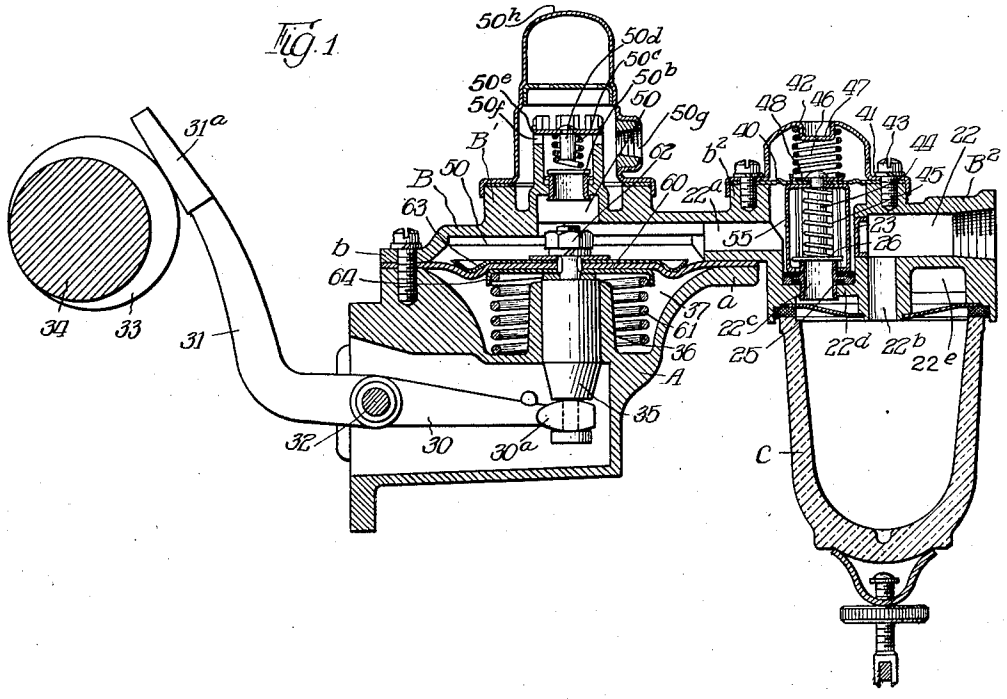

Fig. 2.

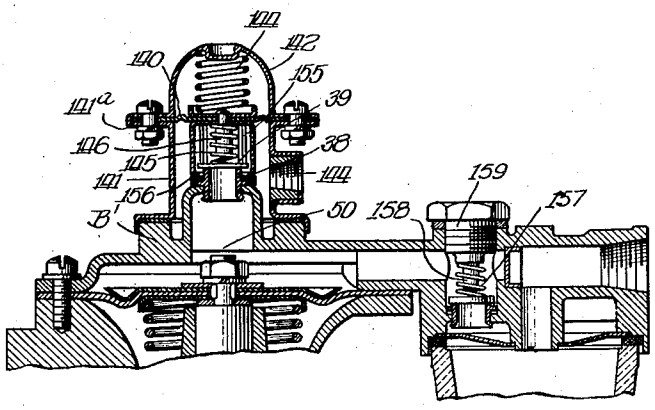

Fig. 3.

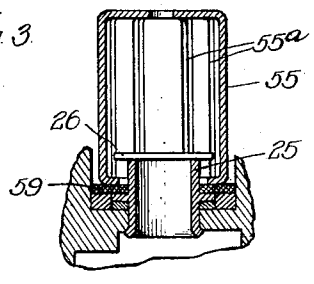

Inventor:
Edward A. Rockwell,
By Wilkinson, Huxley, Byron and Knight.
Attys.

Patented Oct. 22, 1935 2,018,150

UNITED STATES PATENT OFFICE

2,018,150

FUEL PUMP

Edward A. Rockwell, Chicago, Ill., assignor to General Motors Corporation, Detroit, Mich., a corporation of Delaware

Application February 1, 1930, Serial No. 425,107
Renewed August 23, 1933

2 Claims. (Cl. 103—40)

The purpose of this invention is to provide an improved apparatus for moving liquid from a source to a place of use, particularly adapted for supplying fuel to an internal combustion engine from a relatively low-level source of supply. A specific purpose is to adapt the construction, which is of the general nature of a pump, to furnish a variable supply of fuel corresponding to varying engine requirement under substantially uniform pressure, without materially varying the feeding stroke of the pump, but, on the contrary, with the pumping member making substantially unvarying feeding as well as intage strokes. To accomplish this there is provided a relief valve which opens as one of the pump valves when a predetermined pressure is attained in the fuel line and there is also provided a vapor trap chamber to act as a cushion to prevent the incoming column of liquid from opening the pump valves by the force of the moving column of fuel.

Formerly constant stroke pumps intended to deliver fuel to the float chamber of a carbureter have been provided with relief valves for limiting the maximum outlet pressure which may be attained and in general such valves act to recirculate the excess fuel back to the source of supply. But if such valves open towards the suction the action is undesirable since changes in the supply level will vary the pressure at which the relief valve opens since the suction assists in opening the valve and the delivery pressure cannot in some cases be lower than the maximum suction attained.

According to my invention the relief valve is opened at a predetermined pressure, which may be readily adjusted, and which is independent of the suction developed.

It is an object of the invention to provide a form of construction that may be employed to open a relief valve or may serve to positively open either the inlet or outlet valves of the pump which perform their normal functions of permitting only one way flow except when held open by the pressure limiting means. The pump then acts to oscillate the fuel back and forth in the supply or delivery lines without delivering any more fuel to the float chamber until the level drops therein.

The invention consists in the elements and features of construction shown and described as indicated in the claims.

In the drawing:—

Figure 1 is a vertical section of a pumping apparatus embodying this invention,

Figure 2 is a partial section of a modified arrangement, and,

Figure 3 is a partial detail section of the valve lifting means illustrated in Figure 1.

Referring to the structure in general, without identifying the parts in detail:—It consists of a pump casing composed of two main members, the first of which is arranged for mounting on the casing of the engine served, with the mouth of the pump casing cavity registered with an aperture of the engine casing, and having mounted in it means by which an engine cam actuates the pumping member in the intake stroke, and a spring reacting on the pumping member for its feeding stroke. The second casing member contains the pumping chamber and has the inflow and outflow passages. The pumping member is shown as a flexible diaphragm held to the two casing members by its margin clamped between mated faces of said casing members, which have in their said mated faces respectively, recesses forming chambers partitioned by the diaphragm which constitutes the pumping member, the recess in the first or lower casing member serving to accommodate the spring mentioned for reacting on the diaphragm for its feeding stroke, and the recess in the upper pump casing member constituting the pumping chamber. Said upper casing member has a wing or extension from one side, overhanging with respect to the lower member at the outer side of the latter, at the under side of which there is mounted a fuel receiving and sediment trapping chamber which constitutes part of the fuel supply or inflow line antecedent to the pump chamber, and hereinafter referred to as a pre-pump fuel receiving chamber.

The second casing member contains inflow and outflow passages in which the intake and discharge valves are located, opening for one way flow through the pumping chamber and seating against reverse flow.

The characteristic feature of the structure consists in the provision of movable wall members—flexible diaphragms—exposed to the discharge pressure and operatively related to the intake and discharge valves respectively for holding said valves open, permitting reverse flow when the pressure exceeds a predetermined degree, suitable for maintaining the desired pressure in the delivery line to the carbureter; so that when a given feeding stroke produces a pressure exceeding that predetermined degree the discharge valve, for example, does not close in the succeeding reverse stroke, but remaining open permits the liquid advanced at the preceding stroke to

recede from the delivery line back into the pumping chamber, and until engine consumption reduces the pressure in the delivery line to the predetermined degree, which may be spoken of as the normal pressure, the alternating intake and discharge strokes of the pumping member operate only to move a unit quantity of liquid back and forth into and out of the pumping chamber. Or, under like conditions,—when the normal pressure is exceeded by a given feeding stroke,—that pressure operates to open and hold open the intake valve, so that the succeeding pumping strokes oscillate the unit quantity of liquid back and forth in the intake passage past the open intake valve.

The result, it will be recognized may be accomplished by providing either the inlet or outlet valve or an independent relief valve with the means for holding it open under conditions of pressure exceeding the normal desired pressure. It may be further understood that both the inlet and outlet valves may be so equipped so that if one means fails to operate the other will function to relieve the pressure.

Referring to the drawing in detail, Figure 1:—

The first or lower pump casing member, A, affords a fulcrum at **32** for the lever, **30**, **31**, of which the arm, **30**, extends in the horizontal cavity, **21**, of said member, A, and the arm, **31**, protrudes into the engine casing, and has the wear piece terminal, **31a**, reaching and cooperating with cam, **33**, on the engine shaft, **34**. The opposite end of the lever arm, **30**, is forked, as seen at **30a**, for engaging the lower end of the stem, **35**, of the pumping member,—the diaphragm, **60**—, said stem having guide bearing in the boss, **36**, which extends up from the bottom of the upwardly open frusto-conical cavity, **37**, formed by a recess in the upper flat face of the member, A, which recess accommodates the spring, **61**, stopped at its lower end at the bottom of said frusto-conical cavity, and reacting upwardly on the diaphragm, **60**, for giving the latter its feeding movement.

The second or upper pump casing member, B, having at its lower side the flat face, bounded by the annular flange, *b*, mating the flange, *a*, of the lower member, A, for clamping the diaphragm between said two casing members, has in said lower face the recess, **50**, which accommodates the feeding movement of the diaphragm, **60**; and said member, B, has an upwardly projecting boss, B^1, in which said recess, **50**, is extended, as seen at **50a**, to accommodate the movement of the nut, **62**. The boss B^1 also carries therein an outlet valve **50b** pressed downwardly by a spring **50c** on a stem **50d** supported on a plate **50e** secured to the boss B^1 while leaving outlet ports **50f** free to convey the fuel to the outlet feed opening **50g** in a vapor dome **50h**. The stem, **35**, is secured to the diaphragm, clamped between the upper and lower reinforcing disks, **63**, **64**, of which the latter, being cupped,—downwardly flanged,—serves for seating the upper end of the spring, **61**. In the horizontal extension, B^2, of the casing member, B, there is formed, bored or cored, aligned horizontal passages, **22**, **22a**, the latter discharging into the pumping chamber, and both said passages constituting the parts of the fuel inflow line. Said inflow line comprises also a downwardly extending passage, **22b**, leading from the passage, **22**, downwardly a considerable distance into the fuel receiving and trapping chamber, C, hereinafter more particularly described, thereby forming a vapor trap space **22e** and an upwardly extending passage, **22c**, leading back into said horizontal passage, **22a** from a level below the top of the vapor trap space **22e**. Between said passages, **22**, **22a**, and between the openings therefrom and thereinto of the passages, **22b** and **22c**, there is interposed a blockade, **23**, consisting of a stamping forced into the counterbore, **22**. The passage, **22c**, is formed by a bore from the upper side intersecting the passage **22a**, said bore being counterbored to form a shoulder at **22d**, for stopping the valve seat member, **25**, which is tight-fitted in said bore below said shoulder, and at its upper end forms a seat for the intake valve, **26**.

The extension, B^2, has at the upper side a short upwardly protruding circular boss, b^2, co-axial with the passage, **22c**, and the counterbore thereof, and said counterbore is closed at the upper end by a diaphragm, **40**, clamped in place on the upper side of the boss, b^2, by the flange, **41**, of a cap or hood, **42**, secured by screws, **43**. This diaphragm carries by securement thereto at its center a downwardly projecting pin, **44**, which terminates at suitable distance above the valve, **26**, to properly limit the opening movement of the valve; and a spring, **45**, coiled around said pin and stopped at the upper end at the under side of the diaphragm, reacts at the lower end on the valve, **26**, for holding the valve normally seated. Above the diaphragm in the hood, **42**, there is provided a spring, **46**, positioned and held centrally with respect to the diaphragm by a downwardly struck boss, **47**, at the upper end of the hood, and reacting at its lower end on the diaphragm, the latter having its central area reinforced by a disk, **48**, at the upper side, and a part, **55**, hereinafter more particularly described and referred to, as the valve lifter at the lower side, where the upper end or head of said valve lifter affords seat for the upper end of the spring, **45**. Upon considering this construction it will be observed that the spring, **46**, under conditions of pressure below the diaphragm equal to that exerted by the spring on the upper side, the diaphragm and spring co-operate to position the pin, **44**, for permitting and properly limiting the opening movement of the valve, **26**; and that in case of super-atmospheric pressure in the pumping chamber and inflow passage on the under side of this diaphragm in excess of that exerted by the spring at the upper side, the diaphragm will be flexed upwardly, permitting increased opening of the valve, **26**.

The valve lifter, **55**, may be described as a piece of tubing, closed at one end excepting for the aperture at which the pin, **44**, is secured to the diaphragm, said tube being flanged inwardly at the lower end and longitudinally rifted as to its cylindrical part from a point a short distance below the upper closed end through the lower flanged end, so that the cylindrical body of the tube is reduced to a plurality of parallel fingers, **55a**, as seen most clearly in Figure 3. The interior diameter of the cylinder, of which this valve lifter, **55**, is formed, is somewhat greater than the diameter of the valve, **26**, and the inner diameter of the inturned flange, forming the terminals of the multiple fingers mentioned is enough less than the diameter of said valve, so that when the parts are assembled, as seen in Figure 3 said inturned terminals of the finger protrude under the margin of the valve around the valve seat member, **25**; and at the normal position of the diaphragm, **40**, that is, in the absence of super-atmospheric pressure in the intake passage, **22a**, said finger terminals are stopped on an annular leather disk, **59**, which is provided encompassing the valve seat member, **25**, for thus stopping the valve lifter and preventing noise in the operation.

Upon considering the construction as described, it may be understood that the spring, **46**, is initially conditioned for the reaction on the diaphragm, **40**, with the valve lifter stopped at its lower end, as described, and the diaphragm horizontal, to resist the upper movement of the diaphragm which might be caused by pressure in the intake passage to a predetermined degree, and to yield upwardly against the reaction of the spring, **46**, when the pressure exceeds that degree. And when the diaphragm is forced upwardly by such excess pressure, it will be seen that the valve lifter, **55**, carried by it, will lift the valve, **26**, from its seat and will hold it open so long as the excess pressure continues. The construction thus operates in the manner and for the purpose above described, that is, so that when the pressure in the delivery line, due to the feeding stroke of the pumping member, exceeds the degree for which the spring, **46**, is conditioned in the assembling of the structure, the valve is held open and the subsequent vibration of the diaphragm will operate only to oscillate a unit quantity of liquid back and forth past the valve, **26**, without forcing any fuel into the delivery line so long as the pressure therein remains exceeding the predetermined degree for which the spring, **46**, is conditioned. The vapor trap space 22^e prevents the force of the incoming column of liquid from lifting the valve.

A corresponding provision with respect to the outlet valve may be seen in the fragmentary Figure 2 where it may be seen that the upwardly protruding boss, B^1, through which the discharge passage leads from the recess, **50**, through the valve seat member, **38**, mounted at the upper end of the boss, is continued past the valve, **39**, which seats at the upper end of said valve seat member in the annular space around the upper end of the boss, which is enclosed by a shell, **141**, said shell being in general cylindrical in form, and flanged at its lower end for seating upon and clamping the boss, B^1, and at its upper end having an exterior flange, 141^a, and having its upper end closed by a diaphragm, **140**, held in place by a cap, **142**, flanged for seating upon the upper end flange of the shell and clamping the margin of the diaphragm between said flanges. This shell has a lateral opening, **144**, at which it is provided with means for pipe connection constituting the delivery line leading to the carbureter.

The diaphragm, **140**, carries at its center a pin, **146**, extending downwardly for limiting the opening movement of the valve, **38**, and positioning and guiding the spring, **145**, which reacts between the diaphragm at the upper end and the valve at the lower end, for holding the valve normally seated. Secured to the diaphragm at the lower side thereof, and serving for reinforcing the central portion of the diaphragm, is a valve lifter, **155**, similar to the intake valve lifter, **55**, having inturned fingers, **156**, at the lower end for engaging under the valve, **38**, to lift it from its seat. A spring, **144**, is mounted in the cap, **142**, reacting on the diaphragm, **140**, for resisting upward flexure of the diaphragm, which will be caused when the pressure in the delivery line due to the feeding stroke of the pumping member of the diaphragm, **60**, exceeds the reaction of said spring, **144**, said spring being conditioned for said reaction to yield only to pressure exceeding the predetermined degree desirable for maintaining the proper pressure on the fuel delivery line to the carbureter. In this construction the pump inlet valve **26** is pressed downwardly by a spring **157** on a pin **158** carried on a screw plug **159** in the extension B^2.

It will be recognized that this construction operates in the same manner as that associated with the intake valve already described; that is to say, upon the pressure in the delivery line exceeding the predetermined degree, the diaphragm, **140**, will operate for lifting the valve, **38**, from its seat and holding it open so long as the pressure thus exceeds the predetermined degree.

I claim:

1. A fuel pump comprising a casing having a pumping chamber therein, a constant stroke pumping member cooperating with said pumping chamber, an outflow passage leading upwardly from said pumping chamber, a check valve in said passage adapted to seat vertically against the direction of fuel flow, the flow passage beyond the check valve forming a pressure chamber, a flexible diaphragm forming a movable sealing wall at the top of said pressure chamber, a valve lifter having inturned fingers extending beneath said check valve arranged to move with said diaphragm, a securing member for clamping the valve lifter to the central portion of said diaphragm, said securing member having a depending stem-shaped extension, a compression spring surrounding said stem-shaped extension and reacting upon said check valve to normally hold said check valve in seated position, a hood member enclosing the exterior of said diaphragm and clamping the marginal edge thereof, said hood member having a centrally depressed portion, a second compression spring adapted to be positioned by the hood depression and reacting upon said diaphragm whereby the check valve opens upon each discharge stroke of the pumping member and closes upon each suction stroke until the fuel pressure in the pressure chamber reacting upon the diaphragm reaches a predetermined amount whereupon the diaphragm and valve lifter are moved to hold the check valve open and prevent further delivery of fuel.

2. In a construction as described in claim 1, a fuel delivery connection communicating laterally with the pressure chamber below the top of said pressure chamber whereby vapor is trapped under pressure immediately beneath the diaphragm and the fuel does not come in contact with the diaphragm.

EDWARD A. ROCKWELL.