(12) PATENT
(19) AUSTRALIAN PATENT OFFICE

(11) Application No. AU 199524221 B2
(10) Patent No. 702747

(54) Title

Tool holder for inserts, including a ribbed clamping surface

(51)[6] International Patent Classification(s)
B23B 027/16 B23C 005/20

(21) Application No: 199524221 (22) Application Date: 1995.04.18

(87) WIPO No: WO95/29026

(30) Priority Data

| (31) Number | (32) Date | (33) Country |
|---|---|---|
| 9401429 | 1994.04.27 | SE |

(43) Publication Date : 1995.11.16
(43) Publication Journal Date : 1996.01.04
(44) Accepted Journal Date : 1999.03.04

(71) Applicant(s)
Sandvik AB

(72) Inventor(s)
Lennart Bystrom; Jorgen Wiman

(74) Agent/Attorney
GRIFFITH HACK,GPO Box 1285K,MELBOURNE VIC 3001

(56) Related Art
WO 89/1136
DE 2547102C2
DE 3446455

OPI DATE 16/11/95 APPLN. ID 24221/95
AOJP DATE 04/01/96 PCT NUMBER PCT/SE95/00414

AU9524221

(51) International Patent Classification 6 :
B23B 27/16, B23C 5/20

A1

(11) International Publication Number: WO 95/29026

(43) International Publication Date: 2 November 1995 (02.11.95)

(21) International Application Number: PCT/SE95/00414

(22) International Filing Date: 18 April 1995 (18.04.95)

(30) Priority Data:
9401429-7 27 April 1994 (27.04.94) SE

(71) Applicant (*for all designated States except US*): SANDVIK AB [SE/SE]; S-811 81 Sandviken (SE).

(72) Inventors; and
(75) Inventors/Applicants (*for US only*): BYSTRÖM, Lennart [SE/SE]; Zinkgatan 1, S-811 52 Sandviken (SE). WIMAN, Jörgen [SE/SE]; Kurrasbacken 11, S-811 52 Sandviken (SE).

(74) Agent: ASPEBY, Magnus; Sandvik AB, Patent Dept., S-811 81 Sandviken (SE).

(81) Designated States: AU, BR, CA, CN, JP, KR, MX, PL, RU, US, European patent (AT, BE, CH, DE, DK, ES, FR, GB, GR, IE, IT, LU, MC, NL, PT, SE).

Published
*With international search report.*
*In English translation (filed in Swedish).*

(54) Title: TOOL HOLDER FOR INSERTS, INCLUDING A RIBBED CLAMPING SURFACE

(57) Abstract

A fastening arrangement for cutting inserts on insert holders for cutting machining of metals is arranged in such a way that it comprises parallel grooves (11) on the underside of the insert and ribs (4) on the insert holder (2), the ribs matching into the grooves. The cutting insert is screwed upon the holder, whereby a wedge effect is attained between the grooves and the ribs because the insert's underside does not abut against the plane part surfaces (7) between the ribs, and because the tops of the ribs are not in contact with the bottoms of the grooves.

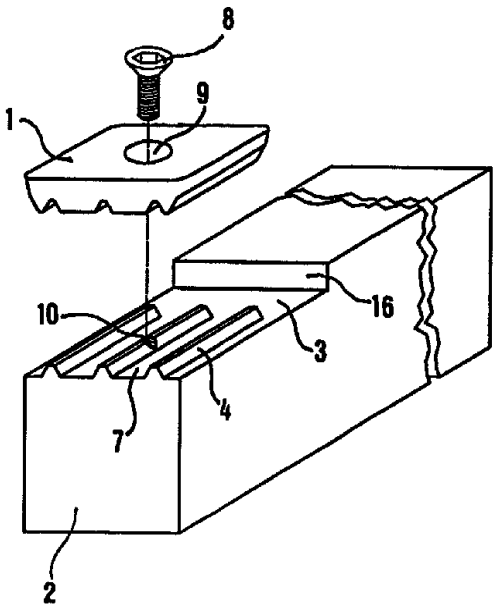

# TOOL HOLDER FOR INSERTS, INCLUDING A RIBBED CLAMPING SURFACE

The present invention relates to an arrangement for the fastening of cutting inserts on insert holders for the cutting machining of primarily metals.

Different cutting inserts and indexable inserts are fastened on tool holders in several different, known ways. The most common is that the insert has a through central hole and that the insert pocket in the holder has a threaded hole. A locking screw is inserted into the centre hole of the insert and is screwed into the hole of the holder by a suitable torque, a shim with a centre hole often being threaded on the screw and placed between the insert and the bottom support surface. Usually, the cutting insert also comprises two internally substantially perpendicular abutment surfaces, or three abutment points, for abutting against two of the insert's side surfaces. The disadvantage with this construction is that a certain loose easily occurs after a certain time of use. A further drawback is that one may easily tighten the screw too heavily, thereby damaging it or even causing a rupture.

Other known insert holders have a clamp or similar fastening arrangement, that presses upon the upper side of the insert in order to clamp it in the insert pocket. The pressure force of the clamp can be regulated by a screw. Such constructions may for instance be used for fastening cutting inserts without any central hole, which is the case for inter alia cutting-off inserts.

In order to avoid any play and attain a more stable fastening in general of a cutting insert, constructions have been suggested according to which the lower side of the cutting insert and the bottom support surface have been formed as ribbed surfaces intended to match each other. Such a construction is disclosed in US-A-2 140 941 and another in US-A-2 453 464. However, a drawback of these embodiments is that they necessitate a very considerable amount of grinding of the ribbed surface of either the cutting insert or the holder, or both. A further drawback is that, even if the insert has been secured in a direction perpendicular to the ribs, a vertical

play may arise in these constructions just as easily as for two wholly planar abutment surfaces, particularly at machining operations with a tendency to vibrations.

In US-A-4 437 802 it is described how a cutting insert is fastened on a drill, the cutting insert comprising two grooves and the support surface of the drill two corresponding ribs, which are to fit exactly into the grooves and occupy their whole cross-sectional area. Again, the problem is that an axial play may easily arise, particularly if the drill is submitted to vibrations. Moreover, a considerable grinding is required either of the ribs or of the grooves, in order to attain the necessary dimension accuracy.

Thus, a primary object of the present invention is to provide an arrangement for obtaining a stable and play-free fastening of cutting inserts on insert holders, for instance also in the case where the insert has been submitted to vibrations for a long time.

A second object of the present invention is to attain a stable and play-free fixing of cutting inserts on insert holders without any costly and time-consuming grinding.

A third object of the present invention is to avoid the necessity of abutment surfaces or points in the insert pocket, which require a high dimension accuracy.

According to the present invention there is provided an arrangement for fastening a cutting insert on an insert holder, the arrangement including, a bottom surface of the insert having substantially parallel grooves, and a holding surface of the insert holder having corresponding, substantially parallel ribs which are intended to fit into said grooves, characterised in that

AUSTRALIAN PATENT OFFICE

there is a gap(s) between the bottom surface of the cutting insert and the holding surface when the cutting insert is mounted in the holder, the grooves of the cutting insert are directly pressed and not ground, and the distance between two adjacent grooves measured perpendicularly to the grooves and the width of a groove measured level with the bottom surface of the cutting insert is between 1:1 and 4:1.

According to the present invention there is also provided a cutting insert adapted to be fastened on a ribbed supporting surface, the insert comprising a top surface and a bottom surface, the top surface having cutting edges; the bottom surface including parallel grooves separated by parallel truncated ribs each groove; including side surfaces diverging toward the bottom surface; each rib including side surfaces converging downwardly toward the bottom surface and defined by the side surfaces of adjacent ones of the grooves; each groove having a maximum width at the bottom surface; adjacent grooves being spaced apart by a distance; a ratio of the distance to the maximum width being at least about 1:1 and no more than about 4:1.

Some preferred embodiments of the invention will now be further described with reference to the appended drawings. These are presented herewith:

Figure 1 shows a holding arrangement according to the present invention in a perspective view obliquely from above.

Figure 2 shows a cross-section of a cutting insert and a holder according to the present invention.

Figure 3 shows an insert holder according to the

AUSTRALIAN PATENT OFFICE

present invention straight from above.

Figure 4 shows the same cross-section of a cutting insert as in Figure 2.

Figure 5 shows the same cross-section of an insert

AUSTRALIAN PATENT OFFICE

holder as in figure 2.

Figure 6 shows the bottom side of a cutting insert that has been formed according to the present invention, in a perspective view obliquely from above.

Figure 7 shows the top side of the same cutting insert as in figure 6, in a perspective view obliquely from above.

In the figures a cutting insert is designated by 1 or 1' and a holder by 2 or 2'. The cutting insert is made of a suitable hard material, such as coated or uncoated cemented carbide. Also some ceramics and cubic boron nitride may be used. In first hand, the invention is intended for different turning applications, such as longitudinal turning, copying, grooving and parting-off, but it may advantageously also be used for the fastening of milling cutting inserts.

The upper front part of the holder 2 is provided with a plane holding surface 3. On the holding surface are provided elongated ribs 4, which are internally substantially parallel. According to figure 1, the ribs extend backwardly from the front surface of the holder and substantially parallel with the longitudinal extension of the holder. However, in principle the ribs may present any arbitrary direction, for instance perpendicularly to the one shown in figure 1. At least that part of the ribs 4 which come into engagement with the insert has a basically constant cross-sectional geometry. This geometry has the form of a trapezoid or more precisely, the form of a truncated, equally sided triangle, whose shape is defined by two side surfaces 5 and a top surface 6. The transition between a side surface 5 and the holding surface 3 is either accomplished along a distinct break line or along a fillet with a small radius, which should be located outside the contact area to the cutting insert 1, 1'. The top angle $\alpha$ of the ribs is suitably between 40 and 80°, preferably between 50 and 70° and in particular between 55 and 65°. Between the ribs extend the part surfaces 7 of the holding surface 3, which are substantially plane and have a width that suitably corresponds to between 1 and 4 times the base width of the ribs, preferably between 1½ and 2½. The ribs may extend the whole way to the

rear border line of the holding surface; however, due to production-technical reasons it is suitable that the ribs terminate a distance before this border line, preferably via a short transition part where the height of the ribs gradually decreases and finally disappears.

The cutting insert 1, 1' is fastened by a locking screw 8, which is first introduced through the insert's central hole 9 and is then screwed into the threaded hole 10 in the holder 2. Suitably, the centre line of this hole is situated on the longitudinal centre line of a rib. The bottom side of this insert is formed with substantially parallel grooves 11 intended to accomodate the ribs 4. An essential feature of this invention is that these grooves 11 are directly pressed before the sintering of the cemented carbide or another hard material and thus not ground. They have a sector angle which exactly corresponds to the top angle $\alpha$ of the ribs or that is somewhat smaller than that, however not by more than about 2°, preferably 1°. Of production-technical reasons, the bottoms of the grooves are preferably rounded; of course the rounded part 12 should not intrude upon the side surfaces 13 of the ribs, which surfaces will be in contact with the side surfaces 5 of the ribs. The transition of the grooves to the bottom side 14 of the cutting insert either takes place along a sharp break line or along a small radius. The side surfaces 13 should be completely plane in order to attain a good contact with the side surfaces 5 of the ribs.

As mentioned above, the cutting inserts are directly pressed in their entirety, thus also the grooves 11. Thereby, the surface structure in the grooves will have a certain rugosity, which disappears if ground. The dimensions obtained after sintering and cooling are thereafter taken as set values for the production of the ribs of the holder. A certain grinding of these ribs is not so costly since one single holder may be used for a large amount of cutting inserts.

When fastening the cutting insert, this is placed over the ribs 4 in accordance with figures 1 to 5 and is fastened by the screw 8. At this occasion, it is an essential feature of the present invention that no contact arises between

the bottom side 14 of the cutting insert and the part surfaces 7 of the holder. As may be seen in figure 2, there is thus a gap s between said surfaces 7 and 14. This gap may lie within the size range >0 (e.g. 0,02 mm) and 0,2 mm. Further, it is an essential feature of the present invention that the tops of the ribs do not reach the bottoms of the grooves, which may also be seen in figure 2. By said two essential features, a squeezing wedge effect is made possible between the side surfaces 5 and 13 of the ribs and grooves, respectively, when the locking screw 8 is tightened. This wedge effect results in a fastening of the insert with a hitherto unattained stability and strength. Thus, for most applications abutment surfaces and abutment points become superfluous, as may be seen in figures 1 and 3. This simplifies the production of the insert pocket. Moreover, the slight surface rugosity of the directly pressed grooves positively influence the strength and endurance of the fixation.

Although it does not constitute a preferred embodiment of the present invention, the cutting insert may also be fastened with a suitable clamping arrangement instead of a screw. In this case, the pressure point of the clamp should be situated straightly above the middle groove.

After an operative cutting edge has been worn out, the insert may be loosened and turned 180° around the central axis of the screw 8, in order to indexate a new cutting edge.

As may be seen primarily in figure 1, the threaded hole 10 of the holder is situated on the middle rib. The reason for the hole being located on a rib instead of for instance on a part surface 7 between two ribs, is that the insert may snap if it is submitted to a force between two support lines. In order to confer to the insert a symmetrical fastening force on both sides of the middle groove, the insert and the holder, respectively, are shaped with an uneven number of grooves and ribs, respectively.

A cutting insert that has been formed in agreement with the present invention is well adapted to absorb both axial and radial forces. As an application example, this can be used by making double-functional inserts in accordance with figures

3, 6 and 7. By the straight front cutting edge 14 of this insert, and the curved side cutting edge 15 adjacent to both sides of the former, this insert may be used for transverse turning and also for axial copying, and as a form insert for radial turning. Thereby, a large number of different contours may be obtained.

Although not necessary, for certain applications with very large radial cutting forces, the ribs and grooves according to the invention may be combined with a rear support surface for the cutting insert, such as the surface 16 in figure 1.

EDITORIAL NOTE
24221/95

THIS SPECIFICATION
DOES NOT CONTAIN
A PAGE 7

THE CLAIMS DEFINING THE INVENTION ARE AS FOLLOWS:

1. An arrangement for fastening a cutting insert on an insert holder, the arrangement including, a bottom surface of the insert having substantially parallel grooves, and a holding surface of the insert holder having corresponding, substantially parallel ribs which are intended to fit into said grooves, characterised in that there is a gap(s) between the bottom surface of the cutting insert and the holding surface when the cutting insert is mounted in the holder, the grooves of the cutting insert are directly pressed and not ground, and the distance between two adjacent grooves measured perpendicularly to the grooves and the width of a groove measured level with the bottom surface of the cutting insert is between 1:1 and 4:1.

2. Arrangement according to claim 1, characterised in that the ribs have tops and the grooves have bottoms which do not contact.

3. Arrangement according to claim 1 or 2, characterised in that the ribs have a cross-sectional shape of a truncated, equilateral triangle.

4. Arrangement according to claim 1, further including a fastener for applying a downward force on the cutting insert to push the bottom surface grooves against the holding surface ribs.

5. Arrangement according to claim 4 wherein the

AUSTRALIAN PATENT OFFICE

holding surface includes a threaded hole formed therein; the cutting insert including a through-hole extending there through; the fastener including a screw extending through the through-hole and threaded into the threaded hole.

6. Arrangement according to claim 5 wherein there is an odd number of ribs, the threaded hole extending through a middle rib.

7. Arrangement according to claim 5 wherein the holding surface terminates at an edge and the cutting insert projects past the edge in a direction parallel to the ribs.

8. In combination, a holder, and a cutting insert seated atop the holder; the holder including an upwardly facing holding surface including upwardly projecting parallel first ribs; each first rib including a pair of first side surfaces converging upwardly toward a top of the respective first rib; adjacent ones of the first ribs spaced apart by upwardly open first grooves disposed in the holding surface, each first groove including sides diverging upwardly from a bottom of a respective first groove and defined by the first side surface of the adjacent first ribs;

the cutting insert including a downwardly facing bottom surface seated on the holding surface; the bottom surface including a plurality of downwardly open second grooves; each second groove including a pair of second side surfaces diverging downwardly from a top of a respective second groove; adjacent ones of the second grooves spaced apart by downwardly projecting second ribs disposed on the bottom surface; each second rib including sides converging

AUSTRALIAN PATENT OFFICE

downwardly toward a bottom of a respective second rib and defined by the second side surfaces of the respective adjacent second grooves;

the first ribs received in respective ones of the second grooves, and the second ribs received in respective ones of the first grooves; the second side surfaces supported on the first side surfaces; the tops of the first ribs spaced below the tops of the respective second grooves, and the bottoms of the second ribs spaced above the bottoms of respective first grooves, whereby contact between the bottom surface and the holding surface occurs only where the first surfaces of the first ribs engage the second side surfaces of the second grooves to produce a wedging effect therebetween.

9. The combination according to claim 8, further including a fastener for applying a downward force on the cutting insert to push the second side surfaces against the first side surfaces.

10. The combination according to claim 9 wherein the holding surface includes a threaded hole formed therein; the cutting insert including a through-hole extending therethrough; the fastener including a screw extending through the through-hole and threaded into the threaded hole.

11. The combination according to claim 10 wherein there is an odd number of first ribs, the threaded hole extending through a central one of the first ribs.

12. The combination according to claim 8 wherein there the first ribs define respective longitudinal axes;

AUSTRALIAN PATENT OFFICE

the holding surface terminating at an edge; the cutting insert projecting past the edge in a direction parallel to the axes.

13. The combination according to claim 12 wherein the holding surface includes threaded hole formed therein; the cutting insert including a through-hole extending therethrough; the combination further including a fastener screw extending through the through-hole and threaded into the threaded hole.

14. The combination according to claim 8 wherein each of the first and second ribs is shaped as a truncated triangle in cross section.

15. A cutting insert adapted to be fastened on a ribbed supporting surface, the insert comprising a top surface and a bottom surface, the top surface having cutting edges; the bottom surface including parallel grooves separated by parallel truncated ribs each groove; including side surfaces diverging toward the bottom surface; each rib including side surfaces converging downwardly toward the bottom surface and defined by the side surfaces of adjacent ones of the grooves; each groove having a maximum width at the bottom surface; adjacent grooves being spaced apart by a distance; a ratio of the distance to the maximum width being at least about 1:1 and no more than about 4:1.

16. The cutting insert according to claim 15 wherein a through hole extends completely therethrough from the top surface to the bottom surface and adapted to receive a fastening screw.

AUSTRALIAN PATENT OFFICE

17. A cutting insert substantially as herein described with reference to the accompanying drawings..

18. An arrangement substantially as herein described with reference to the accompanying drawings.

Dated this 10th day of September 1998

SANDVIK AB

By their Patent Attorneys

GRIFFITH HACK

Fellows Institute of Patent

Attorneys of Australia

AUSTRALIAN PATENT OFFICE

Fig. 2

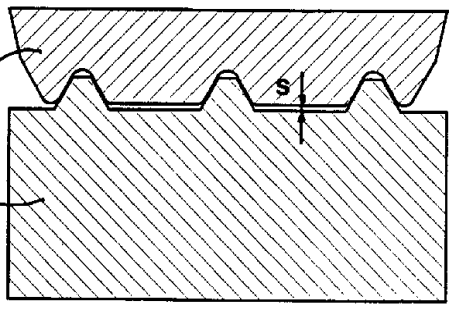


Fig.1

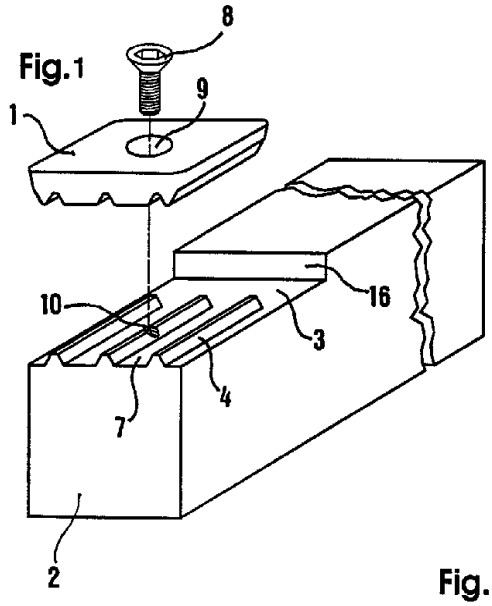


Fig. 3

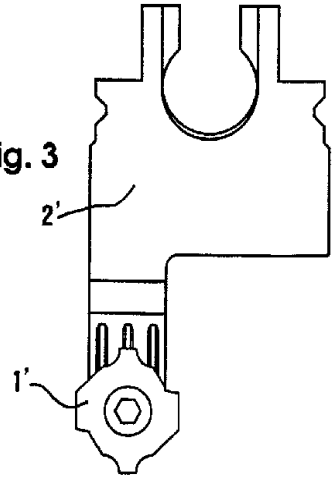

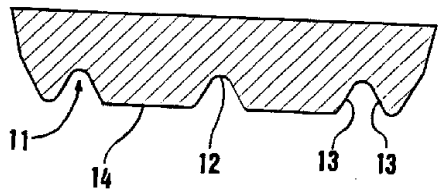


Fig. 4

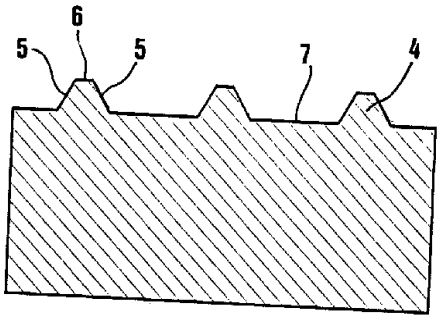


Fig. 5

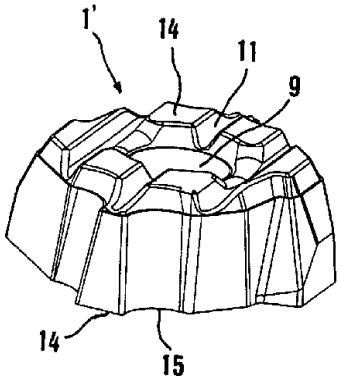


Fig. 6

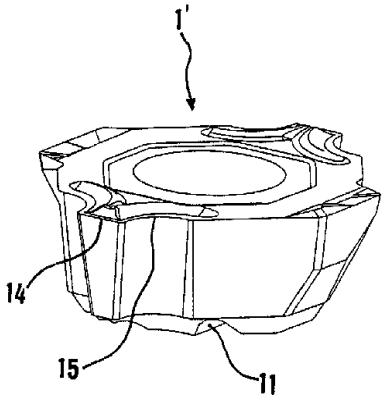


Fig. 7