March 16, 1954 A. THIES 2,672,577

SPARK PLUG

Filed Feb. 21, 1951

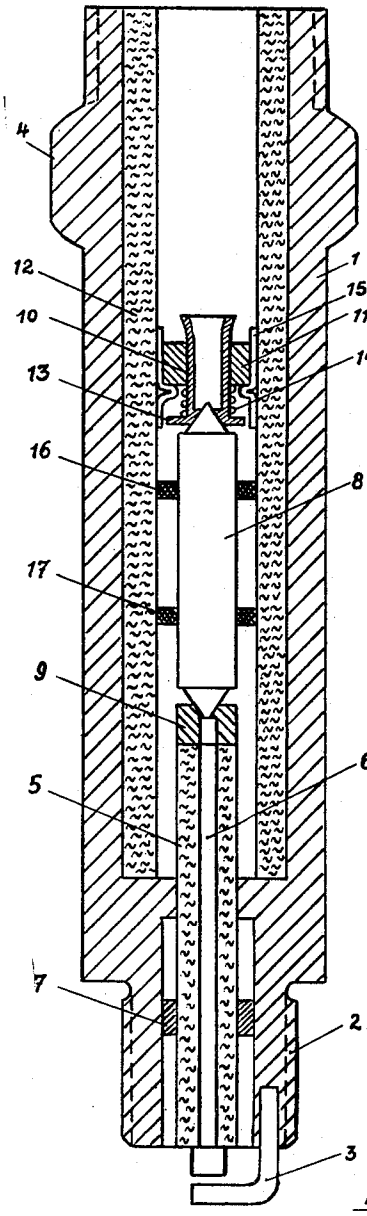

Fig. 1

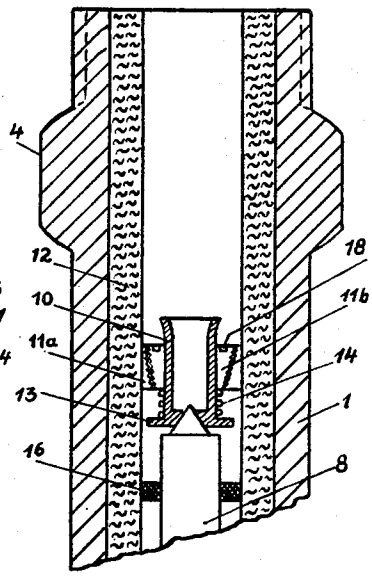

Fig. 2

Inventor

Adolf Thies

by

Burgess + Dinklage

Attorneys

Patented Mar. 16, 1954

2,672,577

UNITED STATES PATENT OFFICE

2,672,577

SPARK PLUG

Adolf Thies, Nienburg (Weser), Germany

Application February 21, 1951, Serial No. 212,003

9 Claims. (Cl. 315—58)

1

This invention relates to improvements in spark plugs. It relates particularly to improvements in spark plugs with interference eliminators.

Interference eliminators are used in connection with spark plugs to screen and attenuate the high frequency oscillations produced by the operation of the plug and thus prevent impairment of the reception of radio or television sets.

As is known, the interference caused by the spark plug is reduced and screened by the use of metal sleeves or by inserting resistors in the ignition line. It has also been suggested that resistors be built in the spark plugs themselves, so that they form a part of the center electrode.

Due to the high ignition voltage, for example, 15,000 volts, resistors of high resistance, must possess a certain minimum volume. Due to this volume it is impossible to install such resistors in spark plugs of known design.

In connection with the resistors which are installed in the spark plugs and form a fixed part of the center electrode, i. e., are rigidly connected with the other structural parts, they must withstand all impacts occurring during operation, such as those which spark plugs are normally subjected to as, for example, when used in motor vehicles. Inasmuch as the material of the resistors is always susceptible to impact, disturbances in the ignition and even breakdowns of the resistors are unavoidable if they are rigidly installed as in the known designs. Similarly, the installation of the resistors in these conventional spark plugs causes considerable difficulties inasmuch as a dependable arcless contact between the ends of the resistor and the center electrode or the ignition cable must be assured.

One object of this invention is a spark plug with an interference eliminator which is not subject to the aforementioned difficulties. This and further objects will become apparent from the following description read in conjunction with the drawing in which:

Fig. 1 is a partial sectional view of a spark plug with an interference eliminator according to the invention; and

Fig. 2 is a partial section of part of a spark plug according to the present invention with a special design of the contact member support.

It has now been found that for an effective attenuation of high frequency disturbing oscillations, resistors or resistance bodies having a resistance of at least 10,000 ohms are required. This high resistance will attenuate oscillations of a very high frequency, as for example, in the

2

field of meter and decimeter waves, which heretofore known expedients would not effectively eliminate. The spark plug according to the invention has an interference eliminator which avoids the disadvantages of the known interference eliminators, and will not interfere with the reception of radio or television sets, even those located in the immediate vicinity, and has further considerable advantages both in operation and manufacture.

The spark plug, according to the invention, is provided with a resistance member which in contrast to the known interference eliminators, does not form a fixed part of the center electrode, and is not rigidly attached thereto, but is elastically arranged between the inner end of the center electrode (which is surrounded by an insulating jacket), and a contact member for connecting the ignition cable thereto.

By mounting the resistance member in the elastic support, it is no longer subjected to impact stresses during operation or subjected to any type of mechanical strain. In addition to this, expansion of all inner structural members of the spark plug lying between the spark gap and the cable connection is allowed, so that all stresses of the material which occur due to the unusually large temperature variations encountered in the operation of the spark plug are considerably reduced. In addition to this, a complete arcless contact from the center electrode to the ignition cable is achieved.

In accordance with a preferred embodiment of the invention the contact member is developed as a bushing for the end of the ignition cable, which of course will also allow the insertion of an ignition cable end provided with a suitable plug.

The contact member is held according to the invention by a ring which is fastened to the inner wall of an insulating member preferably developed in the form of a hollow cylinder and introduced into the metallic spark plug shell.

In order to obtain an elastic support of the resistance member, the contact member is slidably supported in the ring and a spring is arranged between the ring and a thrust surface formed on the contact member. If the thrust surface of the contact member is on the side of the ring facing the resistance member, a compression spring is used. If the thrust surface is on the opposite side, then a tension spring fastened at its ends to the ring and contact member is used. Inasmuch as the ring is positioned at a distance from the parts of the spark plug which become excessively hot during operation and is not subjected to substan-

tial thermal stresses, insulating plastics such as vulkanfiber may be readily used as the construction material for the ring.

It is preferable, however, to construct the ring of metal or to provide it with a conductive coating for if the ring is made in this manner a condenser consisting of the ring, insulating material, and the metallic spark plug shell is formed, and the metallic spark plug shell and the ring acting as the plates and the insulating member acting as the dielectric. The condenser action of these three elements will considerably increase the capacitance between the ignition cable and the ground. As is already known, the loss of ignition power caused by inserting a resistance in the ignition line can be eliminated by increasing the capacitance between the center electrode and the ground which is done in conventional practice by inserting condensers in parallel.

The capacitance may be still further increased a substantial amount by inserting a metallic sleeve, wider than the ring between the ring and the inner wall of the insulating member.

It is also possible to provide the inner wall of the insulating member with a conductive coating as, for example, metallizing it, which is in electric contact with the ring.

If the ring is produced of a flexible metal as, for example, copper, the fastening within the insulating member may be advantageously effected by subjecting the metal to pressure upon both sides.

In accordance with the present invention construction is possible which will allow the removal and replacement of the contact member and in particular the resistance member at any time. According to this construction the ring may be formed in two parts and consist of a slit nut provided with an internal cone and a conical screw threaded to fit into the internal cone of the slit nut and provided with a bore for the contact member. Upon screwing in the screw, which is preferably provided with a recess or projection for engagement by a tool, the nut is spread and a firm seat within the insulating member is obtained. The screw may be unscrewed in an extremely simple manner and the individual parts, such as, for example, the resistance member, can be replaced.

The resistance member is advantageously displaceably supported by means of insulating rings on the inner wall of the insulating member, so that a concentric support of the resistance member within the insulating member is assured.

In accordance with a further preferred embodiment of the invention the metallic spark plug shell, and advisedly the insulating member, extend beyond the place of support of the contact member, so that the spark plug shell itself serves as a screen for the high frequency oscillations and removes any necessity for arranging special screening sleeves on the spark plug body. In this manner there is furthermore obtained sufficient room to hold the resistance members having a high resistance, for example, 10,000 ohms and more within the insulating member. In this construction it is possible to install commercial resistance members without making any change whatsoever.

The resistance members may be constructed of the materials conventionally known and used for resistances and need only be formed in a shape to fit within the plug.

Referring to the drawings the cylindrical metal spark plug shell 1 is, as customary, provided with the thread 2 for screwing into the motor housing or cylinder head, the ground electrode 3 and the hexagon 4. The center electrode 6 surrounded by insulating jacket 5 is hermetically fastened to the inner wall of spark plug shell 1 by means of the forced in metal ring 7.

In accordance with the invention, the resistance element 8 is elastically supported between the contact member 10 and the center electrode 6, provided with nut 9. The contact member 10 is developed as a bushing for the introduction of the ignition cable end or a plug arranged on the ignition cable end.

Ring 11 which is attached to the inner shell of the hollow cylindrical insulating member serves to support contact member 10.

In order to obtain the elastic support of resistance member 8, contact member 10 is displaceably supported in ring 11 and a compression spring 14 is provided between ring 11 and thrust surface 13 provided on contact member 10.

Ring 11 preferably consists of metal, for example copper, and is force-fitted within insulating member 12. In this manner, ring 11, together with spark plug shell 1 and insulating member 12 as dielectric, forms a condenser by which the capacitance between the ignition cable and the ground is considerably increased. A further increase of the capacitance is obtained by the fact that the metal sleeve 15 which is wider than ring 11, is arranged between ring 11 and insulating member 12. To obtain the same effect, the inner wall of the insulating body 12 may also be partially provided, for example metallized, with a conductive coating which is in electric contact with ring 11.

Resistance member 8 is displaceably supported by means of insulating rings 16 and 17, so that a concentric support within insulating member 12 is assured.

For complete high frequency screening, spark plug shell 1 and insulating member 12 are extended to such an extent beyond the place of support of contact member 10 that special screening sleeves are not required.

In Fig. 2, there is shown an embodiment of the support of contact member 10 by means of which a particularly easy replacement of the inner parts of the spark plug, especially the resistance member 8, is made possible.

Ring 11 is developed in two parts and consists of the slit nut 11*a* provided with an inner cone and the conical screw 11*b* provided with a bore for contact member 10. When assembling, screw 11*b* with the contact member 10 displaceably arranged in its support and the compression spring 14 are first of all screwed loosely into the slit nut 11*a* outside of the spark plug. Thereupon, all parts are introduced together into the insulating member 12 until contact member 10 exerts spring pressure against resistance member 8. Finally, screw 11*b* is tightened so that the slit nut 11*a* is spread and assures a firm hold. In the reverse sequence of the steps indicated, the bipartite ring 11 can be easily removed from insulating member 12 and resistance member 8 can easily be replaced.

In order to facilitate the tightening or loosening of screw 11*b* by means of a tool inserted in the insulating body, recesses 13 are provided on screw 11*b*.

I claim:

1. In a spark plug having a hollow metallic spark plug shell with an insulated central bore and an insulated central electrode axially positioned in the center of the bore, the improvement

which comprises a ring in holding contact with the surface of said insulated bore positioned above the top of said central electrode, a contact member for the connection of ignition cable thereto axially displaceably supported in said ring, a resistance element positioned between and in direct electrical contact with the top of said central electrode and said contact element, and spring means positioned for electrically urging said contact member toward said central electrode and thereby in direct electrical contact with said resistance element.

2. Improvement according to claim 1, in which at least the surface portion of said ring is formed with an electrically conductive material.

3. Improvement according to claim 1, in which said contact member is developed as a sleeve for receiving the end of an ignition cable.

4. Improvement according to claim 3, in which a metal sleeve is positioned between said ring and the surface of said insulated bore, said metal sleeve being wider than said ring.

5. Improvement according to claim 1, in which said ring is a bipartite ring comprising a nut portion provided with an inner cone and conical screw portion provided with a bore for the said contact member.

6. Improvement according to claim 5, in which said screw portion is provided with engagement means for a screw tool.

7. Improvement according to claim 1, in which said resistance element is elastically supported by at least one insulating ring.

8. Improvement according to claim 1, in which the metallic spark plug shell extends sufficiently past said contact member to provide high frequency screening.

9. Improvement according to claim 1, in which said resistance is centrally positioned in the spark plug shell in spaced relation to the inner walls thereof, whereby said resistance is protected from thermal exposure.

ADOLF THIES.

References Cited in the file of this patent

UNITED STATES PATENTS

Number	Name	Date
1,960,317	Rabezzana	May 29, 1934
2,029,570	Kasarjian	Feb. 4, 1936
2,071,571	Rabezzana	Feb. 23, 1937
2,081,500	Nowosielski	May 25, 1937
2,129,961	Rabezzana	Sept. 13, 1938
2,173,766	Ramsay	Sept. 19, 1939