Oct. 21, 1941. C. ARELT 2,259,445

PACKAGE STAMPER

Filed April 30, 1940 3 Sheets-Sheet 1

FIG. 1

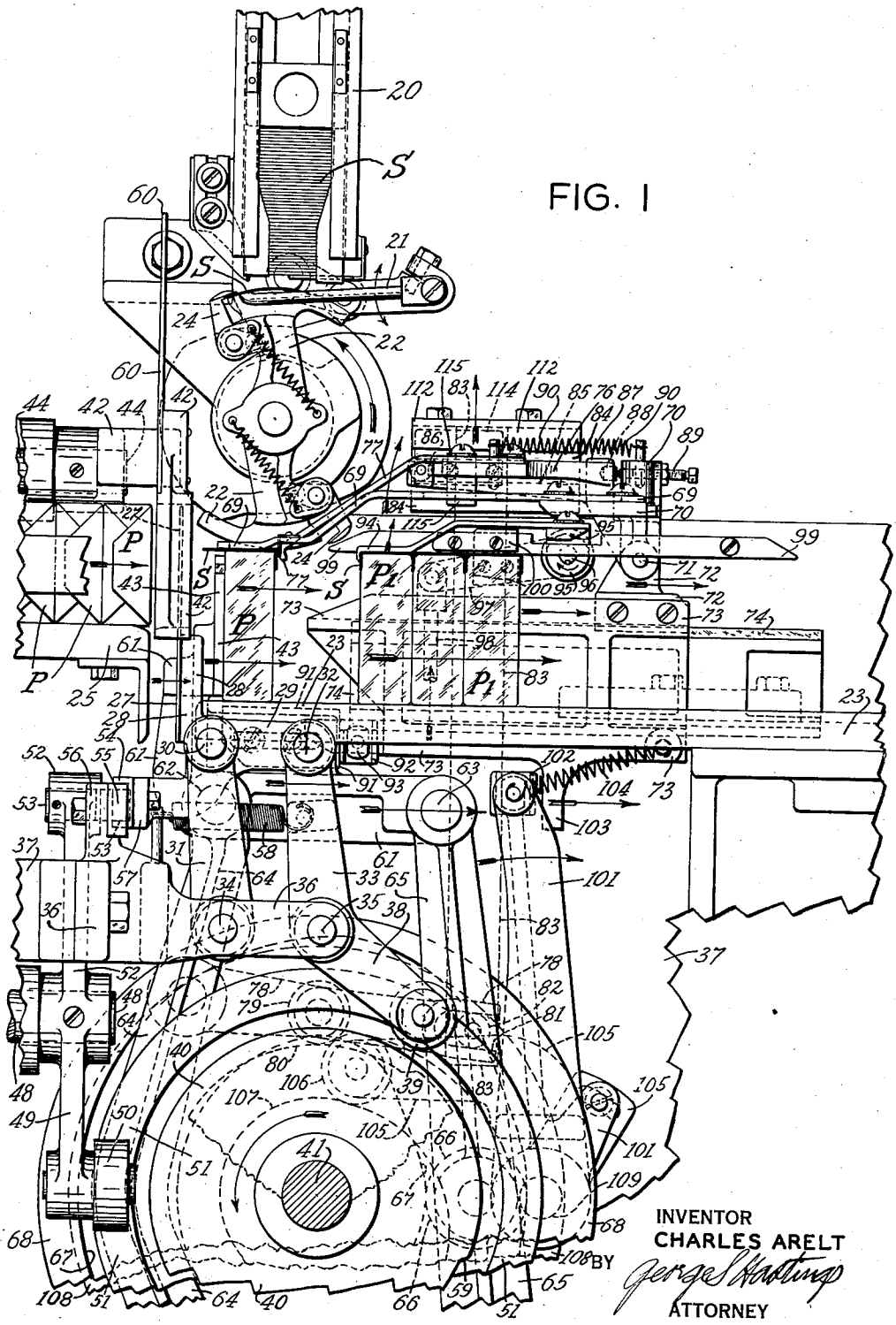

INVENTOR
CHARLES ARELT
BY George S. Hastings
ATTORNEY

Oct. 21, 1941. C. ARELT 2,259,445

PACKAGE STAMPER

Filed April 30, 1940 3 Sheets-Sheet 2

FIG. 2

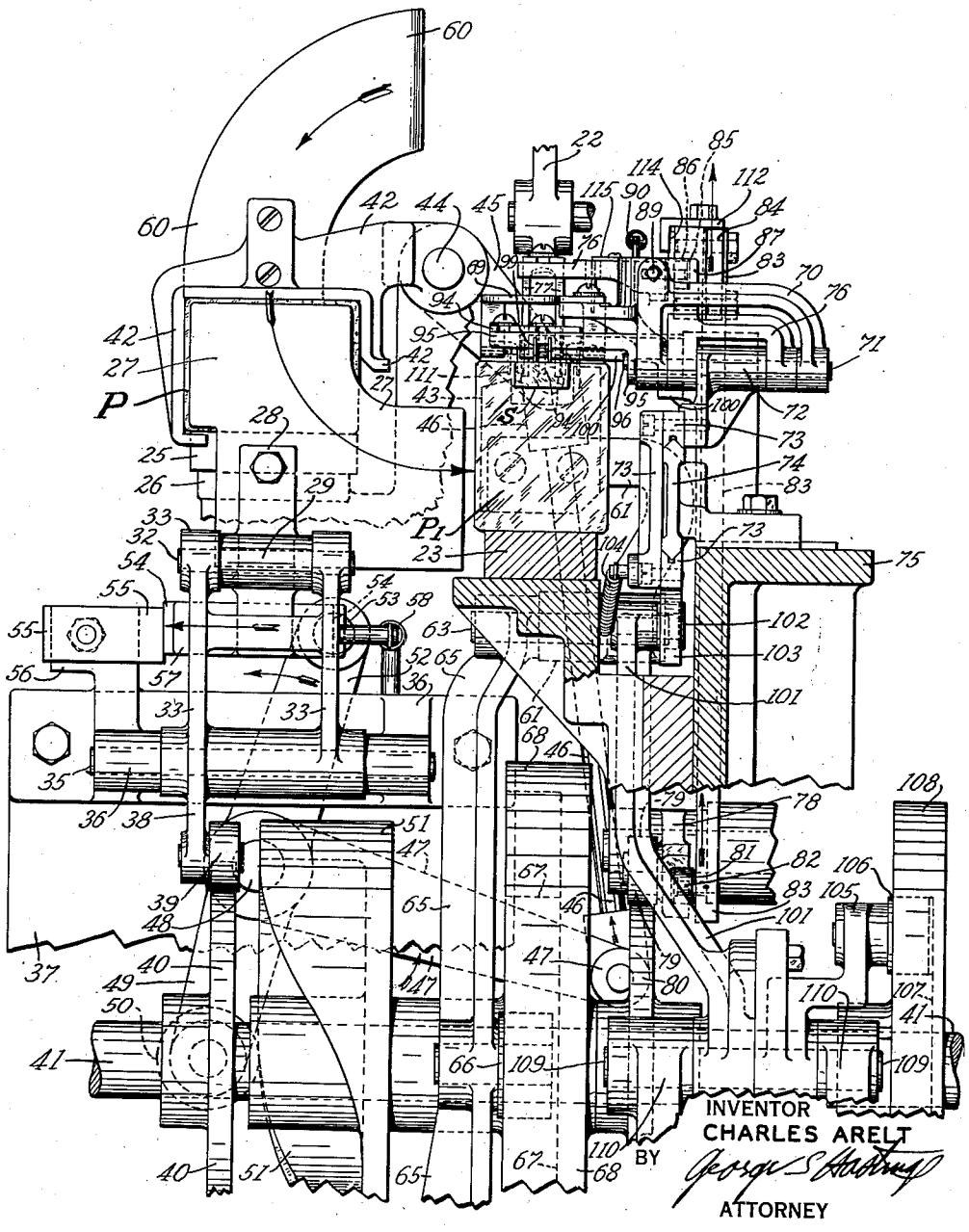

Oct. 21, 1941. C. ARELT 2,259,445

PACKAGE STAMPER

Filed April 30, 1940 3 Sheets-Sheet 3

FIG. 3

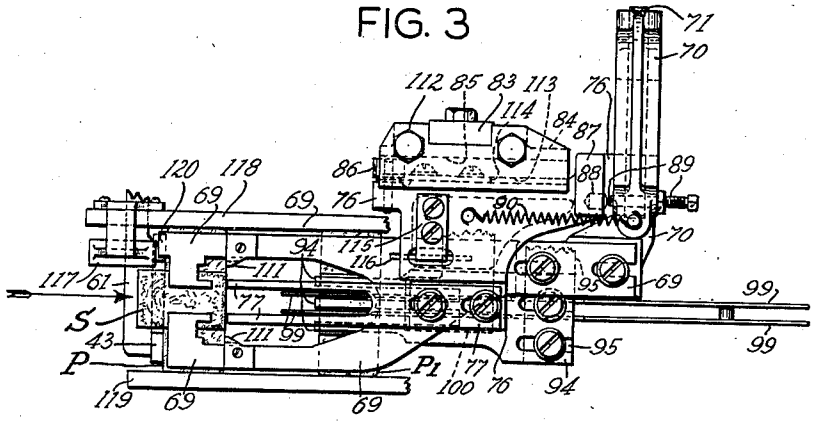

FIG. 4

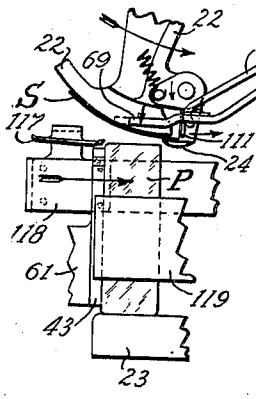

FIG. 5

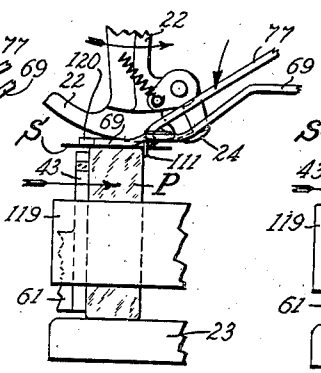

FIG. 6

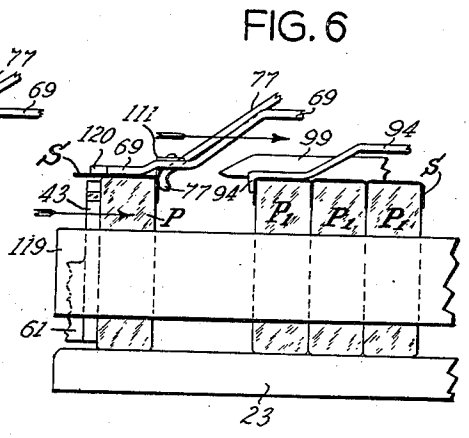

FIG. 7

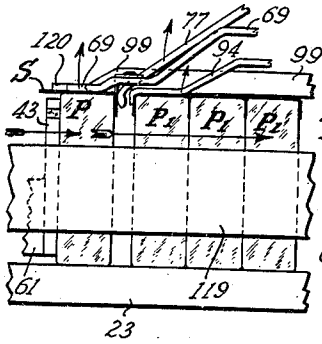

FIG. 8

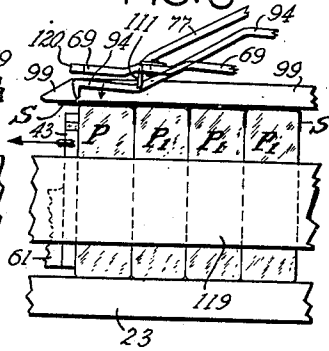

FIG. 9

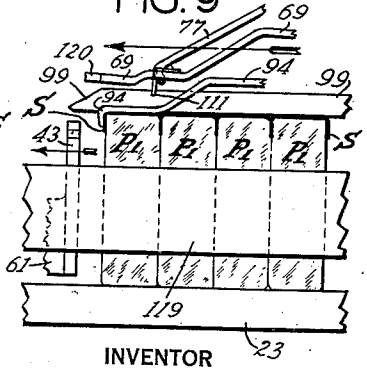

INVENTOR
CHARLES ARELT
BY George S. Hastings
ATTORNEY

Patented Oct. 21, 1941 2,259,445

UNITED STATES PATENT OFFICE

2,259,445

PACKAGE STAMPER

Charles Arelt, Richmond Hill, N. Y., assignor to American Machine & Foundry Company, a corporation of New Jersey

Application April 30, 1940, Serial No. 332,485

18 Claims. (Cl. 216—53)

This invention relates to package stampers for attaching revenue stamps or labels to packages, and an object of the invention is to provide an improved stamper for applying the stamps to continuously traveling packages. To this end, the applier and folder plates operating on the top and forward side of the advancing packages are moved along with the packages while in contact therewith, whereby they may operate on the packages at high speed without injuring the same.

Another object is to prevent gaping of the outer pouch wrapper of cigarette packages while the ends are being wiped down thereover. For this purpose the applier plate, which presses down upon the stamp applied to the top of the package, may be provided with prongs projecting downwardly at either side of the revenue stamp and pressing against the upper edge of the pouch wrapper while the stamp is being wiped down thereover.

Further objects are to relieve the pressure of the yielding feeler plate upon the package in the transfer while it is being transported to the channel wherein the packages are advanced under the applier and folder plates, to prevent smudging of the printing on the package, and to interrupt the movement of the transfer and remove the strain from the feeler mechanism when no package enters the transfer.

Still another object is to hold down the folds on the top of the package transported to said channel until it reaches stamp-applying position. With these and other objects not specifically mentioned in view, the invention consists in certain constructions and combinations hereinafter briefly described and set forth in the appended claims.

In the accompanying drawings which form a part of this specification and in which like characters of reference indicate the same or like parts:

Fig. 1 is a side elevation of the improved and novel package stamper;

Fig. 2 is an end elevation of the same;

Fig. 3 is a plan view of the stamp applier and folding mechanism; and

Figs. 4 to 9 illustrate the successive steps of applying and folding the stamp over the top of a cigarette package.

Referring to Fig. 1, the stamps or labels S are stacked in a magazine 20 from which they are successively withdrawn by a suction take-off arm 21 which deposits each stamp upon the circumference of a stamp transfer wheel 22, the latter successively bringing the stamp into position to engage successive cigarette packages P advanced over a runway 23. The stamp S, which is held on the transfer wheel 22 by a clamp 24 while being carried to the package P, receives a coat of paste from the spaced flanges of a rotating paste wheel (not shown) by being drawn thereover. The constructions of the stamp magazine 20, the take-off arm, the paste wheel and the transfer wheel 22, as well as the driving and operating mechanism of the latter may be the same as those disclosed in Patent 1,998,067 issued April 16, 1935, to C. Arelt, et al.

The packages P issuing from the cigarette packaging machine travel over a runway 25 held by a suitable bracket 26 attached to the main frame of the machine. Arriving at the end of said runway 25 the leading package encounters a feeler plate 27 attached to a projecting member 28 of a link 29. One end of arm 29 is loosely mounted on a stud 30 held by a forked lever 31, while the other end of arm 29 is pivoted to a stud 32 held by a forked lever 33. The forked levers 31 and 33 are parallel to each other and loosely mounted on shafts 34 and 35 respectively, both of which are supported by a bracket 36 attached to the main frame 37 of the machine (Figs. 1 and 2). Arm 33 furthermore is equipped with an extension 38 on the free end of which is mounted a roller 39 resting on a control cam 40 mounted on the stamper operating shaft 41 which is continuously driven from the main drive of the packaging machine (not shown).

The packages P advanced over runway 25 in a horizontal position are successively transferred from said runway 25 on to runway 23 by a transfer arm 42 and a reciprocating pusher plate 43 (Figs. 1 and 2). While the packages P, when entering the transfer arm 42, are in a horizontal position, said packages are delivered to runway 23 in an upright position, so that the stamp can be applied conveniently over the top of said packages. The transfer arm 42 is mounted on an oscillating shaft 44 actuated by a lever 45 (Fig. 2) which is connected through a link 46 to a lever 47 mounted on a shaft 48. The latter, as well as shaft 44, are supported by suitable bearings of main frame 37. Shaft 48 is operated by a cam lever 49 carrying a cam roller 50 engaging with a cam 51 mounted on shaft 41. Cam lever 49 furthermore is equipped with a control arm 52 carrying a control stud 53 the projecting end of which, when at the proper time no package has entered the transfer arm 42, presses against a lock bar 54 which in turn contacts a stationary

stop bar 55 rigidly mounted on a lug 56 of bracket 36. Lock bar 54 is secured to a lug 57 which projects from the connecting link which carries the feeler plate 27. Therefore, when at the proper moment no package arrives to enter the transfer arm 42, the feeler plate 27 remains within the same and lock bar 54 stays in the path of the control stud 53 of the oscillating control arm 52 and, since cam lever 49 is part of arm 52, roller 50 cannot follow its cam 51. Thus the movement of shaft 48, which normally actuates the transfer arm 42 is stopped. Since only a few thousandths of an inch clearance is provided between lock bar 54 and stop bar 55, the pressure of control stud 53 will wedge lock bar 54 against stop bar 55, thereby perfectly locking the entire transfer mechanism with the decided advantage of taking any possible strain off the feeler mechanism. At the proper portion of the cycle, control stud 53 releases lock bar 54 again and, due to a light tension spring 58, feeler plate 27 floats within the pocket of the transfer arm 42 until a package enters said pocket of said transfer arm and pushes feeler plate 27 out of the same. Said feeler plate 27 also acts as a stop plate for said package to determine the right position of the latter within the pocket. The movement of feeler plate 27 is checked when roller 39 of lever 38 contacts the cam 40. It is experienced that, while the leading package is pushed into the pocket of the transfer arm by the following packages, quite a bit of pressure builds up as the leading package is stopped at the end position of the feeler plate 27. Therefore, in order to prevent smudging of the printed sides of the packages during transfer, this pressure is released by providing a step 59 in cam 40 (Fig. 1) allowing said feeler plate 27 to slide back a bit further after the package is located in the pocket of the transfer arm 42, thus reducing friction between the package to be transferred and the remaining package on one side and the feeler plate 27 on the other, during transferring action. When a package is in the pocket of the transfer arm and the feeler plate 27 in its rear position, the lock bar 54 is out of the path of the control stud 53 on the oscillating control lever 52, thus permitting cam lever 49 to actuate shaft 48 and therewith the transfer arm 42. To the latter is furthermore attached a shield 60 employed for the purpose of preventing any packages from falling off the runway 25 while said transfer arm delivers a package to the runway 23.

As mentioned heretofore, the pusher plate 43 pushes the package P out of the pocket of the transfer arm 42 over the runway 23 where the stamp is applied to the top of the package. The transfer arm 42 then returns immediately to its receiving position.

The pusher plate 43 is attached to a reciprocating pusher arm 61 pivoted by a pair of studs 62 and 63 to an idler or supporting lever 64 and an operating or cam lever 65. Both of said levers are pivoted to suitable bearing brackets (not shown) of the main frame of the machine. Cam lever 65 carries a cam roller 66 engaging with a cam track 67 of a cam 68 mounted on the shaft 41.

As the package P propelled by pusher plate 43 passes underneath the stamp transfer wheel 22, the stamp S to which stripes of glue or paste have been applied, is released by clamp 24 on said transfer wheel and a forked stamp applier plate 69 descends and presses the stamp upon the top of the package (Figs. 4 and 5). The stamp applier plate 69 is adjustably mounted on a bracket 70 pivoted on a stud 71 held by a bracket 72 (Figs. 1 and 2) rigidly attached to a sliding frame 73 slidably supported and guided by a stationary guide plate 74 adjustably mounted upon a suitable bracket 75 (Fig. 2) of main frame 37. To stud 71 is furthermore pivoted a bracket 76 on which is adjustably mounted a forked stamp folder plate 77 which descends immediately after the stamp applier plate 69 has pressed the stamp S upon the top of the package (Fig. 6). The descending and ascending movement of the stamp applier plate 69, as well as the stamp folder plate, is achieved by a cam lever 78 (Figs. 1 and 2) carrying a cam roller 79 engaging with a cam 80 mounted on shaft 41. The end portion of said cam lever 78 is equipped with a track 81 which engages with a roller 82 pivoted to a vertical slide-bar 83 on whose upper end is mounted a guide head 84. The latter is provided with a horizontal track 85 (Figs. 1, 2 and 3) which engages with a roller 86 pivoted to the bracket 76. The latter is equipped with a lug 87 carrying a stop stud 88 (Figs. 1 and 3) which contacts a control screw 89 held by the bracket 70. The latter is furthermore connected to bracket 76 by a tension spring 90. This unique hook-up of bracket 70 with bracket 76, which carries the stamp applier plate 69 and the folder plate 77 respectively, enables the folder plate 77 to continue its downward movement and fold the projecting front end of the stamp smoothly over the side of the package while the stamp applier plate holds the stamp on the top of the package (Fig. 6). Of course the continuing downward movement of the folder plate 77 while the applier plate stays on top of the package, creates a gap between stop stud 88 and control screw 89 and the relative setting of plates 69 and 77 can be adjusted and varied by turning screw 89. Another decided advantage of this construction lies in the fact that the fulcrum point of the stamp applier plate 69 as well as the folder plate, which is the axis of stud 71, is in line with the top of the package, thereby avoiding any appreciable arc during the upward and downward movements of said plates 69 and 77.

In order to assure perfect registration and also assure a perfect control of speed of both the applier and folder plates in relation to the speed of the package traveling over runway 23, the pusher arm 61 carries an adjustably mounted plate 91 (Fig. 1), which during its forward movement contacts a block 92, which is pivoted in self-aligning relation on a stud 93 held by the lower flange of the sliding frame 73 upon which the applier and folder plates 69 and 77 respectively are mounted by bracket 72. Therefore, the forward speed of the package is exactly the same as that of the applier and folder, thus keeping the registration of the latter in constant proper relation to each other while the stamp is applied during the forward movement of the package propelled by pusher plate 43 and a much higher speed can be obtained than ever possible heretofore.

The applier plate 69 as well as the folder plate 77 remain in contact with the applied stamp during almost the entire forward stroke of plate 43 until the package almost reaches the already stamped row of packages P1, the last one of which is still held by a set of stamp folder prongs 94 adjustably mounted on an oscillating flanged bracket 95 fastened to a shaft 96 carrying a lever 97 (Fig. 1) which is actuated by a connecting rod

98 from a properly timed cam lever (not shown) of the main drive of the machine. When the package P almost reaches the row of the already stamped packages P1, the applier plate 69 and the folder plate 77 move upward and at the same time the folder prongs 94 release the rearmost of the already stamped row of packages P1 and also swing up (Fig. 7). The pusher plate 43 keeps pushing the package P against said rearmost package P1 and continues pushing, now of course the entire row, until the rear top edge of the package P is aligned with the folder prongs 94 (Fig. 8) which then descend and fold the remaining projecting end of the stamp S over on to the rear side of package P (Fig. 9) while pusher plate 43 returns to its starting position. The fact that the freshly applied stamp is held on top of the package by the applier plate 69 until it reaches a top guide rail 99 and that the front end of the stamp is held to the front side of the package P by the fingers of folder plate 77 until it almost comes in contact with the rearmost package of the already stamped packages P1, prevents the stamp from becoming loose or shifting during any part of the operation or movements of the package. The rear end of the stamp is held to the rear side of the package by prongs 94 until a new package is pushed against the same. The top rail 99 is mounted on a bracket 100 rigidly attached to the main frame of the machine. While the pusher plate 43, after delivering its freshly stamped package to its destination, returns immediately to its starting position, applier plate 69 and folder plate 77 return in raised position and independently of pusher plate 43.

The return stroke of the applier and folder mechanism is derived and controlled from a control arm 101, to the upper end of which is pivoted a self-aligning block 102 against which is held the lug 103 of slide 73 by the action of a tension spring 104 while pusher arm 61 starts its return stroke, wherefore pusher plate 91 pulls away from block 92. The slide 73 then follows the control lever 101 which is adjustably connected to and operated by a cam lever 105 carrying a roller 106 engaging with a track 107 of a cam 108 mounted on the shaft 41. Control lever 101 and cam lever 105 are mounted on a shaft 109 supported by a suitable bearing bracket 110 (Fig. 2) attached to the main frame of the machine. The slide 73 does not return quite as far as the pusher arm 61 and there is a space between the pusher plate 91 of arm 61 and the block 92 of slide 73 when the latter and arm 61 are in their rearmost position. This space is provided for the purpose of allowing the applier plate to contact the freshly applied stamp S on the forwardly moving package P a moment before the slide carrying said applier plate, is taken along by the pusher arm. Thus said applier plate will slide for a moment on the applied stamp of the moving package and iron the same thereby obtaining a better seal of the stamp on the top of the package. Since the applier plate 69 is also equipped with a pair of prongs 111 extending downwardly at either side of the revenue stamp, the package will slide against these prongs which serve to press the upper edge of the pouch wrapped at the top front side of the package firmly against the inner foil wrapper (Fig. 5), thereby preventing the outer wrapper from bulging out of place while the stamp is folded thereover a moment later by the fingers of folder plate 77. The extent of the gap between the plate 91 and block 92 is such that at the moment the front side of the moving package touches prongs 111, the slide 72 and therewith the applier and folder mechanism are taktaken along by the pusher arm 61.

In order to prevent any side sway and assure a rigid mounting and connection of the delicate applier and folder mechanism with the slide 73, the guide head 84 is equipped with an angular guide shoe 112 which, together with head 84 forms a guide channel 113 (Figs. 2 and 3) into which projects a guide plate rigidly attached to bracket 76. The latter, furthermore carries a guide plate 115, the protruding end of which projects into a slot 116 of the applier plate 69.

In order to prevent the top folds of the package P from opening or being disarranged before the stamp is applied, said top folds are held down by a guide shoe 117 (Figs. 3 and 4) from the moment the package is delivered on to the runway 23 until it reaches the stamp applying position. Said guide shoe is attached to a rear side guide rail 118 (Figs. 3 and 4) which in conjunction with a front side guide rail 119 (Figs. 3 to 9 inc.) guides the package over the runway 23. The extreme end of the applier plate 69 is also equipped with a projecting nose 120. The latter is provided for the purpose of contacting the top edge of the pusher plate 43 in case no package is supplied, thus preventing the applier plate 69 from dropping too low or causing damage to package P1.

It will be understood that when no package is advanced against the feeler 27 in position to be transported by the transfer arm 42 to the runway 23 the rotation of the shaft on which transfer wheel 22 and the cam controlling the swinging movement of the suction take-off arm 21 are mounted, will be interrupted by throwing out a clutch (not shown) on said shaft which is controlled by a linkage (not shown) connected to the free end of the cam lever 42. The construction of said clutch and linkage may be the same as that disclosed in above mentioned Patent 1,998,067, to which reference may be had for a complete disclosure thereof.

It may be noted that with the construction of the folder for wiping the stamp end down over the forward side of the package, as shown in the above mentioned patent, the rapid descent of the folder required to prevent interference with the advancing package may cause the stamp to slide under the applier plate, since the adhesion of the stamp to the top of the package and the pressure of the applier plate is insufficient to prevent displacement of the stamp. With the present construction, there is no possibility of this occurrence. Moreover the folder occasionally wiped the stamp into the space between the upper edge of the outer pouch wrapper and the inner foil wrapper, thereby creating a furrow in the stamp at this point, which is avoided with the present construction.

In practice, the stamp end after withdrawal of said folder of the above mentioned patent may not adhere to the side of the package and may spring up and be wrinkled when pressed against the rear face of the preceding package. With the present construction the stamp end is held down by the folder until it is close enough to the preceding package so that when released it will not be able to spring away from the side of its package sufficiently to create wrinkles. The tip of the folder may be held between these two packages while they are pressed together to assure the affixing of the stamp to the forward

upper edge of the package, and the stamp on the preceding package will be simultaneously pressed against its rear upper edge, the folder moving along with the package engaged by the pusher during this operation if desired. In the case of stamps having a shorter forward or trailing end this operation will be of considerable advantage in that substantially the entire extent of the shorter end will be pressed against the upper edge of the package.

What is claimed is:

1. In a package stamper, the combination with means for advancing packages having outer pouch wrappers which are open at the tops of the packages, of a device for applying a stamp to the top of a package advanced by said means with an end projecting therefrom at one side of said package, a member for pressing the upper edge of the pouch wrapper against the side of the package at which said stamp end projects to prevent gaping thereof, and mechanism for wiping said projecting stamp end over said upper edge subsequent to the engagement of said member with said upper edge and while it is pressed by said member.

2. In a package stamper, the combination with a device for applying a stamp to the face of a package having wrapper folds overlapped thereon, of a member for pressing down the folds on said face prior to the application of a stamp thereto and until the package reaches stamp-applying position, and means arranged to receive a package and move it into contact with said member and then into stamp-applying position, said member being arranged to remain in engagement with the folds of said package from the moment it initially engages said folds until the package reaches stamp-applying position.

3. In a package stamper, the combination with means for continuously advancing packages, of a device for applying a stamp to one face of a package advanced by said means with an end thereof projecting therefrom, a sliding member movable along the path of packages advanced by said means, a presser mounted on said member and movable into position to engage the stamp applied to the advancing package, a stationary support on which said member is slidably mounted, and mechanism for moving said member on said support along with and at the same speed as said package whereby said presser will be moved at the same speed as the package while pressing the stamp against the face thereof to which it has been applied.

4. In a package stamper, the combination with means for continuously advancing packages, of a device for applying a stamp to one face of a package advanced by said means with an end thereof projecting therefrom, a sliding member movable along the path of packages advanced by said means, a presser mounted on said member and movable into position to engage the stamp applied to the advancing package, said presser being pivoted on a portion of said sliding member aligned with the stamped face of the package and a stationary support on which said member is slidably supported.

5. In a package stamper, the combination with means for continuously advancing packages, of a device for applying a stamp to one face of a package advanced by said means with an end thereof projecting therefrom, a sliding member movable along the path of packages advanced by said means, a presser mounted on said member and movable into position to engage the stamp applied to the advancing package, said sliding member being arranged to be engaged by said package advancing means and moved therewith during the engagement of said presser with said stamped face and a stationary support on which said member is slidably supported.

6. In a package stamper, the combination with means for continuously advancing packages, of a device for applying a stamp to one face of a package advanced by said means, with one end thereof projecting therefrom, a sliding member movable along the path of packages advanced by said means, a folder mounted on said member and movable into position to engage and wipe said projecting stamp end upon said package, a stationary support on which said member is slidably mounted, and mechanism for moving said member on said support along with and at the same speed as said package whereby said folder will be moved at the same speed as the package while wiping the projecting stamp end upon said package.

7. In a package stamper, the combination with means for continuously advancing packages, of a device for applying a stamp to one face of a package advanced by said means, with one end thereof projecting therefrom, a sliding member movable along the path of packages advanced by said means, a folder mounted on said member and movable into position to engage and wipe said projecting stamp end upon said package, and a stationary support on which said member is slidably mounted, said sliding member being arranged to be engaged by said package advancing means and moved therewith during the engagement of said folder with said stamp whereby said folder will be moved along with and at the same speed as said package while wiping the stamp end upon the package.

8. In a package stamper, the combination with means for continuously advancing packages, of a device for applying a stamp to one face of a package advanced by said means, with one end thereof projecting therefrom, a sliding member movable along the path of packages advanced by said means, a folder mounted on said member and movable into position to engage and press the stamp upon said package, a stationary support on which said member is slidably supported and mechanism for moving said member along with said package advancing means shortly after said presser engages said stamp whereby said folder will be moved along with and at the same speed as said package while wiping the stamp end upon the package.

9. In a package stamper, the combination with means for continuously advancing packages, of a device for applying a stamp to one face of a package advanced by said means, with one end thereof projecting therefrom, a sliding member movable along the path of packages advanced by said means, a folder mounted on said member and movable into position to engage and press the stamp applied upon said package, and mechanism for moving said member along with said package advancing means shortly after said presser engages said stamp whereby said presser will be moved along with and at the same speed as said package while pressing the stamp upon the face of the package to which it has been applied, a stationary support on which said member is slidably mounted, said mechanism including a cam connected to said member to move it into a position slightly spaced from said means during the initial engagement of the presser with

the stamped package, and said sliding member being arranged to be engaged by said package advancing means during the further movement thereof and then moved therewith whereby said presser will initially serve to iron said stamp.

10. In a package stamper, the combination with a member for advancing packages successively into a predetermined position whereby the forward face of each package will be pressed against the rear face of the preceding package, of a device for applying a stamp to the top of the package being advanced by said member with an end projecting forwardly from the forward face of the package, a folder movable downwardly to fold the forwardly projecting stamp end down over the forward face of the package, and mechanism for actuating said folder and holding it against the folded stamp end while the forward face of the package advanced by said member is pressed against the rear face of the preceding package to press the folded stamp end against the forward edge of the package advanced by said member.

11. In a package stamper, the combination with a member for advancing packages successively into a predetermined position whereby the forward face of each package will be pressed against the rear face of the preceding package, of a device for applying a stamp to the top of the package being advanced by said member with an end projecting forwardly from the forward face of the package, a folder movable downwardly to fold the forwardly projecting stamp end down over the forward face of the package, and mechanism for actuating said folder and holding it against the folded stamp end while the forward face of the package advanced by said member is pressed against the rear face of the preceding package to press the folded stamp end against the forward edge of the package advanced by said member, said mechanism operating to partially withdraw said folder whereby its tip will serve to press the folded stamp end against the forward edge of the package advanced by said member.

12. In a package stamper, the combination with a member for advancing packages successively into predetermined position whereby the forward face of each package will be pressed against the rear face of the pressed package, of a device for applying a stamp to the top of the package being advanced by said member with its ends projecting from the forward and rear faces of the package, a folder movable downwardly to fold the forwardly projecting stamp end down over the forward face of the package, mechanism for actuating said folder and holding it against the forward stamp end while the forward face of the package advanced by said member is pressed against the rear face of the preceding package to press the forward stamp end against the forward edge of the package advanced by said member, and means for folding the trailing end of the stamp downwardly over the rear face of the package.

13. In a package stamper, the combination with a member for advancing packages successively into predetermined position whereby the forward face of each package will be pressed against the rear face of the pressed package, of a device for applying a stamp to the top of the package being advanced by said member with its ends projecting from the forward and rear faces of the package, a folder movable downwardly to fold the forwardly projecting stamp end down over the forward face of the package, mechanism for actuating said folder and holding it against the forward stamp end while the forward face of the package advanced by said member is pressed against the rear face of the preceding package to press the forward stamp end against the forward edge of the package advanced by said member, and means for folding the trailing end of the stamp downwardly over the rear face of the package, said member operating partially to withdraw said folder whereby its tip will serve to press the forward stamp end of the package engaged by said member and the trailing end of the preceding package against the forward and rear faces of their packages respectively.

14. In a package stamper, the combination with means for continuously advancing packages, of a device for applying a stamp to one face of a package advanced by said means with an end projecting therefrom at one side of the package, a member adapted to move over the side of the package at which said stamp end projects and wipe said stamp end thereover, and against said side, and mechanism supporting said member and moving forwardly along with the stamped package and at the same speed as the latter whereby said member is moved along at the same speed as the package while wiping said stamp end over and against the side of the package.

15. In a package stamper, the combination with means for continuously advancing packages, of a device for applying a stamp to one face of a package advanced by said means with an end projecting therefrom, a member for pressing the stamp against the face to which it has been applied, a separate member operating subsequent to the movement of said pressing member into position to press the stamp against the face to which it has been applied, for wiping said projecting end over and against the side of the package at which it projects, and mechanism supporting said members and moving forwardly along with the stamped package at the same speed as the latter.

16. In a package stamper, the combination with means for continuously advancing packages, of a device for applying a stamp to the top of a package advanced by said means with an end projecting therefrom at one side of the package, a member for pressing the stamp against the face to which it has been applied, and mechanism supporting said member and moving forwardly along with the stamped package at the same speed as the latter whereby said member is moved along at the same speed as the package while pressing the stamp against the face to which it was applied.

17. In a package stamper, the combination with means for continuously advancing packages, of a device for applying a stamp to the top of a package advanced by said means with an end projecting therefrom at the forward face of said package, a member adapted to move downwardly over the leading face of said package at which said stamp end projects and wipe said stamp thereover and against said leading face, and mechanism supporting said member and moving forwardly along with the stamped package and at the same speed as the latter whereby said member is moved along at the same speed as the package while wiping said stamp end downwardly against the leading face of the package, said means operating to advance said pack-

age to a predetermined point with its leading face engaging the rear face of the preceding package, and mechanism for actuating said member and maintaining it in engagement with the stamp end to press the same against the leading face of the package until the latter face engages the rear face of the preceding package.

18. In a package stamper, the combination with a device for applying a stamp to the face of a package, which has an outer wrapper which terminates in an edge on the sides of the package adjacent said face, with an end of the stamp projecting from said face at one side of said package; of a member for pressing said edge of the outer wrapper adjacent said face against the side of the package at which said stamp end projects to prevent gaping of said edge at said side; and mechanism for wiping said projecting stamp end over and against the side of the package at which said stamp end projects subsequent to the engagement of said member with said edge and while said edge is pressed against said side by said member.

CHARLES ARELT.