Dec. 24, 1946. B. G. CARLSON 2,413,214

AUTOMATIC PILOT DIRECTIONAL TURN INDICATOR

Filed March 3, 1944

Fig. 1.

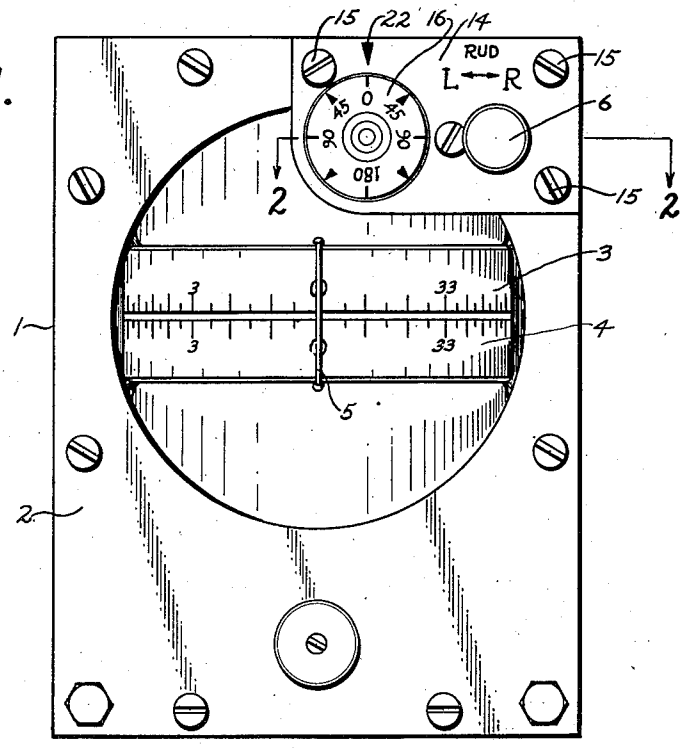

Fig. 2.

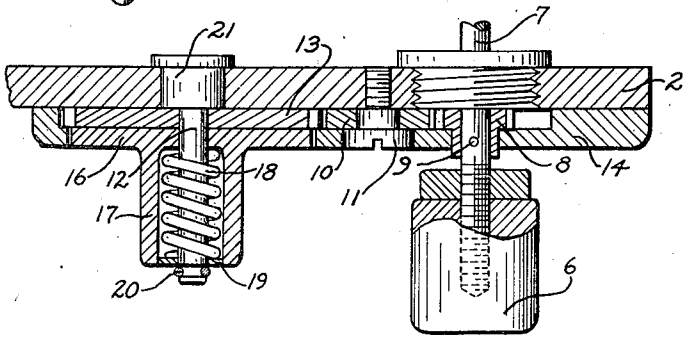

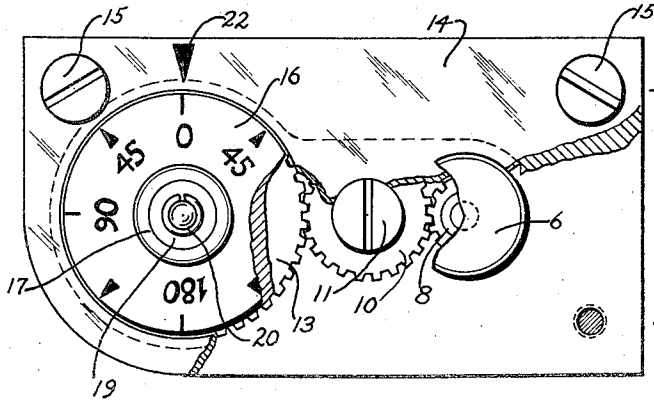

Fig. 3.

INVENTOR.
BERT G. CARLSON
BY
ATTORNEY

Patented Dec. 24, 1946 2,413,214

UNITED STATES PATENT OFFICE

2,413,214

AUTOMATIC PILOT DIRECTIONAL TURN INDICATOR

Bert G. Carlson, Gates Mills, Ohio, assignor, by mesne assignments, to Jack & Heintz Precision Industries, Inc., Cleveland, Ohio, a corporation of Delaware

Application March 3, 1944, Serial No. 524,953

4 Claims. (Cl. 116—124)

1

The present invention relates to a directional turn computor for use with the gyro turn unit of an automatic pilot and the object of the invention is to provide an indicator which will show directly on a dial the amount of turn in degrees set into the automatic pilot.

In flying a pattern or a series of patterns involving a succession of 45, 90 or 180 degree turns, the resetting of the upper card of the automatic pilot to the new heading for each turn always involves the possibility of a pilot's error in calculating the new course. Where a plurality of aircraft are flying in closed patterns at different levels over an airport awaiting permission to land, it is frequently necessary to fly in such patterns for long periods of time until permission is granted, requiring the pilot to execute such turns periodically at short intervals in order to remain in the vicinity of the airport for a landing as soon as permission is given from the control tower.

The present invention relates to an accessory indicating device which may be applied to conventional automatic pilot turn unit boxes to indicate directly the amount of turn being made whereby the pilot is not required to calculate new headings in degrees azimuth. The invention will now be described with reference to the accompanying drawing in which:

Figure 1 is a front elevation view of an automatic pilot turn unit box embodying the present invention;

Figure 2 is an enlarged sectional view taken approximately on the line 2—2 of Figure 1; and

Figure 3 is an enlarged front elevation view of the present device with parts broken away.

In Figure 1 the numeral 1 refers to a turn unit generally which is of a conventional type having a front panel 2 with a window presenting upper and lower compass cards 3 and 4 rotatably mounted on a vertical axis behind a lubber line 5. The lower card 4 is the gyro card showing the actual course or heading in azimuth and the upper card 3 is a reference card to indicate the desired heading set into the automatic pilot through the manual knob 6 on the rudder control shaft 7. These parts are conventional in an automatic pilot turn unit.

The present indicator is designed as an accessory device to be applied over the face of the panel 2 in the upper right hand corner for operation by the rudder control shaft 7. The rudder control shaft 7 has a small pinion gear 8 fixed thereto by means of a pin 9 in driving engagement with an idler gear 10 mounted on a bearing screw 11 secured in a plate 2. A post 12 is

2

also mounted on the panel 2 to extend forwardly therefrom and carries a gear 13 rotatably mounted thereon in mesh with the idler gear 10. The gears are enclosed and held in meshing relation at all times by an open backed casing 14 which may be secured to the turn unit box by means of the screws 15 or the like. Casing 14 is provided with a circular opening accommodating a circular index plate 16 flush with the front face of the casing and mounted for rotation on the post 12. The index plate 16 includes an outstanding hollow knob 17 housing a spring 18 bearing against a washer 19 retained on the post 12 by means of a snap ring 20 or the like. The spring 18 is arranged to press the indicating plate 16 against the gear 13 so that the plate and gear normally revolve together when the gear is rotated by the pinion 8. To facilitate this rotation, the mounting means for the post 12 may include a bearing 21 so as to make the post independently rotatable.

The above described structure in no way interferes with or modifies the operation of the automatic pilot turn unit inasmuch as the gears 10 and 13 and the indicator 16 are merely rotated freely when the rudder knob 6 is turned, these additional parts exerting no appreciable drag or influence thereon. The indicator 16 is preferably provided with markings to indicate 45 degree angles right and left from zero to 180 degrees as shown. The setting of the indicator 16 is accomplished whenever desired by merely withdrawing the plate portion of the indicator out of contact with the gear 13 against the force of the spring 18 so that the indicator will rotate freely without tending to drive the gear. Upon release of the knob 17, the spring 18 returns the indicator into engagement with the gear 13 to be driven thereby upon rotation of the rudder knob 6.

In use, the indicator 16 is normally set to zero with respect to an index 22, as illustrated, for the course being flown, it being understood that this zero indication does not necessarily require a zero indication on the cards 3 or 4. For instance, the heading set on the card 3 may be 25 degrees azimuth with the indicator 16 set to zero. If, for example, it is desired to make a 45 degree left turn from the assumed heading of 25 degrees, the rudder knob 6 is rotated counterclockwise for a left turn until the appropriate 45 degree marking on the indicator 16 is brought into line with the index 22, and when this is accomplished the new heading on the card 3 will read 340 degrees without calculation on the part of the pilot to obtain this figure. In order to ac-

complish this result with the dial markings shown, the gear ratio between the pinion 8 and the gear 13 must be the same as the gear ratio between the shaft 7 and the card 3.

In this manner 45 degree, 90 degree or 180 degree changes of course, either right or left, may be set into the upper card 3 expediently without error from miscalculation. This is of especial assistance to the pilot in flying a small closed pattern while keeping his mind on the many other things requiring his attention immediately prior to landing.

I claim:

1. In an automatic pilot turn unit comprising a gyro compass card having a course indicator card adjacent, a rudder control shaft operatively connected to said course indicator card, a casing secured to the face of said unit and receiving said rudder control shaft, a rotatable indicator dial in said casing simultaneously observable with said compass and indicators cards and means in said casing for driving said dial from said shaft and means for interrupting said driving engagement for setting said dial independently of said shaft.

2. An automatic pilot turn unit comprising a gyro compass card having a course indicator card adjacent, a rudder control shaft operatively connected to said course indicator card, a casing adapted to be secured to the front face of said unit and to receive said rudder control shaft, a gear train in said casing arranged to be driven by said shaft, an indicator dial simultaneously observable with said compass and indicator cards and adapted to be driven by said gear train and means to interrupt the driving engagement between said indicator and gear train for setting said indicator independently thereof.

3. An indicating device for use with an automatic pilot turn unit comprising a gyro compass card having a course indicator card adjacent, a rudder control shaft operatively connected to said course indicator card, a casing adapted to be secured to the face of said unit and to receive the rudder control shaft of said unit, a gear arranged to be driven by said shaft, an indicator dial simultaneously observable with said compass and indicator cards mounted for independent rotation adjacent said gear, a spring for urging said dial against said gear to be driven thereby upon rotation of said shaft and a knob on said dial for disengaging said dial from said gear for independent rotation.

4. An indicating device for use with an automatic pilot turn unit comprising a gyro compass card having a course indicator card adjacent, a rudder control shaft operatively connected to said course indicator card, a casing adapted to be secured to the face of said unit and to receive the rudder control shaft of said unit, a gear arranged to be driven by said shaft, a post for mounting said gear, an indicating dial simultaneously observable with compass and indicator cards and having a flat face presented toward said gear and provided with a hollow hub-like knob projecting outwardly therefrom mounted on said post adjacent said gear, and a spring within said hub for urging the inner face of said dial into frictional driving engagement with said gear whereby said dial may be withdrawn by said hub from said driving engagement for independent rotation.

BERT G. CARLSON.