Aug. 24, 1943. W. C. TOLAND ET AL 2,327,380

NEGATIVE ELEMENT

Filed Nov. 13, 1941

Fig. 1.

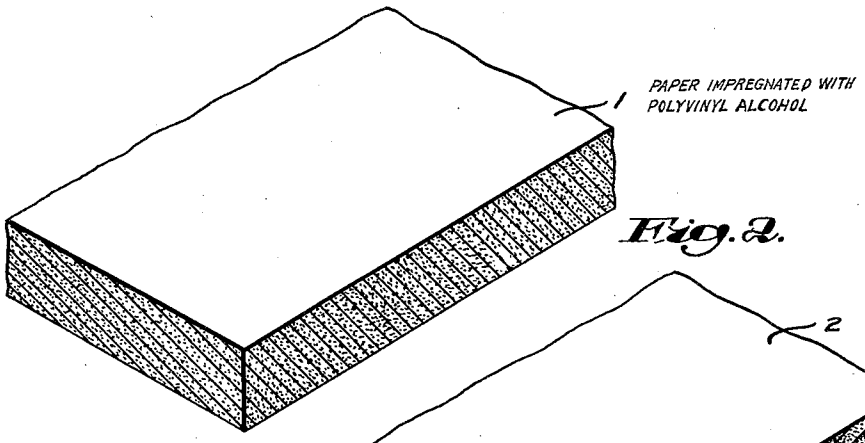

Fig. 2.

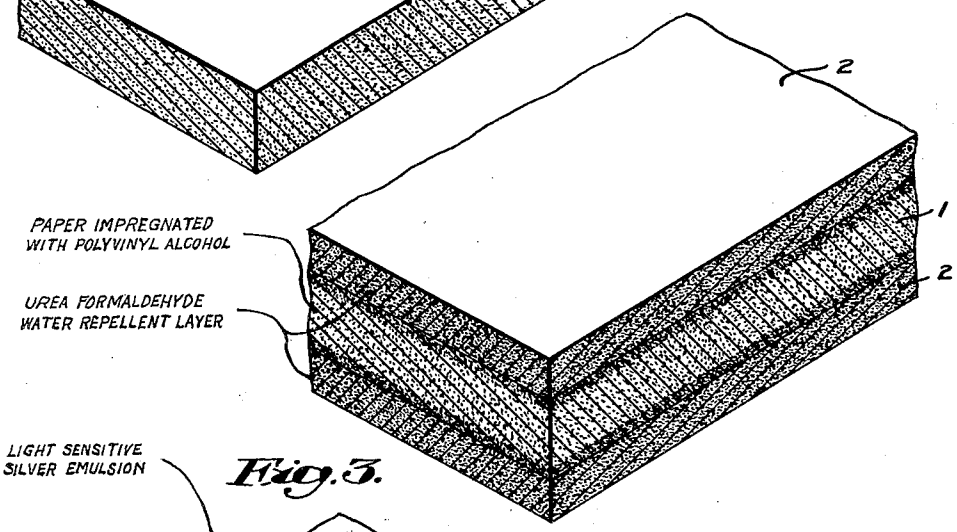

Fig. 3.

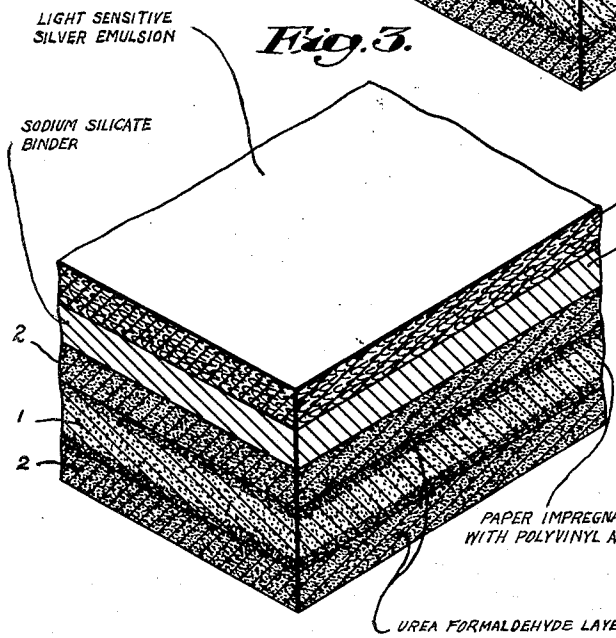

Fig. 4.

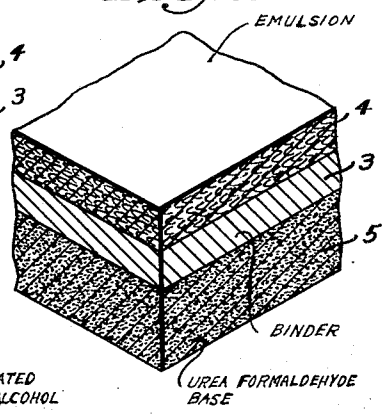

Inventors:
William C. Toland
Ellis Bassist
Marion N. Hamilton
Attorney

By

Patented Aug. 24, 1943 2,327,380

UNITED STATES PATENT OFFICE

2,327,380

NEGATIVE ELEMENT

William Craig Toland and Ellis Bassist, Brookline, Mass., assignors to William C. Toland, trustee

Application November 13, 1941, Serial No. 418,948

6 Claims. (Cl. 95—8)

This invention relates to light-sensitive elements and more especially to a light-sensitive element adapted to be formed into a photographic negative.

A principal object of the invention is to improve light-sensitive elements and to devise of resin materials, or paper and resin materials, a flexible translucent light-sensitive element which may be exposed and developed to provide a photographic negative and which is adapted to withstand immersion in developing liquids without stretching or shrinking. Another object of the invention is to combine with a water-repellent paper base a substantially uniform coating of a light-sensitive emulsion. The invention also aims to provide a simple, cheap, durable light-sensitive element which may be easily and quickly exposed and developed.

The nature of the invention and its objects will be more fully understood from the following description of the drawing and discussion relating thereto.

In the accompanying drawing:

Fig. 1 is an enlarged fragmentary perspective view illustrating a sheet material employed in preparing a light-sensitive element of the invention;

Fig. 2 is an enlarged fragmentary perspective view illustrating a further step in making the light-sensitive element referred to;

Fig. 3 is a fragmentary perspective view illustrating further coating steps; and

Fig. 4 is a fragmentary perspective view illustrating a modification of the invention.

In making a photographic negative, it is desirable to employ a base element which will not stretch or shrink, to any appreciable extent, when immersed in liquids utilized for developing exposed light-sensitive coatings supported on the base. At the same time, it is necessary to have a translucent base element and to provide a surface on the base element which is wettable by light-sensitive emulsions and which will allow a uniform coating to be smoothly applied thereto.

In one type of light-sensitive element commonly referred to as dry plates, it has been customary to utilize a base of glass, and to apply over the glass a ground coating which allows the light-sensitive emulsion to be thereafter uniformly spread over the base. The use of the glass is objectionable for several reasons. It is rigid, heavy, hard to handle, especially in larger sizes, and relatively expensive. A product which is flexible and which is substantially resistant to stretching and shrinking when immersed in liquids is much in demand.

In accordance with the invention, we have provided a light-sensitive element, in a preferred embodiment of which paper and resin materials have been combined to provide a flexible translucent sheet material which is water-repellent and which will resist stretching or shrinking when immersed in liquids such as aqueous suspensions of the type resorted to in the development and formation of photographic negatives.

This result has been obtained by combining water-repellent layers with the paper in such manner that the developing liquids are prevented from coming into contact with the paper and yet a suitable amount of flexibility is preserved. A small amount of one type of resin is impregnated in the paper and limited amounts of a second type of resin material are applied thereover.

Referring more in detail to the drawings, in Fig. 1 we have illustrated an impregnated paper 1, preferably uitlized in preparing the light-sensitive element of the invention. The paper 1 consists of a tough paper, as a kraft paper for example, in which is impregnated a sizing agent such as polyvinyl alcohol and other vinyl compounds. It may further be desired to utilize, as a sizing agent, rosin size in amounts substantially greater than are usually employed in paper making, and also rosin size and a vinyl compound may be used in conjunction with one another.

The polyvinyl alcohol, or other sizing agent, used for impregnating may be of a type which is water-receptive or water-absorbent to a slight degree, and is dispersed throughout the paper fibers to bind the paper fibers together, improve the strength of the paper, and preserve small moisture retention by the paper for extended periods of time. Other water-receptive colloids as gelatin, glue and others may be employed as impregnating agents in place of the polyvinyl alcohol.

Over the paper element 1 are applied thin layers 2 of a water-repellent material. The water-repellent layers are preferably obtained from an aqueous dispersion of a urea formaldehyde resin glue, for example a resin of the type commercially termed "Plaskon." This urea formaldehyde resin glue is illustrative of a water-repellent coating material which is adapted to set from an aqueous dispersion to a water-insoluble state. Other resins of this character, such as "Casco" and the like, may be employed.

The layers of water-repellent resin 2 are caused to lightly impregnate either side of the paper

element 1 and to strike into the edges of the paper element 1 for the purpose of rendering the paper element 1 substantially water-resistant. At the same time only limited amounts of the resin enter into the paper.

It has been found that if an excess of a waterproofing resin is applied to paper, the paper tends to become highly brittle and unfit for use as a light-sensitive element. In accordance with the invention, we may rely on the impregnated polyvinyl alcohol limiting the amount of impregnation of the paper by the water-repellent resin. The small amounts of polyvinyl alcohol occurring at separated points in and around the paper fibers tend to prevent the resin glue from striking into or around the fibers in these areas and thus preserves normal paper flexibility at some points which generally prevents objectionable brittleness. The partial impregnation of the paper by the resin has been diagrammatically illustrated in Figs. 2 and 3.

The impregnated paper carrying the water-repellent layers 2 is thereafter coated with a translucent coating 3, of a material which will allow a uniform film of an aqueous light-sensitive emulsion to be applied thereto. One suitable translucent coating material is sodium silicate. Other similar substances as albumin and the like may be utilized. Over the coating 3 is applied a film of a light-sensitive emulsion 4 (as for example gelatin and a silver haloid), which is uniformly applied to the surface of the coating 3 and which is disposed out of contact with the water-repellent layer 2 of urea formaldehyde resin glue. The coated paper is then allowed to dry and arranged in sheet or roll form in accordance with sizes which may be desired.

An important feature of the invention is the combination of a translucent paper with layers of water-repellent material to provide a sheet element which will not stretch or shrink when immersed or otherwise exposed to water and which at the same time is not brittle. The use of a water-receptive impregnating medium dispersed at separated points limits the extent of impregnation by the water-repellent resin material to a point at which no objectionable brittleness is present in a waterproof sheet.

Another important feature of the invention is the arrangement of subsequent coatings over the water-repellent resin at one side of the paper. The water-repellent material 2, if brought into direct contact with a coating of a light-sensitive emulsion such as a silver salt, has an injurious effect on the coating, tending to impair its efficiency. In addition, the water-repellent character of the layer 2 prevents an aqueous emulsion from being coated thereon in a uniform smooth film which is necessary to the formation of a suitable photographic negative member.

The intermediate coating 3 serves two functions in overcoming the difficulties noted. First, the coating 3 provides a protective layer or thickness of material between the water-repellent resin and the light-sensitive emulsion, which has been found to prevent any injurious effect by the water-repellent resin on the light-sensitive coating. Second, the coating 3, by being composed of a substance which has affinity for aqueous suspensions, presents a surface upon which the light-sensitive coating 4 may be readily applied in a smooth uniform film such as is required for the formation of a photographic negative.

It is pointed out that application of the intermediate coating 3 and bonding of the coating to the water-repellent layer 2 is facilitated by disposing the coating 3 on the layer 2 before the layer has set to a fully water-insoluble state, and while a certain amount of affinity for aqueous suspensions is present. Such a procedure allows these two materials to be satisfactorily brought together and therafter to dry together in properly bonded relation. The combination with the protective coating 3 of a water-repellent layer 2 which passes from a water-wettable state to a water-repellent condition, is especially desirable and constitutes a further aspect of the invention.

It is pointed out that the combination of coating materials set forth preserves the necessary translucency throughout the sheet, and does not greatly increase the weight or body of the sheet so that a flexible, light and cheap product is obtained.

Some of the features above noted may be incorporated, in part or in whole, with modified base elements. In Fig. 4 we have illustrated a light-sensitive element made up of a base 5 over which is disposed the coating 3 and film of light-sensitive emulsion 4, in the manner already described. The base 5 consists of a film of a urea formaldehyde resin glue, such as Plaskon, which does not include paper. A film of the resin glue may for some purposes be sufficiently cheap and flexible to serve as a light-sensitive element.

It will be seen that we have provided a flexible paper base element which is resistant to stretching and shrinking when immersed in liquids utilized in the photographic exposure and development. Uniform application of light-sensitive materials on this element has been carried out and suitable bonding provided for. A simple, cheap, light and durable product is provided, which is well adapted to being formed into a photographic negative, with maintenance of accurate dimensions.

While we have shown a preferred embodiment of our invention, it should be understood that various changes and modifications may be resorted to, in keeping with the spirit of the invention as defined by the appended claims.

We claim:

1. A flexible light-sensitive element for use in preparing a photographic negative comprising a translucent paper which is impregnated with polyvinyl alcohol disposed at separated points in and around the fibers of the paper, layers of translucent water-repellent material disposed at either side of the paper and impregnated in and around portions of the paper in amounts limited by the polyvinyl alcohol to avoid brittleness, said water-repellent material including a urea formaldehyde resin glue, a coating of sodium silicate disposed over one of the water-repellent layers, a film of a light-sensitive emulsion of gelatin and a silver haloid, overlying the sodium silicate, said sodium silicate being effective in allowing a uniform film of the light-sensitive emulsion to be applied over the water-repellent coating and to be held in bonded relation thereto.

2. A flexible light-sensitive element for use as a photographic negative element comprising a translucent paper which is impregnated with a vinyl compound, layers of a translucent water-repellent urea formaldehyde resin glue coated over either side of the paper, said urea formaldehyde resin glue being adapted to render the paper resistant to stretching and shrinking when immersed in water, and said vinyl compound be-

ing adapted to prevent penetration of the paper fibers by the urea formaldehyde resin glue in amounts sufficient to cause cracking of the paper, a coating of a translucent binding material disposed over one of the water-repellent layers, and a film of a light-sensitive emulsion overlying the said coating of binding material.

3. A flexible light-sensitive element adapted to be photographically exposed and developed to provide a photographic negative, said light-sensitive element comprising a translucent paper which is impregnated with a vinyl compound, layers of a translucent water-repellent material coated over either side of the paper, said water-repellent layers obtained from an aqueous dispersion of a urea formaldehyde resin glue of the type which sets to a water-insoluble state, an intermediate translucent coating disposed over one of the water-repellent layers, a film of a light-sensitive emulsion overlying the intermediate coating, said intermediate coating adapted to facilitate the uniform application of the light-sensitive emulsion in a film, and to secure the light-sensitive emulsion in bonded relation to the water-repellent layer.

4. As an article of manufacture a light-sensitive element comprising paper, waterproofing layers overlying and impregnated in the paper, said waterproofing layers including a water-soluble resin and an agent for hardening the resin through a water-wettable, partially dried, non-tacky stage to a water-repellent fully dried state, a sizing in the paper in amounts suitable for preventing the waterproofing material from rendering the paper brittle, an intermediate coating of water-wettable material and a film obtained from a light-sensitive emulsion overlying the intermediate coating.

5. A flexible light-sensitive element comprising a translucent paper, layers of translucent water-repellent material coated over either side of the paper, said water-repellent material including a urea formaldehyde resin and an agent for hardening the resin through a partially dried, non-tacky, water-wettable stage to a fully dried water-repellent state, a translucent water-wettable coating disposed over one of the water-repellent layers, a film of a light-sensitive emulsion overlying the water-wettable coating.

6. A flexible light-sensitive element adapted to be photographically exposed and developed to provide a photographic negative, said light-sensitive element comprising a base which includes a translucent urea formaldehyde resin, said resin being characterized by the property of setting slowly to a partially dried, water-wettable, non-tacky condition and then hardening into a fully dried water-repellent state, an intermediate translucent coating disposed over the said resin at one side of the light-sensitive element, and a film of a light-sensitive emulsion overlying the intermediate coating.

WILLIAM CRAIG TOLAND.
ELLIS BASSIST.