Oct. 13, 1936. G. ECKERBOM 2,057,563

MANUFACTURE OF GLUE FILMS

Filed June 22, 1933

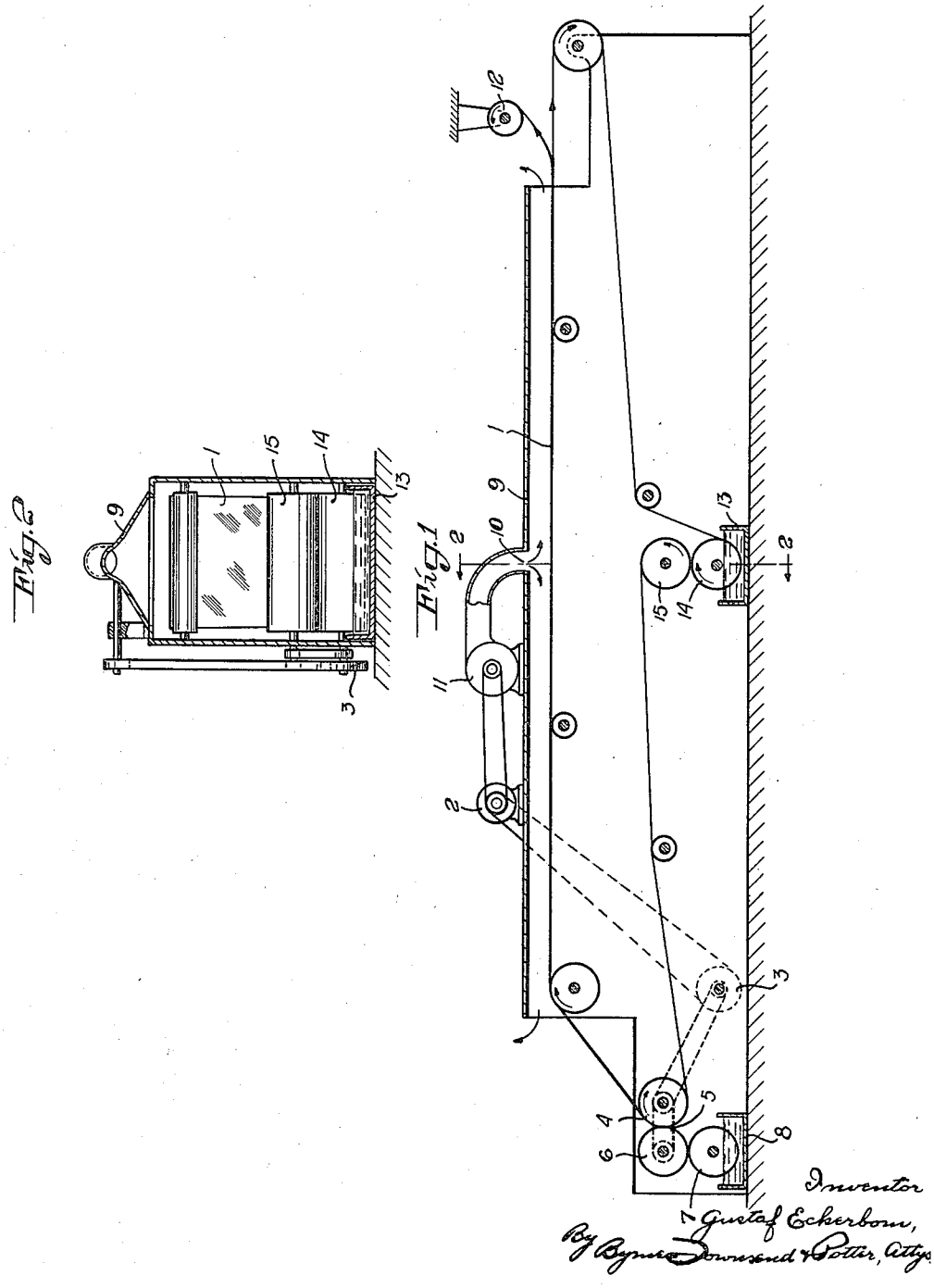

Patented Oct. 13, 1936

2,057,563

UNITED STATES PATENT OFFICE

2,057,563

MANUFACTURE OF GLUE FILMS

Gustaf Eckerbom, Sandvik, Stockholm, Sweden, assignor to Stockholms Benmjölsfabriks Aktiebolag, Stockholm, Sweden, a corporation of Sweden

Application June 22, 1933, Serial No. 677,163
In Sweden July 5, 1932

2 Claims. (Cl. 18—57)

The present invention relates to a method and an apparatus for the manufacture of glue films, i. e. glue in the form of long thin pieces. The term "glue" in the following description as well as in the appended claims is to be understood as comprising glue of any kind, such as animal glue, especially bone glue, hide glue, leather glue, casein glue, blood albumin glue or mixtures of two or more kinds of glue.

According to one embodiment of the invention liquid glue or glue which is dissolved in a suitable solvent is applied to an endless moving support of suitable material having the property of readily parting with the glue film, e. g. of paraffined or oiled paper, oil-cloth or the like, the drying of the film or the removal of solvent being completed while the film is still on the support, after which the dried film is removed—preferably continuously—from said support. The liquid or dissolved glue is preferably applied to the support by means of one or more rollers, at least one of which may engage said support. In a preferred embodiment the support is passed between rollers, at least one of which guides the support and at least one of which supplies liquid or dissolved glue to said support. At the point of applying the liquid or dissolved glue the support may move in engagement with a guide roller partly encircling said roller.

Another important feature of the invention as applied to the manufacture of glue films by supplying the liquid or dissolved glue to an endless moving support consists therein that the support is oiled, paraffined or rendered lubricous or glue repellent in other ways—preferably continuously—during the operation, the glue film applied on the glue repellent surface of said support being allowed to dry more or less.

The drying operation is preferably carried out by passing the moving support with its coating of liquid or dissolved glue through a drying device (e. g. a channel through which a heated gaseous medium is caused to flow along the support), surrounding at least a portion of the path of the support, in which device the glue film is completely dried before leaving said device. One wall of such channel may be formed by the moving band support itself.

These and other features of the invention will be described more fully hereinbelow with reference to the attached drawing in which Fig. 1 is a cross-sectional elevation and Fig. 2 a sectional view on line 2—2 in Fig. 1 of a preferred embodiment of an apparatus for carrying out the method.

An endless band support 1 is guided over a plurality of rollers and is kept moving by a motor 2 which drives a pulley 3 which in its turn drives another pulley secured to the shaft of a guide roller 4 engaging the endless support 1. By means of a belt 5 a rotary movement is imparted to another roller 6 which frictionally engages and drives a third roller 7 a portion of which is immersed in a glue solution contained in a vessel 8. The glue solution may comprise substances which render the glue soft and flexible after drying, such as glucose, glycerine, etc. From the roller 7 the glue solution is wiped off in homogeneous thickness by means of the adjacent roller 6 which applies the solution to the support 1 as a coating or layer of homogeneous thickness. It is not necessary that the roller 6 should contact with the support, and in fact it is preferred to allow a small space between the periphery of the roller 6 and the support 1 at the point where glue is applied whereby a meniscus of the glue solution is constantly maintained between the periphery of roller 6 and the support guided over roller 4. Moreover, means may be provided for altering the distance between the shafts of rollers 4 and 6 at will whereby the thickness of the glue film can be varied.

It has previously been proposed to pour liquid glue onto a moving support, but obviously such a method suffers from several drawbacks which are obviated by applying the glue by means of a system of rollers as described above, since such application permits of compensating for irregularities in viscosity and temperature of the liquid glue and promotes the formation of a homogeneously thick glue film on the support 1. It should be understood, however, that the invention is not limited to the use of application devices as above described, since there may be used for applying the glue solution onto the support any of the known applying devices of the bookbinder, paper or joining trades.

As previously stated the band support is continuously moved in the direction indicated by the arrows. From the point of applying the glue it travels together with its glue coating through a heating device which may consist of a casing 9 surrounding at least a portion of the path of movement of the band support. In the embodiment shown on the drawing a channel is formed between the sheet metal casing 9 and the surface of the moving band support with its glue coating. The drying operation, i. e. the solidification of the liquid or dissolved glue, is promoted by the introduction into said channel of heated air at 10 by means of a fan 11 which is driven by

the motor 2, said heated air passing along the support as indicated by the arrows in Fig. 1. By driving the support and the fan from a single common motor the quantity of glue taken up by the support will correspond with the rate at which air is blown into the drier. When the rollers 4 and 6 are running faster the quantity of glue applied to the support per unit of time will be increased but simultaneously the fan will also be driven at a greater speed and a larger amount of air will be blown into the drier. In the drier the whole or at least a substantial portion of the moisture is driven off, and on the support there will remain a glue film which is more or less dry. At one end point of the support the glue film is dry or substantially dry; the film is pulled off and wound upon a separate roller 12. In order to make the drying device shorter the support may be guided in zig-zag within the drying device over suitably disposed rollers, whereby the drying capacity of the apparatus for a given length of the same is increased.

With the use of this device a continuous manufacture of glue films in the form of long sheets may be effected. Instead of winding the glue film upon a roller one may obviously, if desired, pass the said film through a cutting machine so as to obtain glue sheets of any desired size.

In carrying out the method it is of the utmost importance that one use a support which will readily part with the more or less dry glue film without disruption of the latter. The support may consist of paraffined paper, but obviously one may use other materials than paper, such as fabrics or the like, if desired treated with paraffin or linseed-oil compositions, such as oil-cloth or the like, whereby the surface of the support will permit of the removal of the dry film without rupture. To secure an irreproachable removal of the film from the support the latter, as shown in the drawing, may be paraffined or rendered lubricous or glue repellent in other ways on its path from the point where the glue film is stripped off (roller 12) to the point where the glue is applied (rollers 4, 6), said paraffining or the like preferably being effected continuously during the operation. To this end one may use for instance a bath 13 of molten paraffin into which the support dips whilst being guided by rollers 14, 15, the lower roller 14 being partly immersed in said bath.

What I claim is:—

1. Method for the manufacture of glue films which comprises continuously moving an endless support adapted to receive a film of glue between a pair of rollers one of which serves to guide the support in a fixed path and the other of which serves to apply a continuous film of glue thereto, drying the glue film on said support, continuously removing the dried film from the support, and continuously coating the support with a lubricous material in its passage between the point at which the dried glue film is removed and the point at which the glue film is applied thereto.

2. In a method for the manufacture of glue films which comprises continuously moving an endless support adapted to receive a film of glue, continuously applying liquefied glue to said support, continuously solidifying the film by drying and removing it from the support, the step which consists in continuously treating the support with a material which is indifferent to the glue to render it glue-repellent in its passage between the point at which the formed glue film is removed and the point at which the liquefied glue is applied thereto.

GUSTAF ECKERBOM.