Oct. 19, 1937. H. N. ENSIGN ET AL 2,096,231

HORIZONTAL TYPE FILM DEVELOPING AND DRYING MACHINE

Original Filed March 13, 1935 5 Sheets-Sheet 1

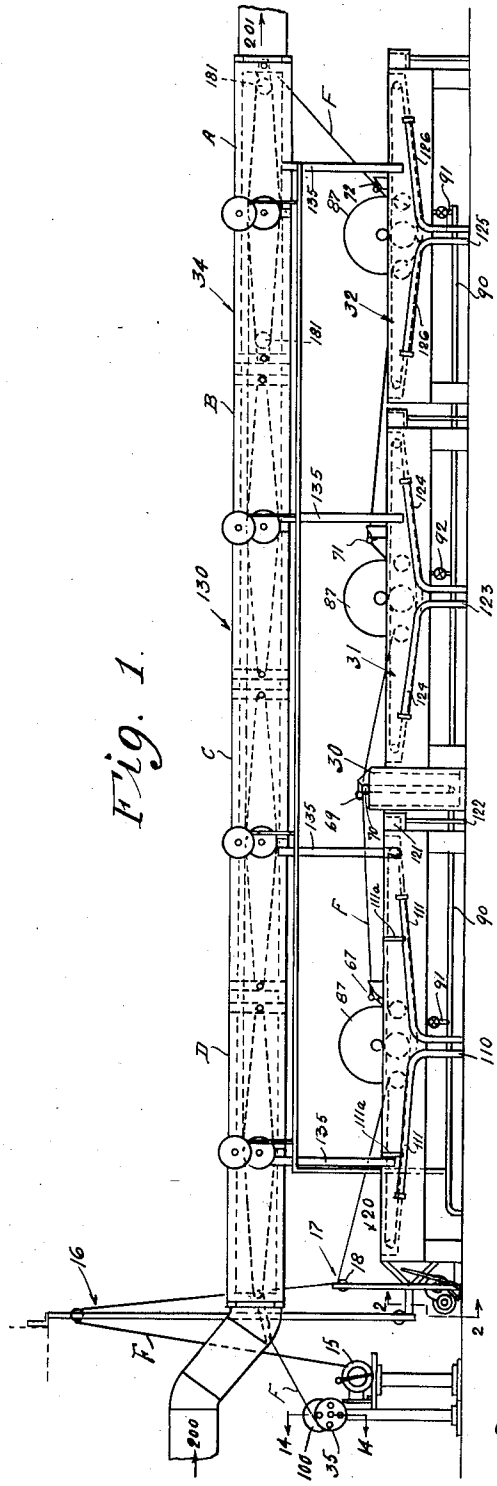

Fig. 1.

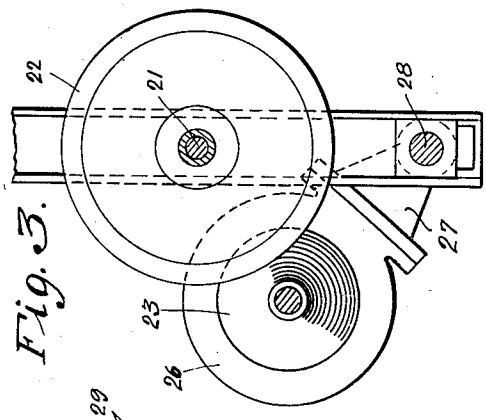

Fig. 3.

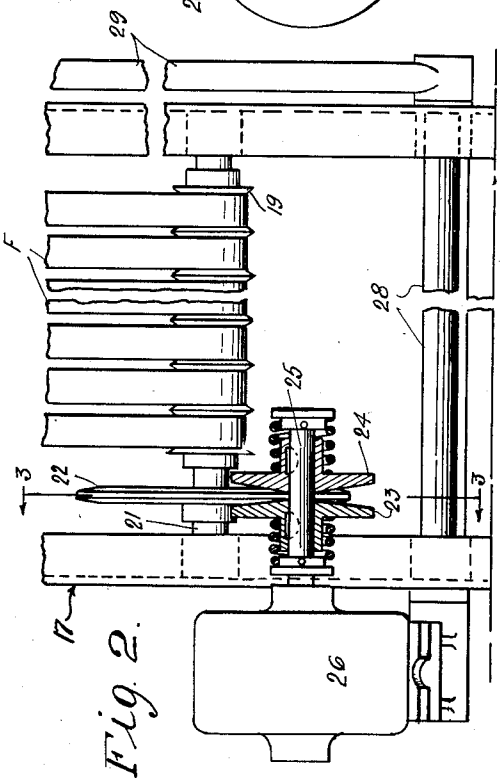

Fig. 2.

Inventors
Harris N. Ensign.
Harry A. Hanson.

John T. Pritchett

Attorney.

Oct. 19, 1937. H. N. ENSIGN ET AL 2,096,231

HORIZONTAL TYPE FILM DEVELOPING AND DRYING MACHINE

Original Filed March 13, 1935 5 Sheets-Sheet 2

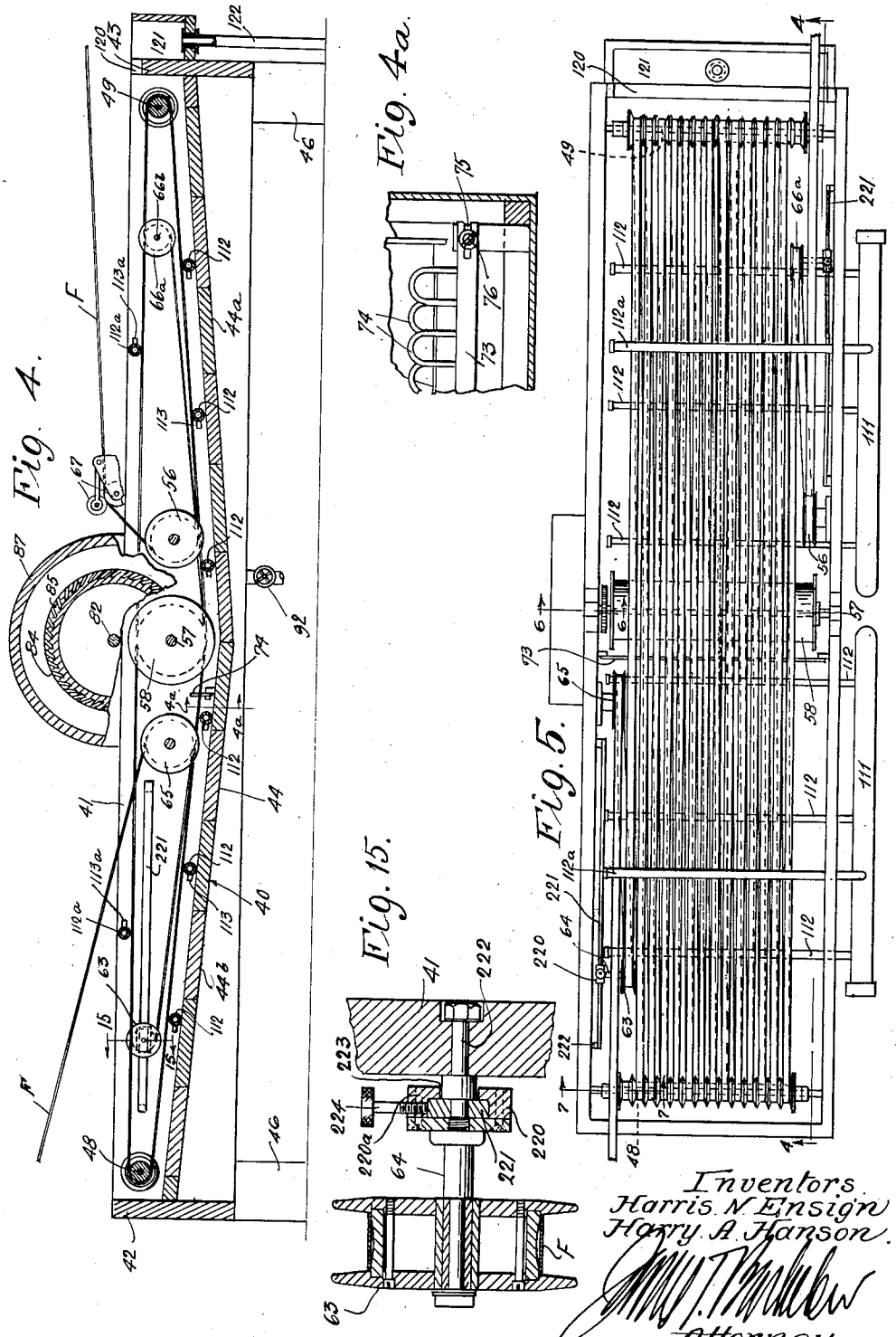

Inventors
Harris N. Ensign
Harry A. Hanson
[signature]
Attorney.

Oct. 19, 1937. H. N. ENSIGN ET AL 2,096,231

HORIZONTAL TYPE FILM DEVELOPING AND DRYING MACHINE

Original Filed March 13, 1935 5 Sheets-Sheet 3

Fig. 6a.

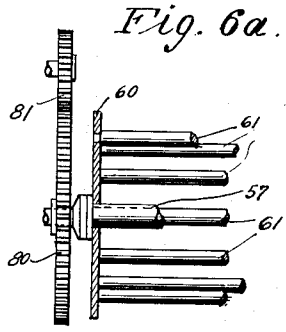

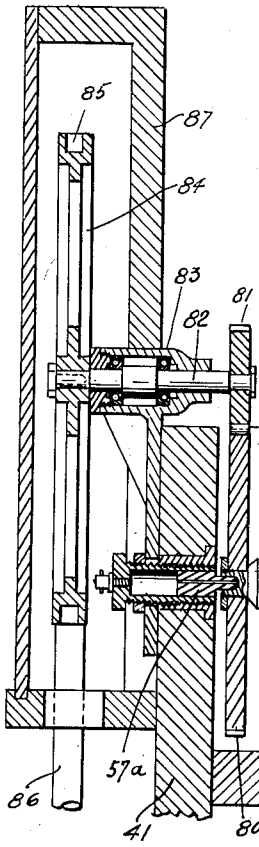

Fig. 6.

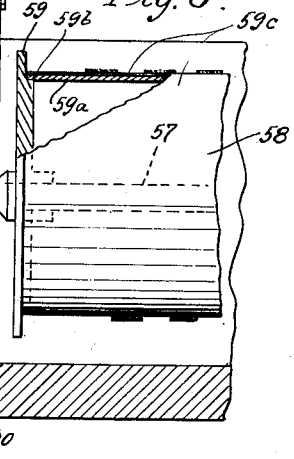

Fig. 14.

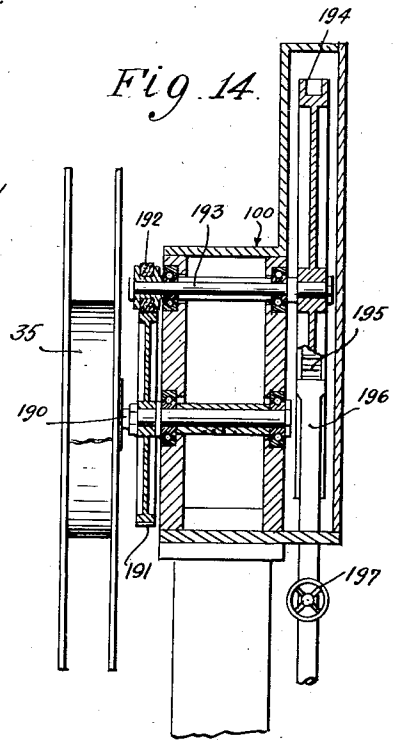

Fig. 13.

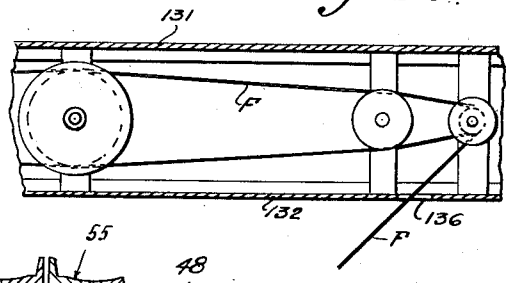

Fig. 7.

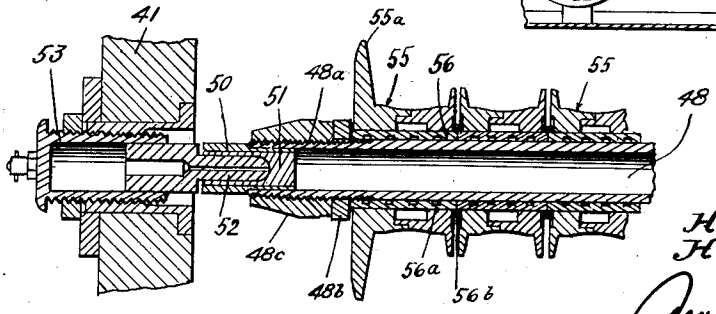

Inventors.
Harris N. Ensign
Harry A. Hanson

Attorney.

Oct. 19, 1937. H. N. ENSIGN ET AL 2,096,231

HORIZONTAL TYPE FILM DEVELOPING AND DRYING MACHINE

Original Filed March 13, 1935 5 Sheets-Sheet 4

Fig. 8.

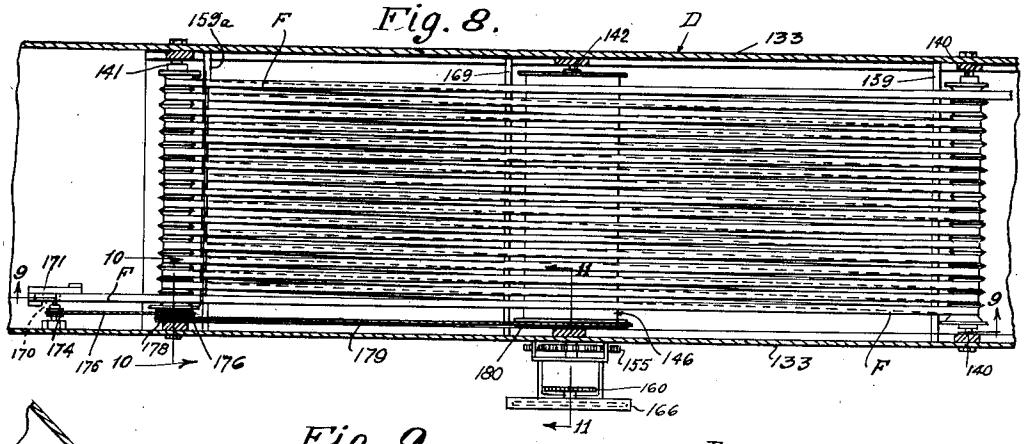

Fig. 9.

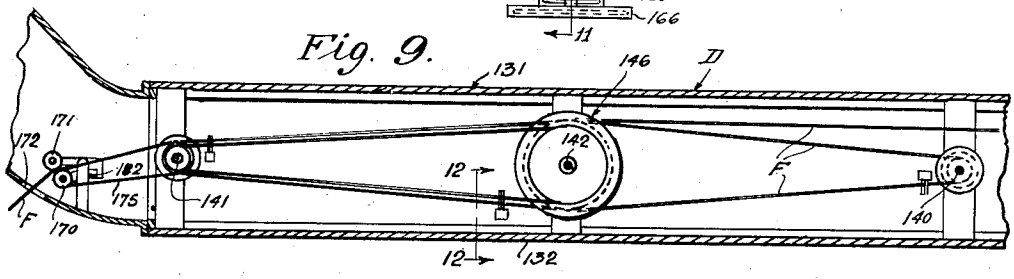

Fig. 10.

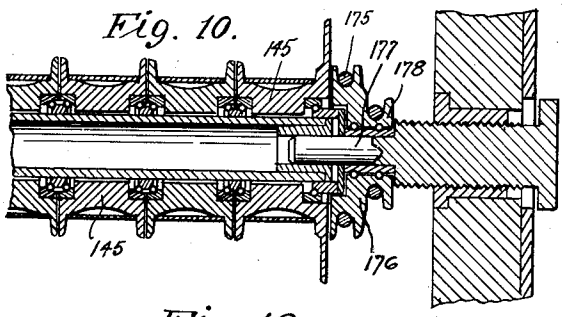

Fig. 11.

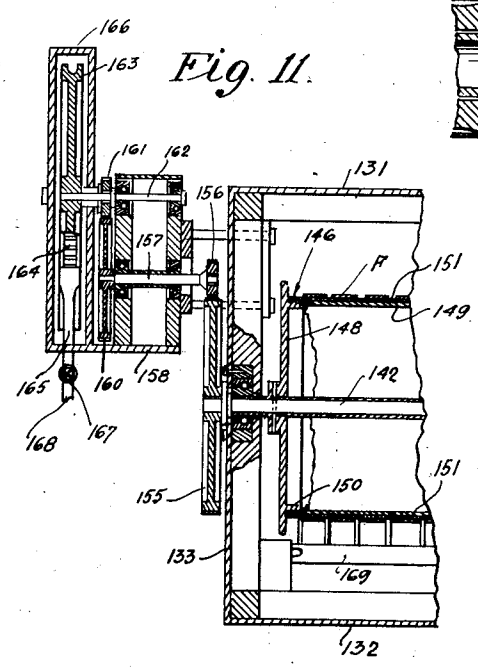

Fig 12.

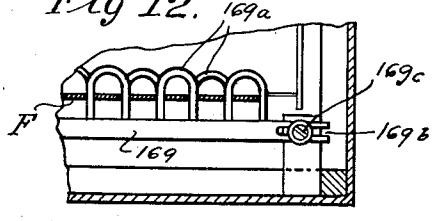

Inventors
Harris N. Ensign.
Harry A. Hanson.

Oct. 19, 1937. H. N. ENSIGN ET AL 2,096,231

HORIZONTAL TYPE FILM DEVELOPING AND DRYING MACHINE

Original Filed March 13, 1935 5 Sheets-Sheet 5

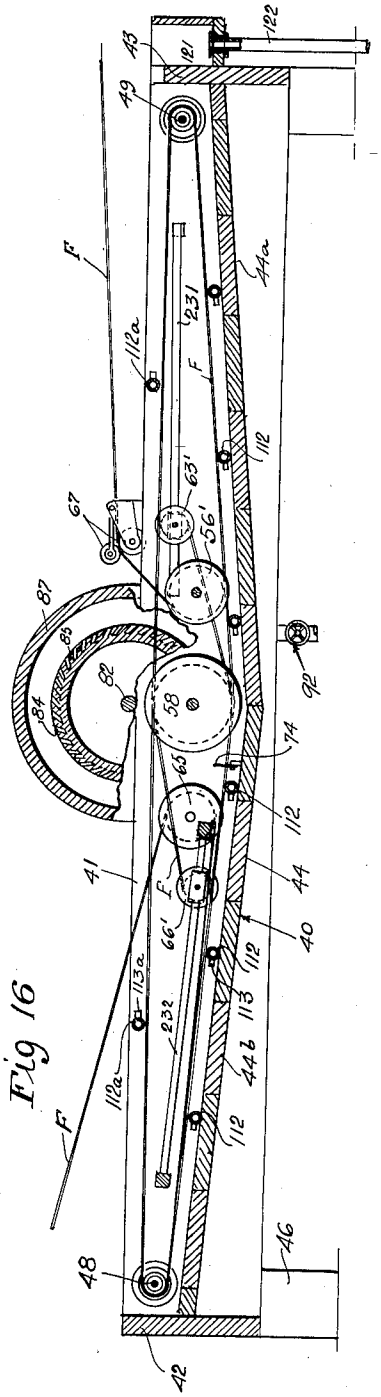

Fig 16

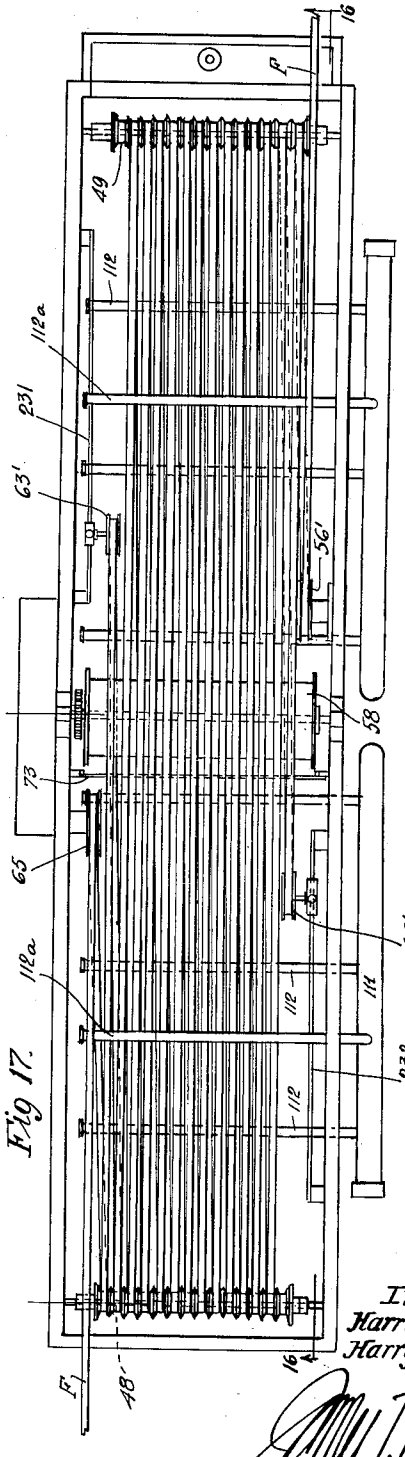

Fig 17.

Inventors.
Harris N. Ensign.
Harry A. Hanson.
By James J. Mathews
Attorney.

Patented Oct. 19, 1937

2,096,231

UNITED STATES PATENT OFFICE

2,096,231

HORIZONTAL TYPE FILM DEVELOPING AND DRYING MACHINE

Harris N. Ensign, Los Angeles, and Harry A. Hanson, West Los Angeles, Calif., assignors to Paramount Productions, Inc., Los Angeles, Calif., a corporation of Delaware

Substituted for abandoned application Serial No. 10,840, March 13, 1935. This application May 9, 1936, Serial No. 78,884

14 Claims. (Cl. 271—2.3)

This invention relates generally to developing and drying machines for motion picture film, and may be considered as dealing with improvements in the type of film developing machine generally disclosed and claimed in our prior Patent No. 2,008,439, dated July 16, 1935, entitled "Method of and apparatus for moving film strips through liquid baths". The present application is a continuation-in-part of, and a substitution for, our prior applications entitled "Horizontal type film developing and drying system", filed March 13, 1935, Ser. No. 10,840, and "Film drying machine", filed March 13, 1935, Ser. No. 10,841.

Our prior patent referred to above discloses a developing machine which may be described as of a horizontal type, in which the film is threaded in horizontally elongated convolutions over the film rollers mounted on horizontal shafts at the two ends of the comparatively flat horizontal tank, the lower runs of the film passing under film rollers on a central shaft which is mounted a short distance below the level of the end shafts to give a triangular form to the film path. The rollers at one end of the tank are driven to move the film. The tank bottom slopes downwardly from each end toward the middle, in parallelism with the lower runs of the film. The liquid bath is injected between the lower film runs and the tank bottom with an initial velocity in the direction in which the film moves, and flows initially along with the lower film runs. The liquid then rises and flows backwardly contrary to its original direction, so as to follow the motion of the upper runs of the film convolutions to the opposite end of the tank. This characteristic flow is further aided by continual withdrawal of liquid from the latter end of the tank. One great advantage of this characteristic liquid flow along with the film convolutions is the substantial avoidance of "streaking" or "Mackie line" effects which are commonly encountered in developing motion picture film.

It is the object of the present invention to provide improvements in film moving and controlling mechanism especially adapted to developing machines of the character mentioned.

It is a further object of the invention to provide improvements in film moving and controlling mechanism adapted for use in a film drier.

Having set forth generally the type of machine to which the present invention most particularly appertains, the present invention will now be best understood without further preliminary discussion by referring at once to the following detailed description of a present preferred embodiment thereof, reference for this purpose being had to the accompanying drawings, in which:

Fig. 1 is a side elevation of the film developing and drying machine of the present invention;

Fig. 2 is a section on line 2—2 of Fig. 1 showing speed control means for the machine;

Fig. 3 is a detail section taken on line 3—3 of Fig. 2;

Fig. 4 is a longitudinal section of the first or film developing unit of the machine taken as indicated by line 4—4 of Fig. 5;

Fig. 4*a* is a detail taken as indicated by line 4*a*—4*a* of Fig. 4;

Fig. 5 is a plan view of the unit shown in Fig. 4;

Fig. 6 is a detail section taken on line 6—6 of Fig. 5;

Fig. 6*a* shows a modified form of film driving wheel;

Fig. 7 is a detail section taken on line 7—7 of Fig. 5;

Fig. 8 is a plan view of the last element of the drier unit, the upper wall of said unit being broken away;

Fig. 9 is a section taken on line 9—9 of Fig. 8;

Fig. 10 is a detail section taken on line 10—10 of Fig. 8;

Fig. 11 is a detail section taken on line 11—11 of Fig. 8;

Fig. 12 is a detail section taken as indicated by line 12—12 of Fig. 9;

Fig. 13 is a detail in longitudinal medial section showing a portion of the first drier element;

Fig. 14 is a detail taken as indicated by line 14—14 of Fig. 1;

Fig. 15 is a detail section on line 15—15 of Fig. 4;

Figs. 16 and 17 are views similar to Figs. 4 and 5 but showing a modification.

In Fig. 1 the film F is shown passing from a feed reel 15 first over an elevator unit 16 of usual type, which may be considered simply as a frame with upper and lower rollers around which the film is threaded, and thence through a speed control device 17. The latter may consist of a series of upper film rollers 18 and a series of lower film rollers 19, the film being wound around said rollers and finally being brought off of an upper roller 18 to be led to the first or developer unit 20 of the film treating machine. Said lower rollers are tightly mounted on a drive shaft 21 (Fig. 2) on which is a friction disk 22 engaged on opposite sides by a pair of spring pressed friction disks 23 and 24 splined on a drive shaft 25 which is driven by an electric motor 26. Motor 26 and disks 23 and 24 are mounted on a swinging

arm 27 which is fast on a rock shaft 28 provided with an operating lever arm 29. As will be evident from the figures, the position of lever 29 determines the point of engagement of friction disks 23 and 24 with driven friction disk 22, and therefore determines the speed ratio between motor 26 and film roller shaft 21. Thus the movable arm 29 controls the speed at which the film will be moved by rollers 19 and fed from speed control unit 17 into developer unit 20. Unit 17 may thus be considered as a film hold-back device, designed to feed the film into the developer at any predetermined rate of speed.

The film leaving speed control unit 17 passes in a generally forward direction successively through developer unit 20, rinse tank 30, hypo unit 31, wash unit 32, all of which are arranged in line, thence rises and passes in a generally backward direction through drier 34 mounted directly over the "wet" units, and finally emerges near the film feed devices to be taken up by take-up reel 35.

Referring more particularly to Figs. 4 and 5, it will be seen that developer unit 20 comprises a relatively flat horizontal tank 40 having sides 41, front and rear ends 42 and 43, respectively, and a bottom 44. Bottom 44 comprises bottom portions 44*a* and 44*b* sloping downwardly from ends 43 and 42 towards the middle, for instance as shown in Fig. 4. The tank is shown supported above the floor by under framing 46.

Mounted for rotation on tank side walls 41 adjacent tank ends 42 and 43 are horizontal transverse film roller shafts 48 and 49, respectively, said shafts preferably being in the form of hollow tubes, as indicated in Fig. 7.

The preferred rotatable mounting for the shaft ends is shown in detail in Fig. 7. As there shown, hollow shaft 48 has force fitted within its end a bearing plug 50 carrying a bearing insert element 51 which rotatably receives a spindle member 52 force fitted within a bushing 53 mounted as shown in wall 41.

Rotatably mounted on shafts 48 and 49 are individual independently rotatable film rollers 55. As here shown, these rollers 55, which may be of hard bakelite are mounted on sleeves 56 which are independently rotatable on shaft 48, sleeves 56 being in end to end engagement, as shown, and their inner surfaces being provided with lubricant receiving grooves 56*a*. Rollers 55 are spaced by hard rubber washers 56*b*. The ends of the roller shafts are screwthreaded, as at 48*a*, and screwthreaded on each end of the shaft and positioned adjacent the outer sleeve 56 is a nut 48*b*. This nut 48*b* is not set up against the end of the sleeve so as to interfere with free rotation thereof, but serves, in conjunction with a similar nut at the other end of the shaft, simply to position the sleeves 56 longitudinally on shaft 48 without binding them against free rotation. Screwthreaded on the ends of the roller shafts and set up against positioning nuts 48*b* are hard rubber clamp nuts 48*c*. Preferably, the outside flange of each of the end rollers on the roller shaft is substantially increased in diameter, as indicated at 55*a* in Fig. 7, this provision serving to prevent the film from running off the end rollers.

Mounted in the center of the tank, directly over the angle of the tank bottom, and parallel to shafts 48 and 49, is a third shaft 57, which in the instance here shown is on a level a few inches below shafts 48 and 49, and is journaled on spindles 57*a* mounted in side walls 41 as in the manner indicated in Fig. 6. It will be at once evident from Fig. 6 that the rotatable mounting of shaft 57 in the side walls of the tank is substantially like that described for the end mountings of shafts 48 and 49.

Central shaft 57 has rigidly mounted thereon a large film engaging drum or wheel 58. As shown in Fig. 6, this drum is in the form of end plates 59 rigidly mounted on shaft 57, and a drum cylinder 59*a* mounted at its two ends on outwardly facing annular shoulders 59*b* formed on end plates 59. Preferably, a covering 59*c* is stretched over the drum, being of some material suitable to give a good frictional driving engagement with the film strip passing thereover. This covering may be of a suitable fabric, though we find that a covering of soft rubber vulcanized over the drum possesses many advantages, and such a surface for the drum is preferred.

Fig. 6*a* shows a modified form of film driving drum which is of a "squirrel-cage" type, being made up of a pair of end disks 60 which are non-rotatably mounted on shaft 57, and a plurality of equally spaced and circularly arranged film engaging rods 61 connecting said disks. These rods are formed with a surface such as will give a frictional driving engagement with the surface of the film; for instance the rods may be formed of a composition such as bakelite, although the use of such material of course is not limitative on the invention. The rods being formed into a circle, as indicated, act as a film driving wheel or drum. The drum in this squirrel-cage form allows relatively free circulation of liquid longitudinally of the tank, and may be of advantage in some instances for this reason.

As shown in Fig. 4, the film rollers on shafts 48 and 49 are spaced by a short distance above sloping tank bottom 40, while shaft 57 is so located and the diameter of the drum is such that the lower side of said drum is spaced a substantially similar distance above the point where the two downwardly sloping sections of the tank bottom come together. The upper side of the drum is at an elevation slightly above the upper side of the film rollers on shafts 48 and 49, as indicated.

The film from speed control unit 17 passes downwardly at an angle and loops around an idler roller 65 mounted on one side wall of the tank, between wheel 58 and film roller shaft 48, and is then carried backwardly to and around and up over a film roller 63, which is rotatable on a shaft 64 located between idler roller 65 and the film rollers on end shaft 48. In some instances the film strip may, instead of passing around roller 63, be carried backwardly to and around and up over the end film roller on shaft 48, though the film strip is here shown as omitting to pass over said end roller. Whether the film strip is passed upwardly around film roller 63, or around the end roller on end shaft 48, it is then taken forwardly over the top side of drum 58 to the end film roller on shaft 49 at the other end of the machine, thence around and under said roller, and from there rearwardly and under the lower side of drum 58, thence on to pass under and around the second roller on forward shaft 48, and so on in successive adjacent convolutions to the other side of the machine. As here shown, the film strip after passing the last time over the top side of film driving wheel or drum 58 goes to a film roller 66*a* mounted on a shaft 66*b* and located between film roller shaft 49 and the centrally located film drum 58, thence

passing rearwardly to an idler roller **56** mounted between it and drum **58**, and thence passing upwardly between a pair of squeegee rollers **67** from which it is taken forwardly to rinse tank **30**. It may here be noted that the film should be so arranged that its celluloid side and not its emulsion side comes into contact with the film rollers **55** and driving drum **58**.

The film passes over sets of upper and lower rollers **69** and **70** in rinse tank **30**, and thence passes on to hypo unit **31**. The hypo unit may be substantially similar to the developer unit **20**, with the exception of perhaps being shorter in length since the hypo treatment does not require the film to be emersed for so long a time as is required in the developer.

From hypo unit the film passes between squeegee rollers **71** to the wash unit **32**, which may also be generally similar to developer unit **20**.

From wash unit **32** the film passes between squeegee rollers **72** into drier **34**. This drier will be explained in detail at a later point in the specification, it being sufficient here to note that the drier takes the film continuously from the outgoing end of wash unit **32**, and maintains a slight tension in the film leaving the "wet" section of the machine.

The film strip is moved through the several units **20**, **31** and **32** by yieldable over-drive devices geared to the central film engaging drums **58**, these devices being adapted to be slightly overdriven in order to keep the film strip sufficiently taut to give proper frictional driving engagement between said film driving drums and the film strip. Preferably, air driven turbines, as shown in section in Fig. 6, are used for this purpose.

As illustrated in Fig. 6, the end of shaft **57** on which wheel **58** is mounted carries a gear **80** just inside tank side wall **41**, and meshing with said gear at the top is a drive pinion **81** on the inner end of a shaft **82** journalled in a mounting **83** carried by tank side wall **41**, in the arrangement clearly shown in Fig. 6. On the outer end of shaft **82** is a turbine wheel **84** having usual blades **85**, the wheel being driven by air from a nozzle **86** (see Fig. 4). The turbine wheel is enclosed by a suitable turbine case **87**.

As indicated in Fig. 1, each of units **20**, **31** and **32** is provided with such a turbine drive. Air under suitable pressure is supplied to the several turbines through a header **90** and branch pipes **91** having hand control valves **92**.

As previously noted, the driving surface of film engaging drum **58** preferably supports and lifts the upper sides of the film loops somewhat between the rollers on end shafts **48** and **49**, and depresses the lower sides of the film loops between said rollers to follow an angular path substantially parallel to the two sloping sections **44***a* and **44***b* of the tank bottom. It will be remembered that with a given setting of control lever **29** of film speed control unit **17** the film will be fed into the developer unit at some definite corresponding speed. The film strip threaded through units **20**, **31** and **32** is then tautened and advanced by engagement of the upper and lower sides of the turbine driven drums **58** with the upper and lower sides of the film loops. In the embodiment of the invention shown in Fig. 6*a*, the individual rods of the wheels come successively into engagement with the runs of the film loops, both at the top and at the bottom, and by frictional engagement therewith move the film loops all together in a forward direction through the machine. Preferably, though not necessarily, there are provided an odd number of rods **61** on each wheel, so that when one rod is in full driving engagement with the film, say at the top, the film will be engaged by two of the rods at the bottom, and vice versa. By virtue of this alternation of the film loops are given additional opportunity to equalize tension.

Thus, the central large film driving drum being in driving engagement with a number of film convolutions, the tension exerted in each course of the film is very small, and the final effect is to give a very gentle frictional driving effect at each point of contact between the driving drum and the film strip. Moreover, because of the large radius of curvature of the film driving drum, and because of the fact that the film strip is not wrapped around the rotatable film driving member for 180° of contact, as in prior developing machines, tendency for breakage of the film in the machine is reduced to a minimum. The large drum secures but relatively small frictional grip on the film strip, and if the film strip is held back or stopped at the ingoing end, the drum simply slips on the film and continues to rotate, without unduly straining the film. The machine is also designed to equalize tension between the various film convolutions. It is for this purpose that the film rollers on end shafts **48** and **49** are mounted for free, individual rotation. It will be evident that this individual freedom of rotation of each of said rollers allows the film strip to work in such a way as to equalize the tension throughout all its convolutions. The film strip of course must slip somewhat on the surface of the central driving drum as it is tensed up, or during movement of slack through the machine, but the individual rotatability of each of the film rollers allows the film strip to "work" through the machine in such a way that the film tension is equalized in all convolutions. We find as a matter of practice, however, that one further compensation is desirable to be made in order readily and easily to establish this complete equality of tension in all film loops passing over the drum. The film entering the machine of course tends to elongate as it passes on through the wet bath. This condition may promote a tendency to loosen the film slightly in the convolutions passing over the central portion of the driving drum. Such looseness in the last few convolutions passing over the drum does not occur, due to the take-up tendency of the film driving means beyond. To compensate this tendency, the surface of the driving drum **58** is made slightly divergent from the ingoing side of the tank to a point somewhat past its mid point, and then slightly convergent from there to the outgoing side of the tank. For example, but without intention of limiting the invention, a drum 26.5" in length may diverge from a diameter of 9.75" at its end adjacent the ingoing side of the tank to a diameter of 9.82" at a point two inches past its mid point, and may then taper from this point to a diameter of 9.77" at its end adjacent the outgoing side of the tank. If the surface of the drum is of rubber vulcanized in place, this taper may be provided simply by grinding its surface to the dimensions required. These provisions having been made, the film convolutions therefore maintain a very accurate balance of tension between themselves, and the driving tendency of the central driving drum is held exactly the same on all convolutions.

In Figs. 4, 5 and 15 the film strip is shown as threaded around special film rollers **63** and **66***a* near the ingoing and outgoing ends of the developer tank, the film strip being left off the end

rollers on roller shafts 48 and 49 in each instance. In many instances, said rollers 63 and 66a may be omitted, or disregarded, the film being threaded instead around the corresponding end rollers on shafts 48 and 49. However, when it is desired to increase the drive effect of the central drum 58 on the film, the film is placed around these rollers, which being nearer the drum than the rollers on the end shafts, cause the arc of contact of the corresponding film convolutions with the surface of the central driving drum to be increased, with consequent increased driving effect on those convolutions. In order that the extent of this increase in drive effect may be adjustable, rollers 63 and 66a are mounted so as to be adjustably movable to different positions between center driving drum 58 and the end roller shafts. Thus, as shown in detail in Fig. 15, the shaft 64 of roller 63 is screwthreaded into a mounting assembly 220 slidable on a horizontal rail 221 extending between roller shaft 48 and guide roller 65. This rail 221 is mounted on the outer ends of pins 222 mounted in the side wall 41 of the tank, roller shaft mounting 220 having a horizontal slot 223 passing said pins, as clearly shown in Fig. 15. A thumb screw 224 screwthreaded in the top member 220a of mounting assembly 220 is adapted to be set tightly against the top edge of rail 221 to clamp the roller mounting in adjusted position on the rail.

Figs. 16 and 17 show an alternative film threading arrangement which may be preferred. The machine shown in these figures is in most respect substantially the same as that of Figs. 4 and 5, and corresponding parts of the two forms are identified by like numerals. In this instance, however, the film enters over idler roller 65, as before, but is then carried backwardly and up and around the end roller on shaft 48. The film is then taken forwardly over the top side of drum 58 to an adjustable film roller 63' located between the drum and shaft 49, passing around and under this roller to be taken rearwardly under the lower side of drum 58 to the second roller on end shaft 48. From this point the film goes forwardly over drum 58 to the second roller on forward end shaft 49, and so on in the previous manner to the other side of the tank. The film coming from the underside of the second from the last roller on forward end shaft 49 passes rearwardly under drum 58 and then comes up and around an adjustable roller 66' mounted between the drum and end shaft 48. From there the film goes forwardly over the top side of drum 58 to the end roller on forward shaft 49, and from the lower side of the latter it travels rearwardly to idler roller 56', under and around which it then passes before rising from the tank.

Rollers 63' and 66' are adjustable in position on rails 231 and 232, respectively, similarly to the previously described embodiment, in order to vary the arcs of contact of the two convolutions controlled by said rollers to vary the driving effect of the drum on said convolutions. Rail 231 is preferably so located that the top side of roller 63 is substantially in the plane of the film strands passing from the top side of drum 58 to the film rollers on shaft 49, while rail 232 is preferably so located that the bottom side of roller 63 is substantially in the plane of the film strands passing from the bottom side of drum 58 to the film rollers on shaft 48.

Thus adjustment of the position of rollers 63' and 66' longitudinally on rails 231 and 232 adjusts the arc of contact with the drum of the two film convolutions controlled by said rollers, and in this manner regulates the total drive effect of the drum on the film passing through the unit.

In the particular arrangement here shown the individual film rollers on the two end shafts of the developer are mounted directly opposite one another, rather than being staggered, and the film strip is carried straight forwardly from the top sides of the rollers on shaft 48 to the top sides of the rollers on shaft 49, but runs at a slight angle to the upper film runs in passing from the lower sides of the rollers on shaft 49 to the lower sides of the rollers on shaft 48 (see Fig. 5). It is found that the lower "angular" runs of the film strip tend to work laterally a fraction of an inch on the driving wheel during operation, so that the edge of the film strip rubs against any usual film guide means that might be provided adjacent the driving wheel, such for instance as flanges on the wheel itself, or guide rollers or wire loops mounted adjacent said wheel. Accordingly, we provide a film guide means directly before the driving wheel which is freely shiftable in a lateral direction to accommodate this tendency of the film to work over slightly on the wheel. As shown in Figs. 4 and 4a, there is provided just before the driving wheel a bar 73 having individual film guides in the form of wire loops 74, which are adapted to take and space the successive stretches of the film strip passing under the driving wheel. This bar extends transversely of the tank and its two ends are notched at 75 and slidably mounted on pins 76, as clearly indicated in the figures. It will be evident that the guide bar therefore floats laterally, and accommodates its position to that naturally taken by the film on the driving wheel.

The air supply to each turbine wheel is adjusted by means of its individual control valve 92 in such a manner as to tend to drive the film at a speed just slightly in excess of that permitted by the constant speed film feed device. The turbines are adjusted to give but very slight excess force, so that the film will be sufficiently taut that the film driving drums 58 will not slip on the film, but still will not be unduly strained by the yielding tendency of the air driven turbines to over-drive. Excess slack is prevented from accumulating in the machine when the film becomes wet and elongated by a friction or yieldable over-drive take-out device 100 at the outgoing end of the drier, as hereinafter to be described in more detail, this take-out device moving said slack forwardly through the developer, hypo and wash units, and then through the drier. It is in practice comparatively simple to adjust the turbines to move the film through the several units in succession at constant speed and with the film sufficiently taut that no substantial slippage of the driving wheels on the film occurs, but still without tensing the film strip sufficiently to elongate it permanently.

Figs. 1, 4 and 5 illustrate how the liquid is supplied to and flows through each of the several "wet" units of the machine. A developer solution supply pipe is shown at 110 in Fig. 1, said pipe 110 dividing into branches 111 supplying a set of feeder pipes 112 extending through tank side walls 41 and transversely across the tank bottom. These feeder pipes 112 are provided with jets 113 which are arranged to discharge liquid along the sloping sections of the tank bottom in the direction of movement of the lower runs of the film convolutions. We may also provide, if desired, a set of upper feeder pipes 112a having jets 113a

arranged to discharge liquid above and in the direction of movement of the upper runs of the film. These upper feeders may be supplied by branch pipes 111a leading from pipes 111. The liquid continuously discharges from the tank by flowing over an over-flow edge 120 at the rear end of the tank, said edge being at a level just above the upper runs of the film convolutions. For instance, though without implying any limitation on the invention, the liquid level as determined by over-flow edge 120 may be in the neighborhood of say three-quarters of an inch above the upper side of the film driving wheel 58. The liquid over-flowing said edge 120 is taken within a tank 121 discharging into a pipe 122.

Movement of the film through the machine is accompanied by a characteristic general circulation of the developer liquid toward the forward end of the tank (to the left in Fig. 4) along the tank bottom and toward the rearward end of the tank (to the right in Fig. 4) at the surface, to discharge finally over edge 120. This characteristic circulation is induced first by the liquid being discharged from jets 113 directly along the bottom in the direction of the forward end of the tank, from jets 113a in a reverse direction in the upper portion of the tank, and next by the skin frictional drag on the liquid of the moving strands of film in both the lower and upper runs of the film convolutions. The liquid thus flows in a lower level moving along the bottom with the film and up the upwardly inclined section 44b of the tank bottom to tank end 42, where it rises and turns backwardly on itself to form a surface layer of liquid moving toward the rear end of the tank along with the film strands comprising the upper runs of the film convolutions, the liquid thus moving against its original direction aided by the skin frictional drag of the upper film strands, together with the liquid discharged from jets 113a and the discharge of liquid over the rear end overflow edge 120. There is of course a general tendency for the liquid discharged from lower jets 113 to rise as it flows toward tank end 42, but this is not sufficient to avoid the general and characteristic flow in one direction with the lower film runs and in the opposite direction with the upper film runs. This gradual rise of the developer is of advantage in that fresh developer is thereby constantly brought into contact with the film. It may be noted the squirrel cage type film driving wheel will have some effect in causing a tendency for vertical movement of the developer solution. Thus there is a layer of liquid moving along with the film toward the left in the bottom of the tank, as viewed in Fig. 4, and another layer of liquid at the surface moving with the film toward the right, the liquid rising from the lower layer to the upper layer reversing its direction of flow, and finally overflowing into discharge tank 121.

The hypo unit 31 is similarly provided with a hypo supply pipe 123 provided with branch pipes 124 feeding feeders and injection jets similar to those described in the developer unit, while wash unit 32 is provided with a water supply line pipe 125 having branch pipes 126 supplying feeders which introduce the water to the wash tank.

We proceed now to a description of the drier unit. As shown best in Figs. 1, 8, 9 and 13, drier 34 comprises a long closed conduit 130, preferably rectangular in cross section, mounted immediately above the alined developer, hypo and wash units, as shown. Said conduit is made up of top and bottom walls 131 and 132, respectively, and side walls 133. The side walls may have suitable doors, not shown, for the purpose of gaining access to the interior of the drier. The conduit is supported by means of vertical members 135 mounted on the sides of the developer, hypo and wash tanks, as indicated in Fig. 1.

The film strip coming from between squeegee rollers 72 at the outgoing end of the wet section of the machine passes upwardly at an angle, as shown in Fig. 1, and enters the drier through an aperture 136 in the bottom of the conduit (see Fig. 13). The film leaves the wash tank emulsion side up, and is given a half twist between the wash tank and the drier conduit so that the emulsion side of the film will be "away" from the roller surfaces in the drier. The film upon entering the drier passes upwardly and around end film roller 145 on transverse shaft 140.

The drier is divided into a number of successive film carrying sections, such as A, B, C, and D, a portion of section A being shown in Fig. 13, and section D being shown in greater detail in Figs. 8 and 9. Within each of said sections, which are in general similar to each other, the film strip passes through a set of parallel convolutions which extend longitudinally of the conduit, as shown best in Figs. 8 and 9. The section D of the drier through which the film passes last is shown best in the drawings (Figs. 8 and 9), and will be described in detail as typical of the several sections.

Considering section D, therefore, we show mounted in the side walls 133 of the conduit a pair of longitudinally spaced film roller shafts 140 and 141, and midway between said shafts and preferably on the same level a third shaft 142. Freely and rotatably mounted on the end shafts 140 and 141 of this drier section are individual film rollers 145 (see Fig. 10), and non-rotatably mounted on center shaft 142 is a film driving drum 146, which in the present illustrative embodiment is of a diameter substantially six times that of the film rollers on the end shafts. The diameter of this drum is of course susceptible to considerable variation, the diameter indicated not being limitative on the invention in its broader aspects.

As is shown in Figs. 8 and 11, drum 146 is made up of end plates 148 rigidly mounted on shaft 142, and a drum cylinder 149 mounted at its two ends on annular flanges 150 extending inwardly from plates 148. Preferably, a fabric covering 151 is stretched over the exterior of cylinder 149, and is fastened tightly in place between the ends of the cylinder and the previously mentioned flanges 150, as clearly shown in Fig. 11. This fabric covering is of a nature suitable to give a good frictional driving engagement with the drying film strip.

Drum shaft 142 has on its outer end, outside side wall 133, a wheel 155 which is drivingly engaged on its top side by a friction wheel 156 which is mounted on the end of a spindle 157 journaled in a turbine wheel mounting box 158, the latter being secured to the side of the drier case as indicated in Fig. 11. Friction wheel 156 is preferably formed of cork, which is found to have great durability, as well as to permit slippage should the turbine drive of said wheel be too strong. On the other end of shaft 157 is a gear 160 frictionally engaged by a gear 161 mounted on turbine wheel shaft 162. Shaft 162 has on its outer end an air turbine 163, provided with blades 164. The turbine wheel is driven from air discharged by a nozzle 165 which is positioned to

direct an air current against blades 164, the air current being controlled by a hand valve 167 in supply pipe 168. The turbine wheel is enclosed by a casing 166, as indicated.

The film strip coming from the upper side of the center driving drum of the preceding section of the drier, first engages the top side of the driving drum 146, thence passes downwardly at a small angle to its original direction and loops around the end roller on end shaft 141, from there passes under the lower side of drum 146 and so on back to a roller on shaft 140, looping upwardly around said roller and passing forwardly again over the top side of drum 146, and so on in successive convolutions to the other side of the conduit. Each horizontally arranged film convolution is thus supported top and bottom by the centrally located driving drum. The described arrival of the film at drier section D is illustrative of sections B, C, and D, while it has previously been described how the film reaches the end film roller of first section A (Fig. 13).

It is here to be noted that the film strip must be threaded on the sets of rollers on the several drier sections with its emulsion side out. This is of great importance, first, in that the emulsion is mutilated if the emulsion side of the film is allowed to come into contact with the surface of the rollers, and second, in that it is highly desirable that the emulsion side of the film be on the outer side of the film convolutions where the drying effect of the heated air stream is much the greater.

The drier has a transversely floating film guide similar to that described for the wet units of the machine. As shown in Figs. 9 and 12, a transversely arranged bar 169 is mounted just ahead of film driving drum 146, and is provided with wire loop guides 169*a* which take the angular lower runs of the film convolutions. (It will be noted from Fig. 8 that the upper runs of the film convolutions in the illustrated machine do not have an angular direction, and hence have no tendency to work laterally on the driving drum, therefore not requiring the floating film guide.) The ends of bar 169 are slotted, as at 169*b*, and slide on guide pins 169*c*, as indicated. The film guide accordingly is capable of accommodating itself to the position taken by the film as the film tends to work laterally on the driving drum and thereby avoids rubbing of the film edges on the guide wires.

Preferably, sets of fixed film guide loops 159 and 159*a* are mounted just before the rollers on shafts 140 and 141, respectively.

Polishing rollers, indicated at 181 in Fig. 1, are preferably mounted between the film rollers and central driving drum in drier section A, these rollers, which are covered with chamois or other suitable material, polishing the celluloid surface of the film passing between the film rollers and the center driving drum.

From end drier section D, the film passes between a pair of ejector rollers 170 and 171 (Fig. 9), and passes outside the drier conduit by way of a comparatively narrow slot 172 to be reeled up on takeup reel 35. Roller 170 is constantly driven through the medium of a pulley 174 and belt 175 driven by a pulley 176 which is rotatably mounted on the spindle 177 that supports film roller shaft 141 (Fig. 10). Integral with pulley 176 is a pulley 178 driven by a belt 179 from a pulley 180 fastened to the end of film driving drum 146. The other film ejector roller 171 is pressed into frictional engagement with the film by a spring, as at 182 (Fig. 9). Ejector roller 170 is driven at a speed such as to take the film just as it is supplied from drier section D.

The final film take-out device 100 (Fig. 14) comprises a reel shaft 190 having mounted thereon a wheel 191 driven by a friction wheel 192 which is on a turbine shaft 193. Wheel 192 is preferably of cork, to give a frictional drive which is durable and also which will allow slippage if the turbine shaft is too strongly driven. A turbine wheel 194 having blades 195 is mounted on shaft 193, and is driven by air from a nozzle 196. The air from this nozzle is adjusted by a hand valve 197 to give the turbine just sufficient drive that the reel 35 on shaft 190 will be slightly overdriven, that is, will exert a slight tension on the film coming from the ejector of the drier.

It has been described how the turbines of the wet section of the machine have a slight overdrive tendency, so as to move any slack forwardly through the machine. The drier then takes the film, and the drier turbines are adjusted so that the rotating film driving drums 146, which support and are in frictional engagement with the sets of film convolutions in the drier, also have a slight tendency to over-drive the film through the drier. These various over-drives, of course, are in no instance sufficient to give a permanent elongation to the film, but are only sufficient to take up the slack and maintain a suitable tension in the film. Inasmuch as each driving wheel or drum is in driving engagement with a number of film convolutions, the tension exerted in each course of the film due to this over-drive tendency is very small, and the final result is to give a very gentle driving effect at each point of contact between the driving drum and the film strip. The film ejector at 170, 171 and the final take-out device 100 then remove the film from the drier and reel it up, the take-out device also being adjusted with a slight over-drive tendency so as to draw the film from the drier and prevent slack therein. Thus the over-all tendency of the machine as described is to move slack forwardly through both the wet section and the drier and to take such slack up at the final take-up reel 35. Of course, a large amount of slack which is due to film elongation in the wet section is taken up by natural film shrinkage in the drier, but any excess slack is moved forwardly through the machine and is taken up by final take-out device 100.

The film roller and driving arrangement of the drier is designed with the particular view of equalizing tension between the various film convolutions. It is for this purpose that the film rollers 145 on the end shafts of each drier section are mounted for free, individual rotation. It will be evident that this individual freedom of rotation of each of said rollers allows the film strip to work in such a way as to equalize the tension throughout all its convolutions. The film strip of course must slip somewhat on the surface of the central driving drum as it is tensed up, or during movement of slack through the machine, but the individual rotatability of each of the film rollers allows the film strip to "work" through each of the several sections of the drier with such freedom, even with any such slip on the central drum, that tension in the film always is equalized in the convolutions of each drier section. The film convolutions therefore maintain a very accurate balance of tension between themselves, and the driving tendency of the central driving drum is held exactly the same on all film convolutions.

It has been described how the film is polished by the rollers 181 in the drier. The film is also polished in slipping slightly on the driving drums. It will be evident that such slippage will depend upon the tension placed on the film, which may be controlled by regulating the hold-back on the film at the beginning end of the machine, or by regulating the force exerted by the final take-out device.

A current of heated air is delivered to the film outlet end of the drier conduit through an air inlet conduit 200. This current of heated air passes over the successive sections of the drier comprised by the several sets of longitudinally arranged film convolutions, and is finally discharged through air outlet conduit 201. It will be noted that the air blast is thus in a direction contrary to the direction of film progression through the conduit. Accordingly, the heated air upon introduction to the conduit comes first into contact with that portion of the film which has longest been in the drier conduit and is consequently already substantially dry, and then passes on through the successive sections of the drier wherein the film is in progressively wetter condition. The air of course becomes more and more laden with moisture as it passes from section to section, with the result that its drying effect is lessened as it passes through the conduit. The film in the last section D, however, is always subjected to the influence of the dry incoming air. This arrangement is conducive to most effective and rapid drying of the film.

It is to be noted that the sets of parallel, elongated film convolutions of the drier are arranged longitudinally of the heated-air conduit, or in other words, parallel to the direction of heated air flow. It will also be remembered that the film strip passes over the successive sets of film convolutions emulsion side out. These features of design and arrangement are productive of greatly increased efficiency of drying, as may be appreciated from the considerations following. It is of course well known that it is the emulsion face of the celluloid film strip that requires time for drying, the emulsion being in a very sticky and plastic state when wet, and requiring a much longer time to dry than does the celluloid. In our drier design, the film strip is arranged throughout the sets of elongated convolutions in each of the successive drier sections with its emulsion side out, that is, presented to the heated air stream that is continuously passed through the drier conduit. Within the film convolutions the air is relatively quiet, and drying would be relatively slow and ineffective; however, as has been said, the celluloid dries rapidly, and the inner side of the film strip nevertheless is completely dry before the film leaves the drier. Outside and along the outer sticky surfaces of the longitudinal runs of the film convolutions, the heated air stream flows rapidly along in a continuous stream, "licking" the emulsion surfaces of the film strands and rapidly removing the moisture therefrom as it passes. This air stream is not broken up and caused to flow in various cross and counter directions, but is always substantially parallel to the longitudinal runs of the film in the conduit; moreover, very nearly one hundred per cent of the film within the convolutions of the drier runs in a longitudinal direction, parallel with the air stream and with its emulsion surface presented thereto in the most effective manner for rapid drying. As a result of the features here spoken of, the drying time is reduced very materially below what is usual in prior driers of standard types, and consequently the total film footage required within the drier, and therefore the size of the drier itself, are correspondingly reduced.

We have illustrated our invention in a form in which the film strip is fed into the wet section at constant (predetermined) speed, and is removed from the drier by a slightly over-driven take-out device. It will be understood that the film driving arrangements within the wet and dry sections of the machine are also applicable to the reverse design, in which the film is removed from the drier at constant speed by a constantly driven take-up reel, and is retarded at the ingoing end of the wet section by a friction hold-back device, of conventional type. Since the latter film feed and take-out arrangement is well known to those skilled in the art, it need not here be further described. It should further be understood that while we have for illustrative purposes shown and described one specific embodiment of the broad invention, that invention is not to be limited in its broader aspects to the details of the illustrative embodiment, but only as may fairly be construed from the following claims.

We claim:

1. In a film handling apparatus, the combination of two sets of film rollers mounted on parallel axes and adapted to have a film strip looped and moved therearound in elongated adjacent convolutions, a rotatable film driving drum extending through said film convolutions between said two set of rollers and frictionally engaging the inner surfaces of film strands passing between said sets of film rollers to advance the film, and means for driving said drum.

2. In film handling apparatus, the combination of two sets of film rollers mounted on parallel axes and adapted to have a film strip looped and moved therearound in elongated adjacent convolutions, a rotatable film driving drum of diameter greater than the diameter of the film rollers, said drum extending through said film convolutions between said two sets of rollers and frictionally engaging the inner surfaces of the film strands passing in both directions between said sets of film rollers to advance the film, and means for driving said drum.

3. In film handling apparatus, the combination of two parallel rotatable film roller shafts, a set of film rollers mounted on each of said shafts, said sets of film rollers being arranged to have a film strip looped and moved therearound in elongated adjacent convolutions, a rotatable film driving drum extending through said film convolutions between said sets of rollers and arranged for frictional driving engagement with the film moving in both directions between said sets of rollers, and means for driving said drum.

4. In film handling apparatus, the combination of two parallel rotatable film roller shafts, a set of film rollers mounted on each of said shafts, said sets of film rollers being arranged to have a film strip looped and moved therearound in elongated adjacent convolutions, a rotatable film driving drum of a diameter greater than the diameter of the film rollers, said drum extending through said film convolutions between said sets of rollers and arranged for frictional driving engagement with the film moving in both directions between said sets of rollers, and means for driving said drum.

5. In film handling apparatus, the combination of two parallel film roller shafts, a set of film rollers independently rotatably mounted on each of said shafts, said sets of film rollers being arranged to have a film strip looped and moved therearound in elongated adjacent convolutions, a rotatable film driving drum extending through said film convolutions between said sets of rollers and arranged for frictional driving engagement with the film moving in both directions between said sets of rollers, and means for driving said drum.

6. In film handling apparatus, the combination of two parallel film roller shafts, a set of film rollers independently rotatably mounted on each of said shafts, said sets of film rollers being arranged to have a film strip looped and moved therearound in elongated adjacent convolutions, a rotatable film driving drum of a diameter greater than the diameter of the film rollers, said drum extending through said film convolutions between said sets of rollers and arranged for frictional driving engagement with the film moving in both directions between said sets of rollers, and means for driving said drum.

7. In film handling apparatus, the combination of two parallel rotatable film roller shafts, a set of film rollers individually rotatably mounted on each of said shafts, said sets of film rollers being arranged to have a film strip looped and moved therearound in elongated adjacent convolutions, a rotatable film driving drum extending through said film convolutions between said sets of rollers and arranged for frictional driving engagement with the film moving in both directions between said sets of rollers, and means for driving said drum.

8. In film handling apparatus, the combination of two parallel rotatable film roller shafts, a set of film rollers independently rotatably mounted on each of said shafts, said sets of film rollers being arranged to have a film strip looped and moved therearound in elongated adjacent convolutions, a rotatable film driving drum of diameter greater than the diameter of the film rollers, said drum extending through said film convolutions between said sets of rollers and arranged for frictional driving engagement with the film moving in both directions between said sets of rollers, and means for driving said drum.

9. In film handling apparatus, the combination of a supporting means, sets of film rollers mounted on said supporting means on horizontally spaced parallel horizontal axes, said rollers arranged to have a film strip looped and moved therearound in elongated adjacent convolutions, a rotatable film driving drum of diameter greater than the film rollers extending through said film convolutions substantially midway between said sets of film rollers on an axis parallel to said roller axes, said driving drum arranged for frictional driving engagement with the film moving in both directions between said sets of rollers, and means for driving said drum.

10. In film handling apparatus, the combination of two sets of film rollers mounted on parallel axes and adapted to have a film strip looped and moved therearound in elongated adjacent convolutions, a rotatable film driving drum extending through said film convolutions between said two sets of rollers and frictionally engaging the inner surfaces of the film strands passing in both directions between said sets of film rollers to advance the film, and a film guide device embodying a plurality of loop members adapted to receive and guide the film runs at a position adjacent a side of the rotatable film driving drum, and a single support for said loop members mounted for free floating movement in a direction parallel to the axis of the film driving drum.

11. In film handling apparatus, the combination of two sets of film rollers mounted on parallel axes and adapted to have a film strip looped and moved therearound in elongated adjacent convolutions, a rotatable film driving drum of diameter greater than the diameter of the film rollers, said drum extending through said film convolutions between said two sets of rollers and frictionally engaging the inner surfaces of the film strands passing in both directions between said sets of film rollers to advance the film, and a film guide device embodying a plurality of loop members adapted to receive and guide the film runs at a position adjacent a side of the rotatable film driving drum, and a single support for said loop members mounted for free floating movement in a direction parallel to the axis of the film driving drum.

12. In film handling apparatus, the combination of two sets of film rollers mounted on parallel axes and adapted to have a film strip looped and moved therearound in elongated adjacent convolutions, a rotatable film driving drum of diameter greater than the diameter of the film rollers, said drum extending through said film convolutions between said two sets of rollers and frictionally engaging the inner surfaces of the film strands passing in both directions between said sets of film rollers to advance the film, and a film roller for the loop end of one of the film convolutions adjustable toward and from the film driving drum to regulate the arc of contact of that film convolution with the drum.

13. In film handling apparatus, the combination of two sets of film rollers mounted on parallel axes and adapted to have a film strip looped and moved therearound in elongated adjacent convolutions, a rotatable film driving drum of diameter greater than the diameter of the film rollers, said drum extending through said film convolutions between said two sets of rollers and frictionally engaging the inner surfaces of the film strands passing in both directions between said sets of film rollers to advance the film, and film rollers for the loop ends of two selected film convolutions adjustable toward and from the film driving drum to regulate the arcs of contact of those film convolutions with the drum.

14. In film handling apparatus, the combination of two sets of film rollers mounted on parallel axes and adapted to have a film strip looped and moved therearound in elongated adjacent convolutions, a rotatable film driving drum of diameter greater than the diameter of the film rollers, said drum extending through said film convolutions between said two sets of rollers and frictionally engaging the inner surfaces of the film strands passing in both directions between said sets of film rollers to advance the film, and film rollers for the loop ends of the first and last film convolutions adjustable toward and from the film driving drum to regulate the arcs of contact of those film convolutions with the drum.

HARRIS N. ENSIGN.
HARRY A. HANSON.