Nov. 27, 1951 S. R. JOHNSON 2,576,792

GAUGING MECHANISM FOR SCROLL SHEAR MACHINES

Filed Feb. 7, 1950 4 Sheets-Sheet 1

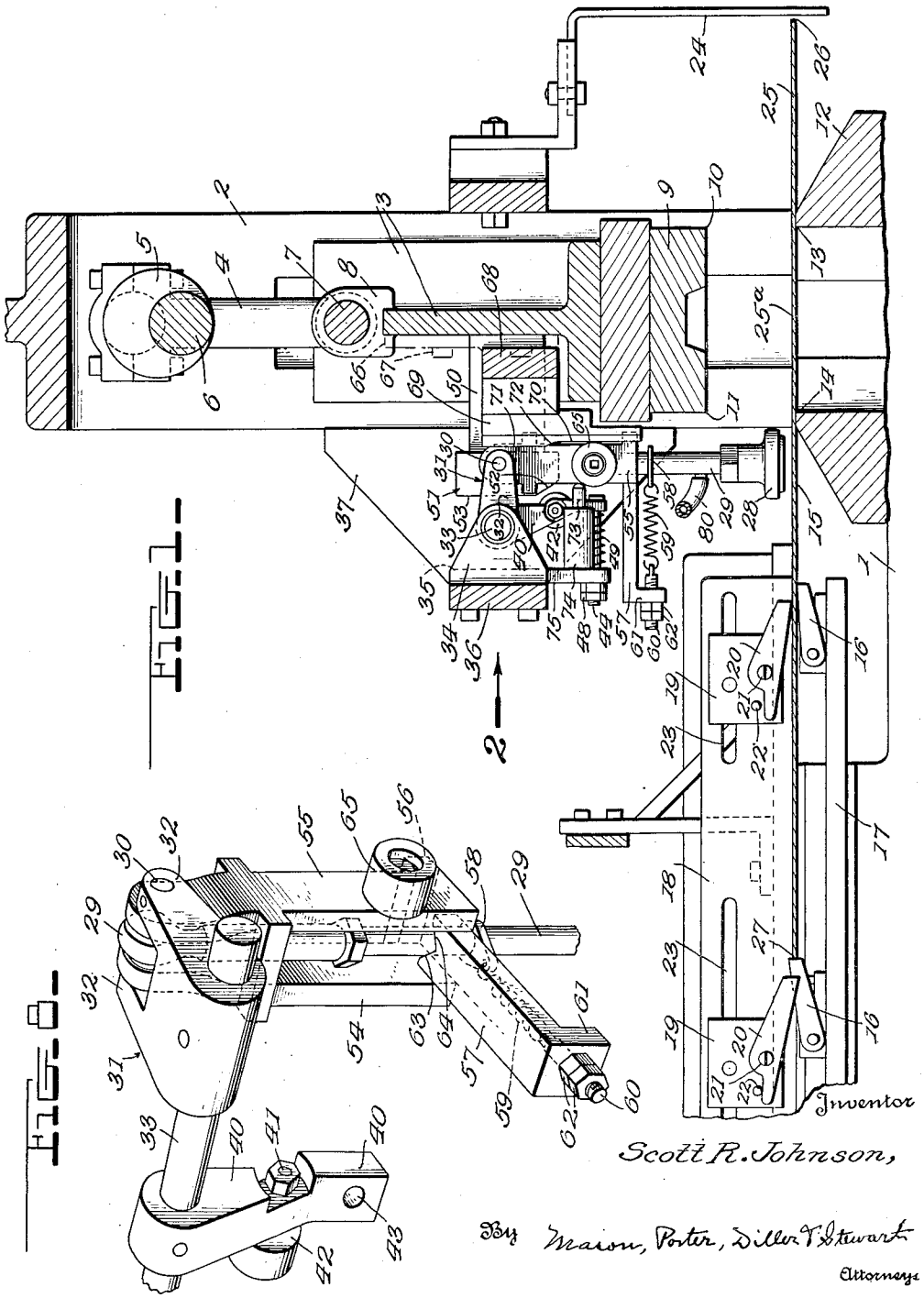

Inventor
Scott R. Johnson,
By Mason, Porter, Diller & Stewart
Attorneys

Nov. 27, 1951 S. R. JOHNSON 2,576,792

GAUGING MECHANISM FOR SCROLL SHEAR MACHINES

Filed Feb. 7, 1950 4 Sheets-Sheet 2

FIG. 2

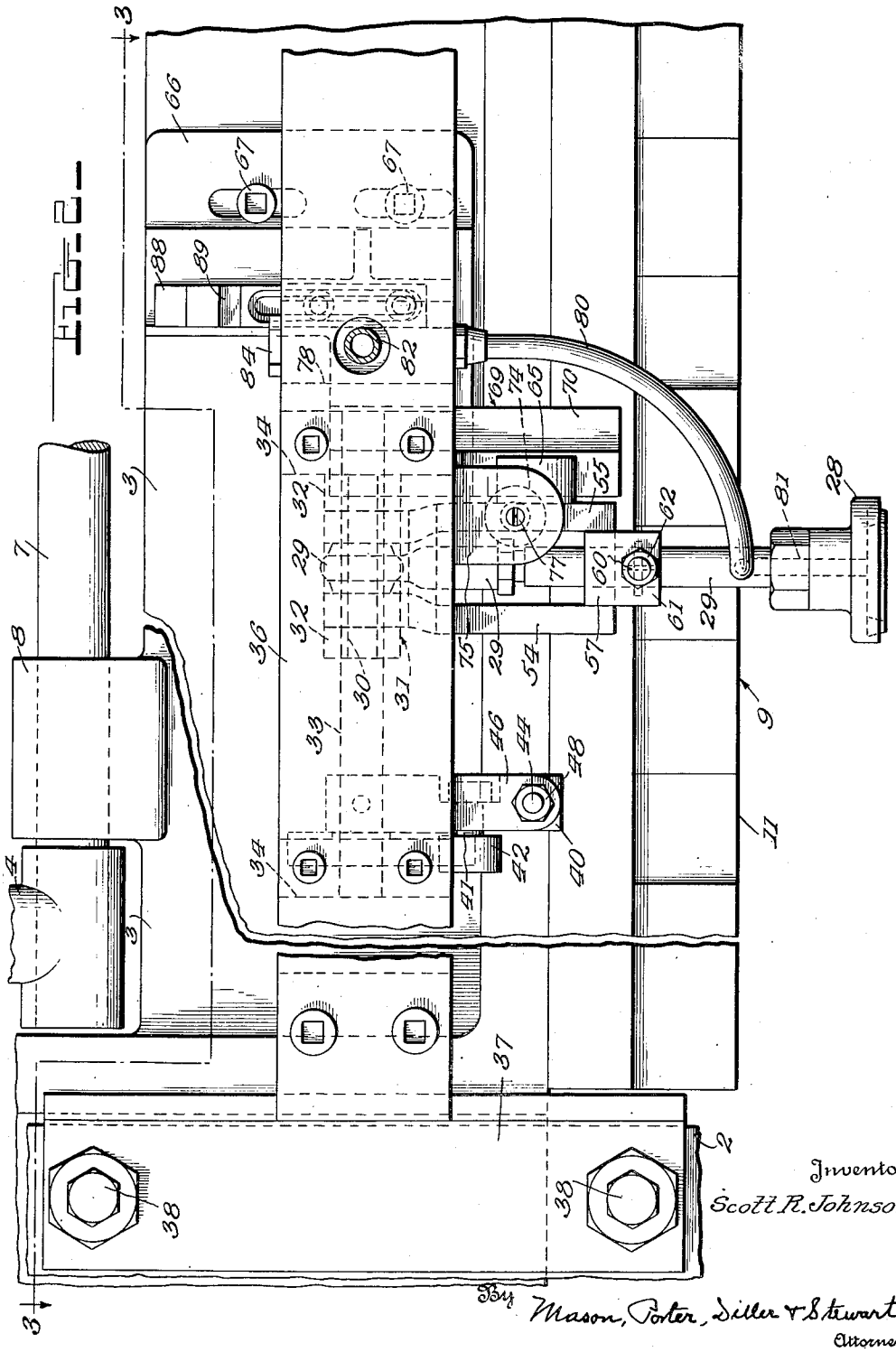

Inventor
Scott R. Johnson,
By Mason, Porter, Diller & Stewart
Attorneys

Nov. 27, 1951 S. R. JOHNSON 2,576,792

GAUGING MECHANISM FOR SCROLL SHEAR MACHINES

Filed Feb. 7, 1950 4 Sheets-Sheet 3

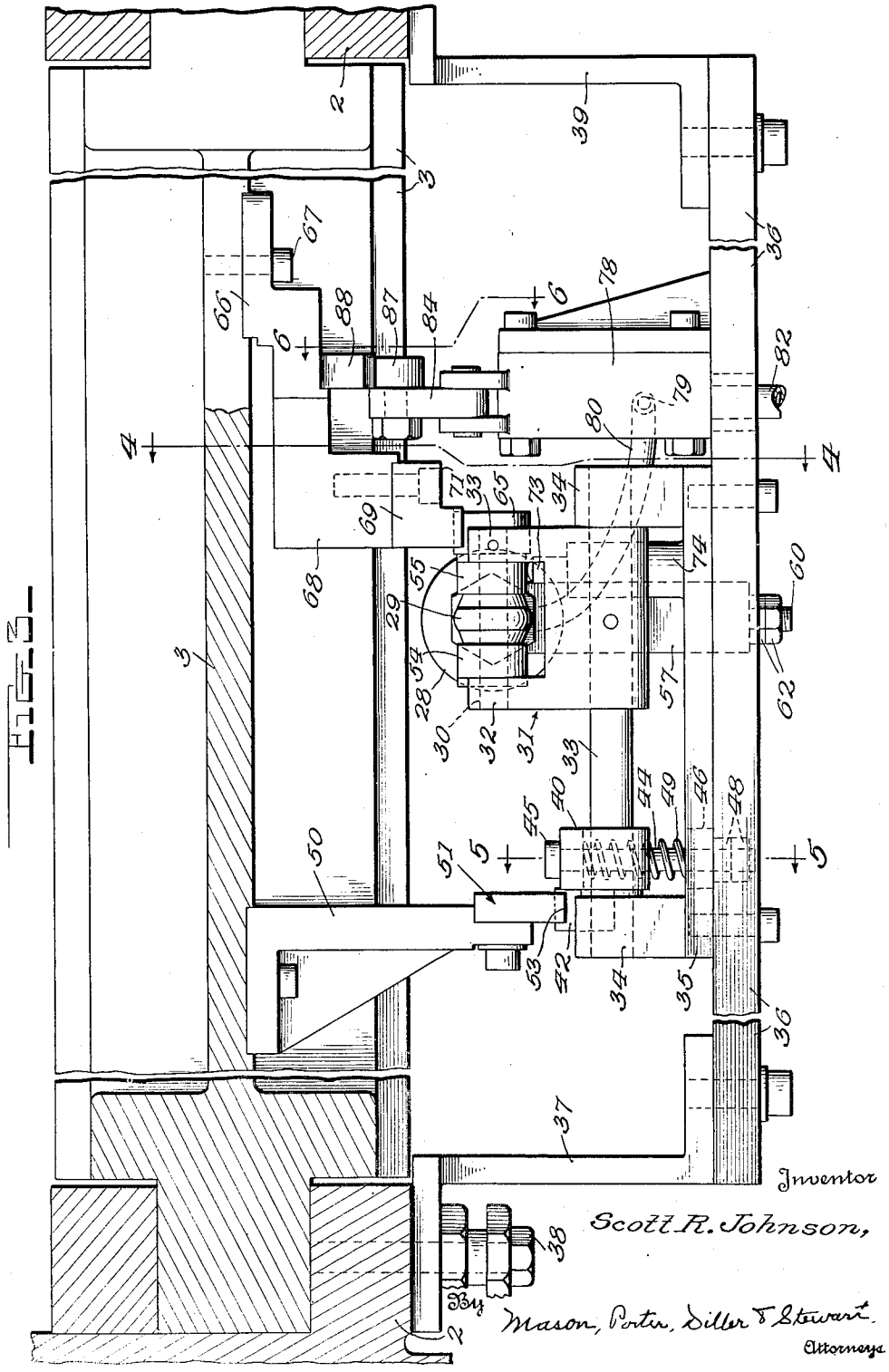

Inventor
Scott R. Johnson,
Mason, Porter, Diller & Stewart.
Attorneys

Nov. 27, 1951 S. R. JOHNSON 2,576,792

GAUGING MECHANISM FOR SCROLL SHEAR MACHINES

Filed Feb. 7, 1950 4 Sheets-Sheet 4

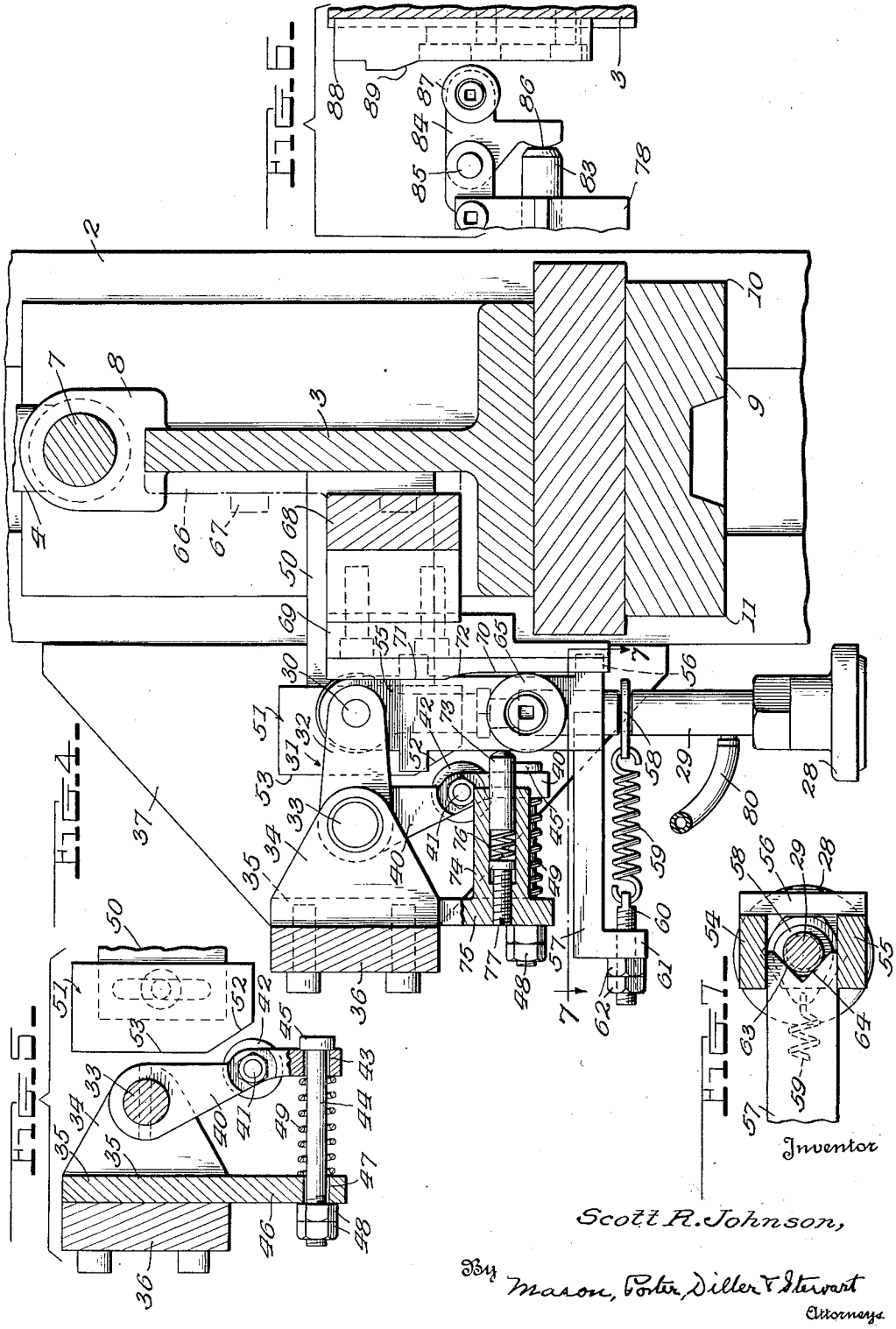

Inventor

Scott R. Johnson,

By Mason, Porter, Diller & Stewart

Attorneys

Patented Nov. 27, 1951 2,576,792

UNITED STATES PATENT OFFICE

2,576,792

GAUGING MECHANISM FOR SCROLL SHEAR MACHINES

Scott R. Johnson, River Forest, Ill., assignor to Continental Can Company, Inc., New York, N. Y., a corporation of New York

Application February 7, 1950, Serial No. 142,882

5 Claims. (Cl. 164—48)

1

The invention relates to new and useful improvements in a sheet positioning mechanism for a scroll shear machine of the type shown in the patent granted C. D. McDonald, January 25, 1916, No. 1,169,332.

In said patent the sheet is fed between the scroll shears by reciprocating feed dogs which move the sheet slightly beyond a correct position for cutting and the sheet is returned, when the feed dogs are retracted, to a cutting position by spring actuated fingers which move the trailing edge of the sheet into engagement with back gauges.

An object of the invention is to provide a machine of the above type with a sheet gauging mechanism actuated by the reciprocating crosshead carrying the movable shearing devices for moving the trailing edge of the sheet into contact with gauging devices for accurately and positively locating the sheet in the proper position for cutting.

A further object of the invention is to provide a sheet positioning mechanism of the above type wherein a suction cup grips the sheet and moves the same into contact with the gauging devices and holds the sheet against the gauging devices during the cutting of the sheet.

Another object is to provide an automatic sheet gauge for a shear machine in which a sheet engaging element can follow a multi-directional movement for placing a sheet in the proper position for the shearing operation.

A further object is to provide a novel sheet gauging mechanism on a shear machine in which the sheet moving element may yieldingly resist continued movement when the sheet is disposed in the gauged position.

A still further object of the invention is to provide a sheet positioning mechanism of the above type wherein cams carried by the cross head control the movements of the suction cup.

Other objects will in part be obvious and will in part be hereinafter more fully disclosed.

In the drawings which show by way of illustration one embodiment of the invention:

Figure 1 is a vertical sectional view through a machine for cutting scroll strips with the improved sheet positioning mechanism applied thereto;

Figure 2 is a view on an enlarged scale showing a portion of the gauging mechanism and the supports therefor as viewed by the arrow numbered 2 in Figure 1;

Figure 3 is a sectional view on the line 3—3 of Figure 2;

2

Figure 4 is a sectional view on the line 4—4 of Figure 3;

Figure 5 is a sectional view on the line 5—5 of Figure 3;

Figure 6 is a sectional view on the line 6—6 of Figure 3 and showing the valve operating mechanism for controlling the vacuum on the cup;

Figure 7 is a view on the line 7—7 of Figure 4, and

Figure 8 is a view in perspective of the devices for raising and lowering the suction cup and the devices for moving the cup back and forth laterally.

The scroll shear cutting machine includes the main frame 1 carrying standards which project upwardly therefrom at each side of the machine. One of the standards is indicated at 2 in Figure 1 of the drawings. Mounted for reciprocation in the standards is a crosshead 3. This crosshead is reciprocated by links 4 cooperating with eccentrics 5 mounted on the actuating shaft 6 which is journaled in the standards. The links are pivotally connected to a shaft 7 mounted in bearings 8 carried by the crosshead. Mounted on this crosshead is a shearing die 9 having a cutting edge 10 at the front side thereof and a cutting edge 11 at the rear side thereof. Mounted on the main frame is what might be called the female shearing die 12. This shearing die has a cutting edge 13 at the front side thereof with which the cutting edge 10 cooperates and a cutting edge 14 at the rear side thereof with which the cutting edge 11 cooperates. These shearing dies are shaped so as to cut a scroll strip having a scroll edge at each side thereof. These scroll strips and the method of shaping the dies to produce the same are very well known in the art and further description is not thought necessary. It may be stated that, as illustrated, both the front and rear edges of the strip are simultaneously cut. In many of the machines there is a single pair of shearing devices which cut one side and then the other of a scroll strip.

A sheet of metal from which a scroll strip is being formed is indicated at 15 in the drawings. There is a supporting table for the sheet and the sheet is fed in a plane just above the upper end of the female die. The sheet is fed by feed dogs 16, 16 carried by a reciprocating feed bar 17. These feed dogs are yieldingly pressed upwardly in the usual manner and engage the trailing edge of the sheet one after another for advancing it between the scroll shears.

Mounted on the supporting table for the sheet are upstanding brackets which support bars 18

which are disposed above the sheet with sufficient clearance to allow the sheet to pass beneath the bars. These bars are provided with shiftable block 19, 19, each of which carries a gauge 20. The gauge is pivoted at 21 and is adapted to rest on top of the sheet as shown at the right in Figure 1 when the sheet is beneath the gauge.

When, however, the sheet passes from beneath the gauge then the gauge will swing on the pivot until the rear edge thereof engages a stop 22. These blocks are secured to the bar by bolts passing through slots 23 so that the blocks may be shifted to set the machine for operation on different widths of scroll strips.

The feeding mechanism and gauging devices are of the general type shown in the McDonald patent supra, and further detailed description thereof is not thought necessary. The feed dogs are given a forward movement to carry the sheet between the scroll shears and then are retracted for engagement with the sheet for again moving it forward for the cutting of the next scroll strip. On their forward movement the sheet is moved slightly beyond accurate position for cutting.

There are depending rods 24 which prevent the sheet from excessive overrun. In the normal operation of the feed dogs the sheet is carried to a position near but not in contact with the rods. When the sheet is cut by the cooperation of the cutting edges 10 and 13 a scroll strip 25 is formed as the edge 26 thereof was previously cut by the scroll shears. Simultaneously with the forming of the scroll strip 25 the cutting edges 11 and 14 will sever the sheet so as to produce a scroll strip 25a. This simultaneously forming of two scroll strips is also disclosed in the McDonald patent supra.

The present invention has to do particularly with the mechanism for moving the sheet rearwardly when the feed dogs are retracted so as to place the trailing edge 27 of the sheet in engagement with the gauges 20, 20, two of which are shown in Figure 1 of the drawings. These gauges 20, when the sheet moves from beneath the same, drop to the position shown at the left in Figure 1 and, therefore, the trailing edge will contact therewith when the sheet is moved rearwardly.

The mechanism for moving the sheet rearwardly into contact with these gauges includes a suction cup 28 which moves downward into engagement with the sheet after which the suction cup is put under vacuum so that the sheet is gripped by the cup. After the suction cup is thus attached to the sheet it is moved rearwardly and positively carries the trailing edge of the sheet into contact with the gauges 20, 20. The suction cup is disposed midway between the standards 2, 2 and is connected to a rod 29 which extends upwardly and is freely pivoted on a shaft 30 carried by a yoke 31. This yoke 31, as shown in perspective in Figure 8, has forwardly projecting arms 32, 32 and the shaft 30 is mounted in the outer ends of these arms.

The yoke 31 is fixed to a shaft 33 and this shaft is oscillated so as to swing the yoke and thus raise the rod 29 which carries the suction cup and is pivotally mounted on the shaft 30. The shaft 33 is mounted for free oscillation in brackets 34 carried by a plate 35 which is bolted to a bar 36 extending across the machine from one standard to the other. The bar is bolted at one end to a member 37 secured to one of the standards 2 by bolts 38. At its other end it is

secured to a member 39 which is likewise carried by the standard at the other side of the machine.

The shaft 33 carrying the yoke 31 is provided with a depending arm 40 which is rigidly attached to the shaft 33. This depending arm 40 carries the stud 41 on which a roller 42 is mounted. There is an opening 43 through the lower portion of this depending arm 40 and a bolt 44 extends through the opening.

The bolt has a head 45 which contacts with the lower end of the arm 40. The plate 35 has a depending portion 46. The bolt 44 extends through an opening 47 in this depending portion 46. Nuts 48 are threaded onto the outer end of the bolt. A spring 49 surrounds the bolt and bears against the depending portion 46 as an abutment and also against the outer face of the depending arm 40. The spring tends to turn the depending arm 40 and the shaft 33 in a counterclockwise direction. This movement of the shaft 33 will raise the suction cup.

Mounted on a bracket 50 carried by the crosshead 3 is a cam plate 51 provided with a camming surface 52 which leads into a surface 53 that is parallel with the up and down movement of the crosshead. When the crosshead moves downward the inclined camming surface 52 will engage the roller 42 and will swing the arm 40 and the shaft 33 in a clockwise direction. This will lower the suction cup into contact with the sheet. The cam plate is adjusted vertically so that as soon as the cup is firmly contacted with the sheet the roller will move off over the inclined surface onto the plain vertical surface 53. This will hold the cup in contact with the sheet.

When the cup is put under suction, it will firmly grip the sheet. When the crosshead moves upwardly it carries the cam plate 51 with it and this will move the cam plate from contact with the roller 42 as shown in Figures 4 and 5. The spring 49, as soon as the roller is released, will swing the arm 40 so as to raise the suction cup. The extent to which the suction cup is raised is determined by the head 45 of the bolt 44.

Also mounted on the shaft 30 for free swinging movement are depending members 54 and 55. These depending members are spaced from each other but are connected by a plate 56 at the lower ends thereof. The members are also connected by and support a laterally projecting bracket 57. Mounted on the rod 29, carrying the suction cup, is a collar 58. A spring 59 is attached to this collar at its inner end and at its outer end it is attached to an adjustable stud 60. This stud is threaded into the depending portion 61 of the bracket 57 and is held in adjusted positions by nuts 62. The inner end of the bracket 57 is shaped so as to provide surfaces 63 and 64 which are at right angles to each other and the spring is so tensioned as to draw the bar 29 into engagement with these surfaces 63 and 64. See Figure 7.

The depending member 55 carries a roller 65. A bracket 66 is secured to the crosshead by bolts 67. The bracket 66 is provided with an extension 68 and a cam plate 69 is bolted thereto so that it may be adjusted vertically on the extension. This cam plate has a face 70 at the lower portion thereof which is parallel with the up and down movements of the crosshead. It also has a face 71 which is likewise parallel with the movements of the crosshead. There is an inclined face 72 which joins these two faces 70 and 71. The roller 65 contacts with these faces. When the crosshead is in raised position then the roller 65 will con-

tact with the face 70 and when the cross-head is lowered then the roller 65 will come into contact with the face 71. These two faces are disposed relative to each other so as to give a lateral movement to the depending members 55 and 54. Inasmuch as the rod 29 is spring pressed against the bracket 57 as shown in Figure 7, when the roller 65 moves onto the face 71, it will move the rod 29 to the left as viewed in Figure 1. This movement takes place when the suction cup is in contact with the sheet and moves the sheet rearwardly until it contacts with one of the gauges 20. The gauges 20 are arranged in pairs disposed on spaced positions. When the sheet contacts one of the paired gauges, continuation of the swing movement of the depending members 54, 55 will move the bracket 57 away from the rod 29, whereupon the suction cup can then swing the sheet laterally about the contacted gauge as a pivot until the rear edge of the sheet engages the other one of the paired gauges. Any distance that the sheet has to travel in successively contacting the paired gauges 20 is actually very little and the lateral movement of the rod 29 is, of course, proportionately small. Probably the sheet will, as often as not, contact both paired gauges simultaneously, but if not, the arrangement makes certain that the rear edge of the sheet is in contact with both gauges 20 before the sheet is cut. The outward or backward swing stroke of the suction cup is a positive movement until the sheet is brought into contact with the gauges 20 and the sheet will be held by the suction cup in contact with the gauges so long as the roller 65 is in contact with the face 71.

The timing of the cams is such that after the sheet has moved to its fully advanced position by the feed dogs, the crosshead will begin its downward movement for a cutting operation. However, the shearing die 9 is a sufficient distance above the sheet so that the cams come into play for moving the suction cup into contact with the sheet and positively shift the sheet rearwardly to bring the trailing edge into contact with the gauges before the sheet is cut. The feed dogs are retracted so that the suction cup can move the sheet rearwardly into contact with the gauges.

The cams for moving the suction cup are so timed that after the sheet is placed against the gauges, further downward movement of the crosshead does not affect the position that the suction cup has assumed during the placing of the sheet against the gauges. On the upward movement of the crosshead the spring 49 raises the suction cup from the sheet and the roller 65 will move onto the face 70 of the cam plate 69 and a spring pressed plunger 73 bearing on the member 55 will force the section cup to the position shown in Figure 1. This spring pressed plunger 73 is shown in detail in Figure 4. The plunger is carried by a sleeve 74 formed as an integral part of the depending portion 75 carried by the plate 35. There is a spring 76 in the sleeve which moves the plunger into contact with the depending member 55. This spring bears against an adjustable abutment bolt 77.

Referring in particular to Figure 3, there is a valve housing 78 carried by the bar 36. The valve housing contains a port 79 which is connected by a flexible tube 80 to the rod 29 carrying the suction cup and there is a port 81 in the rod 29 leading to the suction cup which is of the usual type. There is a port in the housing 78 which is connected to a pipe 82 which in turn is

connected with a suitable suction creating means. Between the port 79 and the one to which the pipe 82 is connected is a valve chamber of the usual construction. The valve includes an operating stem 83.

A rocker arm 84 is pivoted at 85 to lugs carried by the valve housing. This rocker arm has a rounded face 86 which is pressed against the stem 83. There is a roller 87 carried by this rocker arm 84. This construction is shown in detail in Figure 6.

Mounted on the bracket 66 is a cam plate 88 which may be adjusted by a suitable slot and bolt connection. The bracket 66 is mounted on the crosshead so that this cam plate moves up and down with the crosshead. There is a cam face 89 which contacts the roller 87 on the downward movement of the crosshead and this will swing the rocker arm so as to open the valve and connect the vacuum cup with the suction creating means. When the crosshead moves upward the roller 87 will be released so that the valve may automatically close. This cam is timed so that the suction cup after it is pressed against the sheet will be connected with the source of suction and on the upward movement of the crosshead the valve will be closed and the suction cup released from the sheet.

It is thought that the operation of the machine will be understood from the detailed description which has been given above. Briefly, it may be stated that the sheet is advanced between the scroll shears by the reciprocating feed dogs and the sheet is carried to a point slightly beyond the correct position for cutting, then the feed dogs are retracted.

As the crosshead moves down for a cutting operation, the control cams carried thereby operate to move the suction cup into engagement with the sheet and then shift the suction cup rearwardly until the trailing edge of the sheet is brought into contact with the gauges 20, 20. The control cam for the valve is timed so that when the suction cup engages the sheet it will be put under vacuum and fixedly attached thereto.

The rearward movement of the suction cup is a positive movement until the sheet is in contact with the gauges. This all takes place before the upper scroll shears reach the sheet for the cutting operation. Inasmuch as the trailing edge of the sheet is used to gauge the sheet for cutting, the sheet will be very accurately placed and held placed by the suction cup. After the cutting operation then the control cams move up with the crosshead, cutting off the suction from the cup and raising the cup and returning it to its initial position for the next gauging operation.

It is obvious that many changes in the details of construction can be made without departing from the spirit of the invention as set forth in the appended claims.

I claim:

1. A scroll shear machine comprising cooperating shearing devices, a reciprocating crosshead carrying one of said shearing devices, reciprocating feed dogs for feeding the sheet between the shearing devices to a position slightly beyond correct position for cutting, gauges adapted to accurately position the sheet by contact with the trailing edge thereof, and cams carried by the crosshead and devices actuated thereby for engaging the sheet and moving the same so as to place the trailing edge of the sheet against the gauges and for holding the sheet against said gauges during cutting.

2. A scroll shear machine comprising cooperating shearing devices, a reciprocating crosshead carrying one of said shearing devices, reciprocating feed dogs for feeding the sheet between the shearing devices to a position slightly beyond correct position for cutting, gauges adapted to accurately position the sheet by contact with the trailing edge thereof, a suction cup, means operated by the crosshead for moving said suction cup into and out of contact with the sheet, means for placing said cup under vacuum for fixing the same to the sheet, and means actuated by the crosshead for moving the suction cup and sheet so as to place the trailing edge of the sheet against the gauges.

3. A scroll shear machine comprising cooperating shearing devices, a reciprocating crosshead carrying one of said shearing devices, reciprocating feed dogs for feeding the sheet between the shearing devices to a position slightly beyond correct position for cutting gauges adapted to accurately position the sheet by contact with the trailing edge thereof, a suction cup, a rod supporting said suction cup, a cam carried by the crosshead and devices operated thereby for lowering and raising the rod for moving the suction cup into and out of contact with the sheet, a second cam carried by said crosshead and devices operated thereby for moving the suction cup laterally for carrying the trailing edge of the sheet into contact with said gauges, a third cam carried by said crosshead and devices operated thereby for controlling a vacuum on the suction cup.

4. A scroll shear machine comprising cooperating shearing devices, a reciprocating crosshead carrying one of said shearing devices, reciprocating feed dogs for feeding the sheet between the shearing devices to a position slightly beyond correct position for cutting, gauges adapted to accurately position the sheet by contact with the railing edge hereof, a suction cup, a rod carrying said suction cup, a yoke member pivotally supporting said rod for vertical movement, a cam carried by the crosshead and adapted to oscillate said yoke so as to move the suction cup into contact with the sheet during the first part of the downward movement of the crosshead, means for placing said cup under vacuum for attaching the same to the sheet, and means operated by the crosshead for moving the suction cup laterally to carry the trailing edge of the sheet into contact with said gauges.

5. A scroll shear machine comprising cooperating shearing devices, a reciprocating crosshead carrying one of said shearing devices, reciprocating feed dogs for feeding the sheet between the shearing devices to a position slightly beyond correct position for cutting, gauges adapted to accurately position the sheet by contact with the trailing edge thereof, a suction cup, a rod carrying said suction cup, a yoke member pivotally supporting said rod for vertical movement, a cam carried by the crosshead and adapted to oscillate said yoke so as to move the suction cup into contact with the sheet during the first part of the downward movement of the crosshead, means for placing said cup under vacuum for attaching the same to the sheet, a second cam carried by said crosshead, members pivotally carried by said yoke, devices whereby said members are oscillated by said second cam, yieldable means for connecting said oscillating members to said rod for moving the suction cup so as to carry the trailing edge of the sheet into contact with said gauges, said second cam being timed so that the sheet will be placed in contact with the gauges by the downward movement of the crosshead and prior to the cutting of the sheet.

SCOTT R. JOHNSON.

REFERENCES CITED

The following references are of record in the file of this patent:

UNITED STATES PATENTS

Number	Name	Date
1,955,671	Coyle	Apr. 17, 1934