Nov. 24, 1959 R. L. SINCLAIR 2,913,906

VEHICLE PARKING CONTROL MEANS

Filed July 8, 1957 2 Sheets-Sheet 1

FIG. 1.

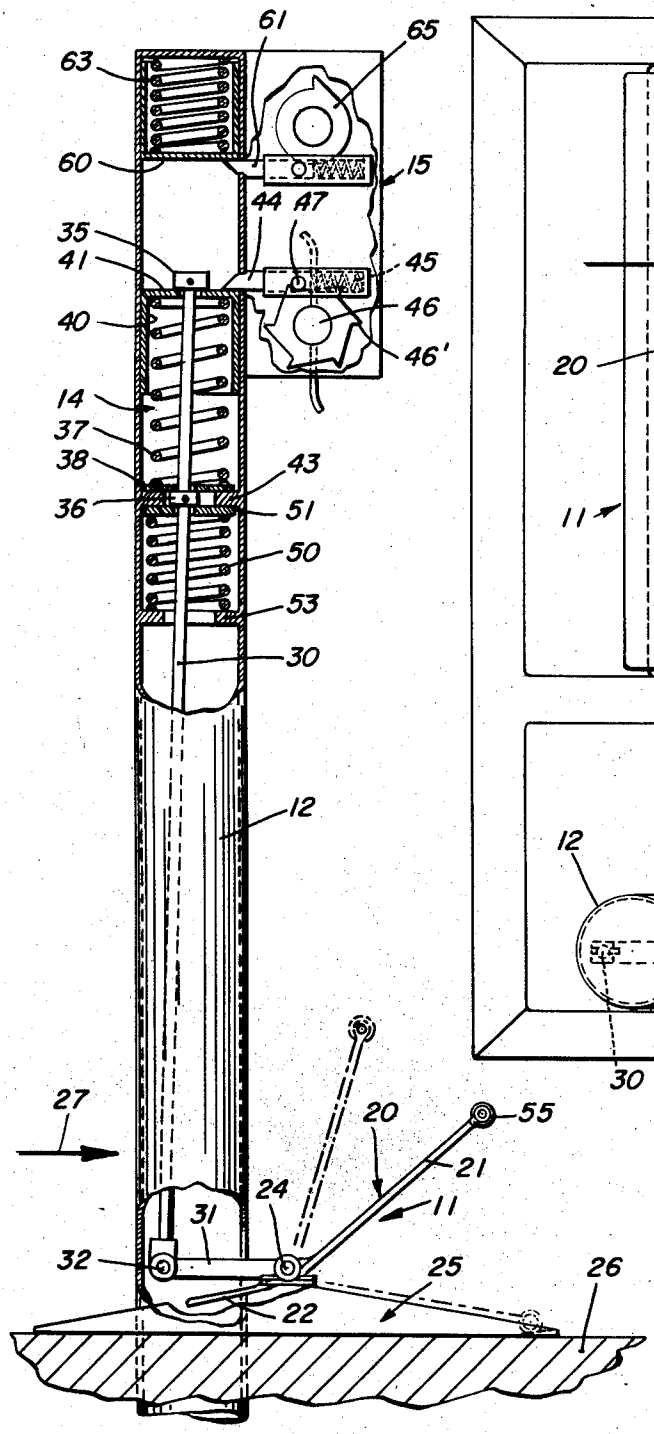

FIG. 2.

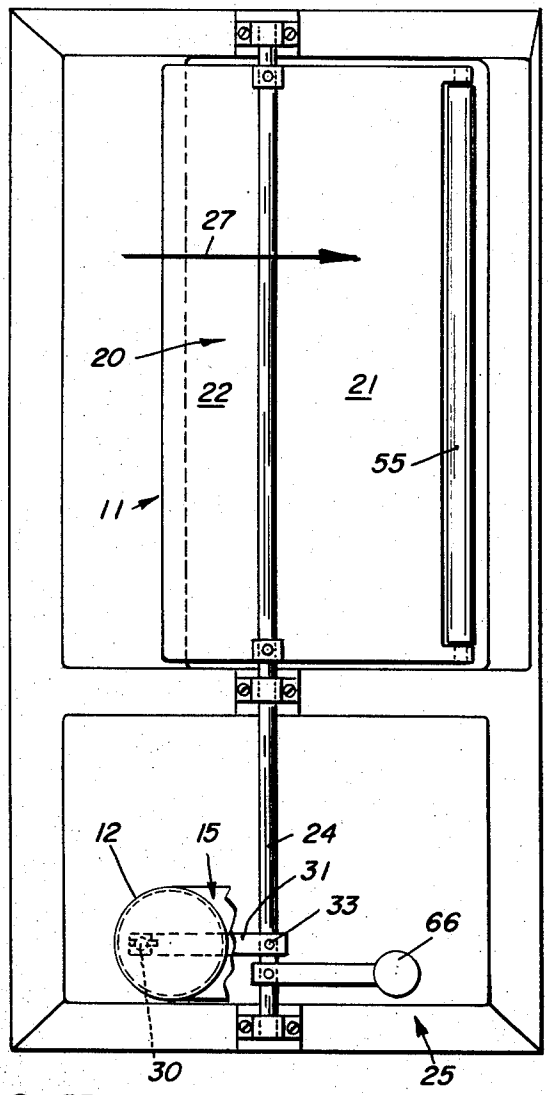

INVENTOR
RICHARD L. SINCLAIR
BY
Mason & Graham
ATTORNEYS

Nov. 24, 1959 R. L. SINCLAIR 2,913,906

VEHICLE PARKING CONTROL MEANS

Filed July 8, 1957 2 Sheets-Sheet 2

FIG. 3. FIG. 4. FIG. 5. FIG. 6.

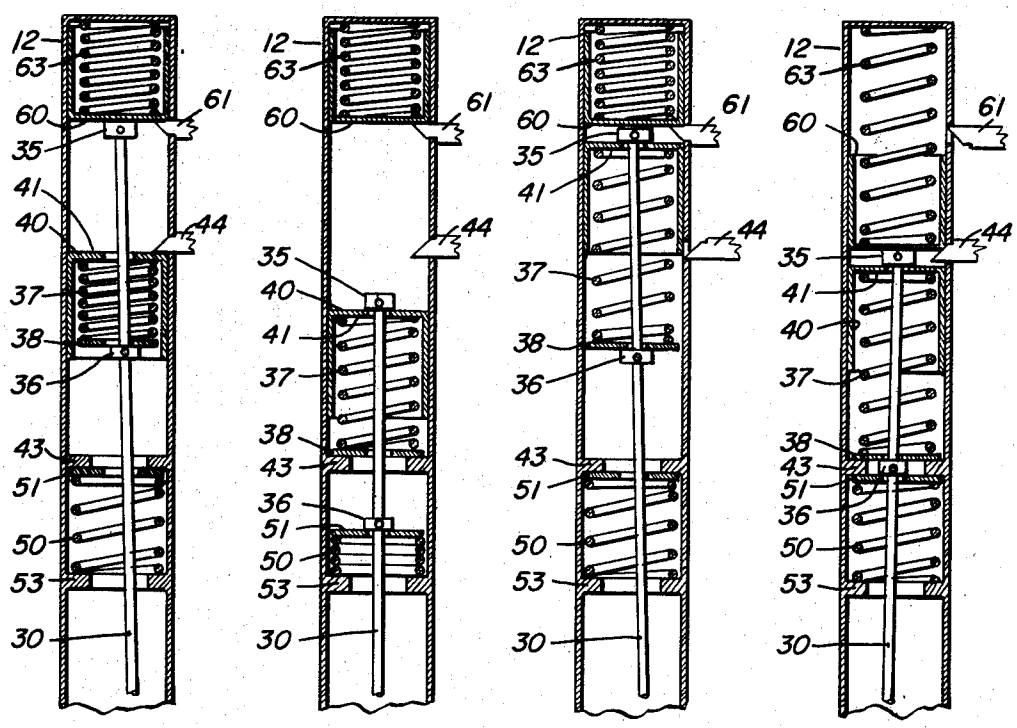

INVENTOR

RICHARD L. SINCLAIR

BY

Mason & Graham

ATTORNEYS

United States Patent Office 2,913,906
Patented Nov. 24, 1959

2,913,906

VEHICLE PARKING CONTROL MEANS

Richard L. Sinclair, Garden Grove, Calif.

Application July 8, 1957, Serial No. 670,565

9 Claims. (Cl. 74—2)

This invention has to do with devices for controlling the parking of automobiles and similar motor vehicles in parking stalls, the invention having to do particularly with coin-operated devices of the type designed to prevent the removal of the vehicle from the parking stall until the proper amount of money has been deposited in the meter.

It is a particular object of the invention to provide a device for controlling the parking of vehicles for use with single-ended parking stalls where the vehicle must enter and leave the same end of the stall, that is, if it is driven in forwardly, it must be backed out, and vice versa.

Another object is to provide a device which is automatically set or actuated by the vehicle passing over a portion of the device located at the vehicle-supporting surface and to provide a device which automatically sets up a barrier or obstruction to prevent the removal of the vehicle until the proper amount of money has been deposited in the meter.

More particularly it is an object to provide a pivotally mounted plate at the vehicle-supporting surface or ground level which is of a dual nature and includes a reset section and a barrier section and which is movable to three positions, together with means controlling the plate.

A further object is to provide automatic reset means adapted to be driven by a clock mechanism or the like to prevent a person from prematurely releasing the device for a minimum parking charge and subsequently removing the vehicle after the minimum parking time has expired without payment of further money.

Still another object is to provide a simple, rugged, easily constructed device which is economical to manufacture and can be readily installed and serviced.

These and other objects will be apparent from the drawings and the following description. Referring to the drawings:

Fig. 1 is a sectional elevational view, partly diagrammatic, of apparatus embodying the invention;

Fig. 2 is a plan view, partly broken away;

Figs. 3, 4, 5, and 6 are sectional views of the upper portion of the apparatus shown in Fig. 1, but showing the parts in different positions.

More particularly describing the invention, reference numeral **11** generally indicates a dual plate mechanism which is installed substantially at ground level or at the vehicle-supporting surface in position to be traversed by at least one wheel and preferably two wheels of the vehicle. **12** designates a hollow post or column which contains control mechanism, designated **14**, and which supports a coin-controlled meter mechanism **15**, shown diagrammatically.

The means **11** includes a plate, designed **20**, which consists of two angularly disposed sections, namely, a barrier section **21**, and a reset section **22**. These are disposed in planes which form an obtuse angle. Plate **20** is pivotally mounted substantially at the intersection

of the two plate sections upon a pivotally mounted shaft **24**. This is supported in a frame **25** of suitable type mounted upon the ground or vehicle-supporting surface **26**.

As will later appear, the vehicle enters the parking stall or area and traverses the plate **20** in a direction laterally or across the plate, the vehicle moving initially in the direction indicated by arrow **27** in Figs. 1 and 2. In doing so, the barrier section **21** is depressed to the lower broken-line position but returns to its normal, full-line position, and, as will later appear, is held there resiliently to prevent the vehicle moving backward out of the parking stall.

The shaft **24**, which is rigidly secured to the plate, is connected to an operating rod **30** within the column **12** by means of a lever **31** which is pivotally secured at **32** to the rod and rigidly secured at **33** to the shaft.

Rod **30** is provided with a pair of axially spaced collars, designated **35** and **36**. A coil compression spring **37** is provided between the collars about the rod and one end abuts a disk **38** adjacent collar **36**, while the other end is received within a cylinder **40** which has an apertured end wall **41** so that the cylinder slidably receives the rod.

Column **12** is provided with an inwardly extending flange **43** which supports the disk **38** and hence spring **37**.

With the parts in normal position, such as shown by the full lines in Fig. 1, the cylinder and spring are retained in the position shown by latch means which may consist of a latch finger **44** projecting over the top of the cylinder. A spring **45** yieldably urges the latch finger to this position. The latch finger is retracted manually by operating knob **46** having teeth **46'** which engage a pin **47** on the latch finger. It is to be understood that the portion **15** of the device would include any conventional coin-operated clock or meter mechanism (not shown) which will prevent operation of the knob **46** until sufficient coins have been deposited.

In the operation, assuming a vehicle wheel traverses the plate means **20** in the direction of arrow **27**, the barrier section of the plate is moved to the lower broken-line position shown in Fig. 1 against the force of spring **37**, the parts assuming the position in which they are shown in Fig. 3. As the vehicle wheels runs off the plate, the latter returns to its normal position, namely, that shown in Fig. 1 under influence of spring **37**. If the vehicle were then moved rearwardly, the wheel (or wheels) would contact the edge of the barrier section of the plate and would move the plate upwardly to the upper broken-line position of Fig. 1 which is the plate-locking position. This movement of the plate is resisted by a spring **50** provided about the rod **30** below a disk **51** adjacent the collar **36** as best shown in Fig. 4. The spring **50** is supported upon the flange **53** in the column **12**. Also, spring **37** to some extent resists such movement of the plate. When the pressure against the plate is relieved, it returns to its normal position.

If desired, a roller **55** may be provided at the edge of the plate to minimize the possibility of the vehicle tire obtaining a purchase on the edge of the plate.

As previously indicated, in order to release the plate so that the car may be driven away, it is necessary to insert the proper amount of coins in the coin-release mechanism so that the knob **46** may be manually actuated to retract the finger **44**. When this is done, the cylinder **40** is released and the weight of the barrier section **21** of the plate is sufficient to overcome the remainder of the parts of the device connected thereto with the result that the parts **14** move to the position shown in Fig. 5, and the barrier plate moves to the lower broken-line position of Fig. 1. As the wheel of the car traverses the plate

means 11 it forces the reset plate section to its normal position, raising the barrier plate section and returning the parts to the position of Fig. 1, wherein the latch 44 springs into position above cylinder 40.

I may also provide an auxiliary means to prevent a person from releasing the latch 44 prematurely for a minimum parking fee and then leaving his vehicle in the parking stall for an extended period of time beyond the minimum fee. This means comprises a spring-loaded cylinder 60, which is normally held retracted by a spring-pressed latch finger 61. Within the cylinder 60 is a compression coil spring 63 which is compressed when the parts are in the position shown in Fig. 1. The latch finger 61 is automatically retracted by a ratchet wheel 65 connected to a timing mechanism (not shown), which may be set in operation in response to actuation of the release knob 46. Thus if a person releases latch finger 44 and then fails to remove the car from the parking stall within the time period for which the time mechanism which drives wheel 65 is set, then the latch finger 61 will be retracted, permitting spring 63 to force the cylinder 60 down against the upper end of rod 30 as shown in Fig. 6. This action thus forces cylinder 40 from the position of Fig. 5, where it is free of latch 44, to the position of Fig. 6, where it is engaged by latch 44. Then in order to release the mechanism to permit removal of the vehicle, a person must first reset cylinder 60 and then deposit additional money to permit actuation of release knob 46. For the convenience of returning the cylinder 60 to its normal position, I provide a foot pedal reset member 66 rigidly connected to shaft 24.

Although I have shown and described a preferred form of the invention, I contemplate that various modifications and changes can be made without departing from the invention, the scope of which is indicated by the claims.

I claim:

1. In vehicle parking control means adapted for use in conjunction with means providing a vehicle-supporting surface, a plate at said surface adapted to be traversed by a wheel of the vehicle, said plate having a barrier section in one plane and a reset section in another plane, said planes forming an obtuse angle, means supporting said plate for pivotal movement abount an axis substantially along the intersection of said barrier and reset sections of the plate, first spring means normally resiliently holding said plate in position with said barrier section up but short of its uppermost position, second spring means resisting further upward movement of said barrier section of said plate, latch means normally effective to hold said first spring operative, and means for releasing said latch means thereby relieving said plate of the force of said first spring means.

2. In vehicle parking control means adapted for use in conjunction with means providing a vehicle-supporting surface, a plate at said surface adapted to be traversed by a wheel of the vehicle, said plate having a barrier section in one plane and a reset section in another plane, said planes forming an obtuse angle, means supporting said plate for pivotal movement about an axis substantially along the intersection of said barrier and reset sections of the plate, a tubular column adapted to support a coin-controlled parking meter mechanism, an upright rod in said column, lever means operatively connecting said rod to said plate, spring means in said column normally resiliently holding said rod in position such that said plate is in position with said barrier section thereof above said surface, latch means normally effective to hold said spring means operative, and means for releasing said latch means thereby relieving said plate of the force of said spring means, said last-mentioned means being adapted to be controlled by the coin-controlled parking meter mechanism.

3. Vehicle parking control means as set forth in claim 2 in which said spring means comprises a compression spring interposed between said column and an abutment on said rod.

4. In vehicle parking control means adapted for use in conjunction with means providing a vehicle-supporting surface, a plate at said surface adapted to be traversed by a wheel of the vehicle, said plate having a barrier section in one plane and a reset section in another plane, said planes forming an obtuse angle, means supporting said plate for pivotal movement about an axis substantially along the intersection of said barrier and reset sections of the plate, a tubular column adapted to support a coin-controlled parking meter mechanism, a vertical rod in said standard, lever means operatively connecting said rod to said plate, a pair of spaced abutments on said rod, a compression coil spring on said rod between said abutments, latch means engaging said spring for preventing movement of said rod in a direction to permit lowering of the barrier section of said plate, and means for releasing said latch means.

5. Vehicle parking control means as set forth in claim 4 in which additional spring means is provided for yieldably resisting upward pivotal movement of the barrier section of said plate from its normal position.

6. Vehicle parking control means as set forth in claim 4 in which means is provided for automatically resetting said latch means after expiration of a given period of time after said latch means has been released.

7. Vehicle parking control means as set forth in claim 4 in which means is provided for automatically resetting said latch means after expiration of a given period of time after said latch means has been released, comprising an auxiliary compression spring in said column positioned to return said first-mentioned spring to its normal position, and a latch for holding said compression spring retracted, said latch being adapted to be connected to a timing means for actuation in response to release of said first-mentioned latch means.

8. In control mechanism of the type described, a three-position positionable element to be controlled, a tubular housing, a rod in said housing extending generally axially thereof, means operatively connecting said rod and said element, a pair of axially spaced abutments on said rod, a compression spring on said rod between said abutments, latch means for releasably holding one end of said spring against movement in one direction, and means on said housing limiting movement of the other end of said spring in the opposite direction.

9. In control mechanism of the type described, a three-position positionable element to be controlled, a tubular housing, a rod in said housing extending generally axially thereof, means operatively connecting said rod and said element, a pair of axially spaced abutments on said rod, a compression spring on said rod between said abutments, latch means for releasably holding one end of said spring against movement in one direction, means on said housing limiting movement of the other end of said spring in the opposite direction, an auxiliary spring supported in said housing resisting movement of said rod in a direction away from said latch means.

References Cited in the file of this patent

UNITED STATES PATENTS

1,240,068	Lytton	Sept. 11, 1917
2,351,086	Wells	June 13, 1944
2,448,765	Browning	Sept. 7, 1948
2,462,610	Burum	Feb. 22, 1949
2,657,486	Sweetser	Nov. 3, 1953