(19) Europäisches Patentamt
European Patent Office
Office européen des brevets

(11) EP 0 878 571 B1

(12) EUROPEAN PATENT SPECIFICATION

(45) Date of publication and mention of the grant of the patent:
28.05.2003 Bulletin 2003/22

(51) Int Cl.[7]: **D03D 39/22**

(21) Application number: **98105291.3**

(22) Date of filing: **24.03.1998**

(54) Weft insertion control apparatus with weft indentifying facility for pile fabric weaving machine

Schusseintragskontrollvorrichtung mit Schussidentifikationsanlage für Frottierwebmaschine

Dispositif de contrôle de l'insertion de trame avec installation pour l'identification de la trame pour métier à poil

(84) Designated Contracting States:
CH DE IT LI

(30) Priority: **14.05.1997 JP 12417597**

(43) Date of publication of application:
18.11.1998 Bulletin 1998/47

(73) Proprietor: **Kabushiki Kaisha Toyota Jidoshokki**
Kariya-shi, Aichi-ken (JP)

(72) Inventors:
- **Tsuji, Yukihiro**
  2-1, Toyoda-cho, Kariya-shi, Aichi-ken (JP)
- **Okuda, Taijirou**
  2-1, Toyoda-cho, Kariya-shi, Aichi-ken (JP)

(74) Representative:
von Fischern, Bernhard, Dipl.-Ing. et al
Hoffmann - Eitle,
Patent- und Rechtsanwälte,
Arabellastrasse 4
81925 München (DE)

(56) References cited:
EP-A- 0 257 857
EP-A- 0 682 131
DE-A- 4 432 452
EP-A- 0 648 875
DE-A- 3 213 935

Note: Within nine months from the publication of the mention of the grant of the European patent, any person may give notice to the European Patent Office of opposition to the European patent granted. Notice of opposition shall be filed in a written reasoned statement. It shall not be deemed to have been filed until the opposition fee has been paid. (Art. 99(1) European Patent Convention).

EP 0 878 571 B1

Description

Field of the Invention

[0001] The present invention relates generally to a pile fabric weaving machine or loom (hereinafter also referred to simply as a loom) and more particularly to a weft insertion control apparatus for the pile fabric loom.

Description of Related Art

[0002] In the pile fabric loom, one unit of pile or unitary pile is formed by using two loosely picked wefts and one, two or three fast picked wefts. Relative distance between a reed beating position for beating the fast picked weft and a cloth fell of a woven fabric remains the same as in the case of the beating in ground pattern weaving and border pattern weaving. By contrast, in the case of beating for the loosely picked weft, the relative distance between the beating position of the reed and the cloth fell of the woven fabric is increased. In this conjunction, in an apparatus disclosed in Japanese Patent Application Laid-open No. 305250/1995 (JP-A-7-305250), a controller provided for changing the relative distance between the beating position and the cloth fell is adapted to be controlled by a control apparatus on the basis of reference pattern data.

[0003] On the other hand, disclosed in Japanese Utility Model Application Laid-open No. 46883/1990 (JU-A-2-46883) is a control function unit which is designed to output selectively a pile weaving signal or a border weaving signal on the basis of a pattern signal generated by a pattern signal generating unit. In this conjunction, it is noted that in order to change the relative position or distance mentioned above, it is necessary not only to discriminate between the pile fabric weaving and the other fabric weaving(s) but also to identify whether a given weft is destined for a first loose picking, a second loose picking or a fast picking.

[0004] In an apparatus disclosed in Japanese Utility Model Application Laid-open No. 51685/1989 (JU-A-64-51685), the rotation phase of a rotating member which rotates once completely in one weaving cycle for forming one or unitary pile is detected by an appropriate sensor means in an attempt to identify the wefts forming the pile as mentioned above.

[0005] However, in the apparatuses described above, generation of noise and chattering can not be avoided regardless of whether the sensor is a contact type or contactless type. Additionally, there are mechanical vibrations intrinsic to the loom. Needless to say, these unfavorable phenomena may lead to erroneous weaving operations. However, troublesome procedures and/or complicated mechanisms are required for coping with the noise, chattering and the vibration mentioned above.

[0006] EP 0 682 131 A1 discloses a pile fabric weaving machine for obtaining a length of pile weaving warp required to form a loop while pile weaving warp tension remains constant. This machine is arranged so as to store a free programmable standard pattern data to predetermine the quantity of the pile weaving warp consumed on the basis of the standard pattern data, and to adjust manipulated variable of a feedback apparatus for feeding pile weaving warp in accordance with the predetermined quantity consumed. In said machine objects to be programmed on and stored in the standard pattern data are weave of terry texture, color, function, density of weft, rotational speed of weaving machine, weft tension, warp tension and pile height. However, since there is no data for identifying the sequence of a first loose picking, a second loos picking or a fast picking required for forming a unitary pile of a terry cloth with, for example, three wefts, in said machine it cannot be determined whether the last weft inserted when a weaving machine stops is the first loose picked weft, the second loose picked weft or the fast picked weft.

[0007] Other weaving machines including a loop ratio control device without determining a specific weft when the weaving machine stops, are disclosed in EP 0 648 875 A1 and EP 0 257 857 A2.

SUMMARY OF THE INVENTION

[0008] In light of the state of the art described above, an object of the present invention to is provide a weft insertion control apparatus for a pile fabric weaving machine or loom which can identify whether a weft to be inserted is destined for a first loose picking, a second loose picking or a fast picking with high accuracy and without involving any appreciable difficulty.

[0009] According to the present invention, this object is attained by the weft insertion control apparatus as specified in claim 1.

[0010] Improvements thereof are specified in the subclaims.

[0011] More specifically, there may be provided a weft insertion control apparatus for a loom for weaving pile fabric by forming piles by changing a relative distance between a beating position of a reed and a cloth fell of a woven fabric, wherein the weft insertion control apparatus includes a weft identifying means for identifying wefts destined for forming each unitary pile. The weft identifying means includes a weaving pattern setting means incorporating a storage for storing weft sequence information concerning the wefts for forming each unitary pile in a state contained in pile weaving

pattern information.

[0012] Each unitary pile is formed by a weft group which includes a predetermined number of wefts, i.e., N wefts (where N = 3, 4 or 5), wherein the wefts are individually destined for the loose picking and the fast picking in a predetermined sequence such that the first weft of the group forming the unitary pile is destined for the first loose picking, the second weft is destined for the second loose picking and at least one of the third to fifth wefts is destined for the fast picking. This sequence is represented by the weft sequence information. By reading out the weft sequence information, weft identification as to whether a current weft inserted in forming a pile weaving pattern is for the first loose picking, the second loose picking or for the fast picking can be realized easily and accurately.

[0013] In a preferred mode for carrying out the invention, the weft insertion control apparatus for the pile fabric weaving loom may further include a transmission command means for issuing a command for transmission of the weft sequence information, and an operation control means for controlling the weaving operation of the loom relating to the weft insertion in accordance with the weft sequence information.

[0014] Thus, when the transmission command means issues the transmission command, the weaving pattern setting means sends the weft sequence information to the operation control means, which responds thereto by controlling the weaving operation for the weft insertion in accordance with the weft sequence information.

[0015] In another preferred mode for carrying out the invention, the transmission command means may be so implemented as to include a rotation angle detecting means for detecting a rotation angle of the loom, wherein the transmission command means issues the command for causing the weaving pattern setting means to transmit the weft sequence information to the operation control means at the instant the rotation angle detecting means detects a predetermined rotation angle.

[0016] The operation control means performs the loom operation control in accordance with the rotation angle (or angular position) of the loom. The detection information which is output from the rotation angle detecting means when the predetermined rotation angle is detected can be used for issuing the transmission command mentioned above. Thus, the operation control means obtains the weft sequence information at the predetermined rotation angle every complete rotation to thereby control the weft inserting or picking operation.

[0017] In yet another preferred mode for carrying out the invention, the weaving pattern setting means may be so arranged as to include a weft information generation error detecting means for detecting errors in generation of the weaving pattern information.

[0018] By virtue of the arrangement for detecting the occurrence of failure or errors in the weaving pattern information, erroneous control of the operation control means due to errors contained in the weft sequence information can be positively prevented.

[0019] With the present invention, it is further contemplated as a second object to provide a weft insertion control apparatus for a pile fabric loom which has a function or capability of stopping the loom at a predetermined stop position with high accuracy in order to facilitate processing when coping with an erroneous weft insertion.

[0020] For achieving the object mentioned just above, there is provided according to a second aspect a weft insertion control apparatus for a loom for weaving pile fabric by forming piles by changing the relative distance between a beating position of a reed and a cloth fell of a woven fabric, which apparatus includes a weft identifying means for identifying wefts destined for forming each unitary pile, a weaving pattern setting means provided in association with the weft identifying means and including a storage for storing weft sequence information concerning the wefts for forming each unitary pile in a state contained in pile weaving pattern information, a transmission command means for commanding transmission of the weft sequence information to an operation control means for controlling weaving operation relating to the weft insertion on the basis of the weft sequence information, a shedding load state detecting means provided in association with the weaving pattern setting means for detecting a shedding load state upon stopping of weaving operations, and a braking control factor storage means provided in association with the operation control means for storing braking control factors for changing timing for stopping a loom driving motor in accordance with a detected shedding load state.

[0021] With the arrangement of the weft insertion control apparatus described above, the preceding brake application control factor and the stop timing in a given previous shedding load state can be made use of for determining the brake application control factor upon stoppage of the weaving operation in a shedding load state corresponding or equivalent to the given previous shedding load state mentioned above. Needless to say, possibility of utilization of the data measured or acquired in the past is very effective for enhancing accuracy for stopping the loom operation steadily at a predetermined position.

[0022] A further object of the present invention is to provide a weft insertion control apparatus for a pile fabric loom which the apparatus is capable of preventing a generation or formation of a weaving bar even when the weaving operation is stopped in the course of beating operation for the fast picked weft.

[0023] In view of the object mentioned just above, there is provided according to yet another aspect of the invention a weft insertion control apparatus for a loom for weaving pile fabric by forming piles by changing a relative distance between a beating position of a reed and a cloth fell, wherein the apparatus includes a weft identifying means for

identifying wefts destined for forming each unitary pile, a weaving pattern setting means provided in association with the weft identifying means and including a storage for storing weft sequence information concerning the wefts for forming each unitary pile in a state contained in pile weaving pattern information on the basis of the weft sequence information, a transmission command means for commanding transmission of the weft sequence information to the operation control means for controlling weaving operation relating to the weft insertion, the operation control means including a distance changing means for changing distance between the reed and the cloth fell, and a distance change control means designed such that when a weft inserted immediately before the loom is stopped is identified as a fast picked weft on the basis of the information transferred from the weaving pattern setting means, the distance change control means controls the distance changing means so that a distance between a first loosely picked weft forming a part of the unitary pile and the cloth fell is increased beyond a distance set for loose picking operation.

[0024] In a mode for carrying out the invention directed to the weft insertion control apparatus mentioned just above, the distance change control means may further be designed so as to control the distance change means such that the distance between the first loosely picked weft and the cloth fell does not become shorter than the distance for the loose picking operation, before the pile is formed. By virtue of this feature, occurrence of a weaving bar in the pile first formed upon restarting of the loom can be positively prevented.

[0025] In yet further preferred mode for carrying out the invention, the distance change control means may be designed such that when a weft inserted immediately before the loom is stopped is identified as a fast picked weft on the basis of the information transferred from the weaving pattern setting means, the distance change control means advances timing for the stopping operation of the distance changing means relative to the stop timing in insertion of wefts of the unitary pile other than the fast picked weft.

[0026] Owing to the arrangement described above, the stop timing of the terry motion means is advanced by the distance change control means, whereby generation of weaving bar in the pile first formed upon restarting of the weaving operation can be prevented.

[0027] The above and other objects, features and attendant advantages of the present invention will more easily be understood by reading the following description of the preferred embodiments thereof taken, only by way of example, in conjunction with the accompanying drawings.

BRIEF DESCRIPTION OF THE DRAWINGS

[0028] In the course of the description which follows, reference is made to the drawings, in which:

Fig. 1 is a side elevational view showing generally and schematically a structure of a pile fabric weaving loom according to a first embodiment of the present invention;

Fig. 2 is a functional block diagram showing schematically an arrangement of a weft insertion control apparatus having a weft identifying function for pile fabric weaving according to the first embodiment of the invention;

Fig. 3 is a flow chart illustrating a weft identification control program executed by a loom control computer shown in Fig. 2;

Fig. 4 is a flow chart illustrating a weft identification control program executed by a weaving pattern setting unit shown in Fig. 2;

Fig. 5 is a block diagram showing schematically a weft insertion control apparatus for a pile fabric weaving loom according to a second embodiment of the present invention;

Fig. 6 is a flow chart for illustrating a weft information generation error detecting program executed by a weft information generation error detecting unit in the weft insertion control apparatus according to the second embodiment of the invention;

Fig. 7 is a flow chart for illustrating a first phase of a weaving operation stop control procedure executed by a loom control computer incorporated in the weft insertion control apparatus according to a third embodiment of the present invention;

Fig. 8 is a flow chart for illustrating a second phase of the weaving operation stop control program executed by the loom control computer according to the third embodiment of the invention;

Fig. 9 is a flow chart for illustrating a third phase of the weaving operation stop control program executed by the loom control computer according to the third embodiment of the invention;

Fig. 10 is a flow chart for illustrating a stop control procedure executed by the loom control computer according to the third embodiment of the invention;

Fig. 11 is a flow chart for illustrating a first phase of a control procedure for preventing formation of a weaving bar, as executed by the apparatus according to a fourth embodiment of the present invention;

Fig. 12 is a flow chart for illustrating a second phase of the control procedure for preventing formation of a weaving bar according to the fourth embodiment of the invention;

Fig. 13 is a graph for illustrating the relation between a rotational position of a terry motion motor and a loom

rotation angle;

Fig. 14 is a front view showing a structure of another type of loom to which the present invention can equally find application as a fifth embodiment thereof.

Fig. 15A is a sectional view for illustrating occurrence of a weaving bar during beating operation of a fast picked weft due to a delay in stopping a loom; and

Fig. 15B is another sectional view for illustrating occurrence of a weaving bar during beating operation of a fast picked weft due to delay in stopping the loom.

DESCRIPTION OF THE PREFERRED EMBODIMENTS

[0029] Now, the present invention will be described in detail in conjunction with what is presently considered as preferred or typical embodiments thereof by reference to the drawings. In the following description, like reference characters designate like or corresponding parts throughout the several views. Also in the following description, it is to be understood that such terms as "left", "right", "front", "rear" and the like are words of convenience and are not to be construed as limiting terms.

Embodiment 1

[0030] Now, description will be made of a weft insertion control apparatus for a loom for weaving pile fabric according to a first embodiment of the present invention by reference to Figs. 1 to 4.

[0031] Figure 1 is a side elevational view showing generally and schematically a structure of the loom. As can be seen in Fig. 1, a ground weaving warp beam 11 is driven by a delivery motor (not shown). Ground weaving warps Tg fed out from the ground weaving warp beam 11 are guided by means of a back roller 12 and a tension roller 13 to pass through a heald 14 and a reed 15. A woven fabric W is taken up by a cloth roller 20 via guide rollers 18 and 19 after undergoing treatment by an expansion bar 16 and a surface roller 17.

[0032] A pile weaving warp beam 21 is disposed above the ground weaving warp beam 11. Pile weaving warps Tp fed out from the pile weaving warp beam 21, being driven by a delivery motor (not shown) are caused to pass through the heald 14 and the reed 15 while being applied with tension by means of a tension roller 22.

[0033] An intermediate lever 23 is mounted rotatably or swingably on a supporting shaft 231 substantially at a center location of the loom as viewed in the longitudinal direction thereof. Further, a supporting lever 24 is mounted rotatably or swingably on a supporting shaft 241 at a rear portion of the loom, wherein the tension roller 22 mentioned above is supported on the supporting lever 24. The intermediate lever 23 and the supporting lever 24 are interlinked by means of a rod 25. Another supporting lever 26 is mounted swingably on a supporting shaft 261 at a front portion of the loom, wherein the expansion bar 16 mentioned above is supported on the supporting lever 26. The supporting lever 26 and the intermediate lever 23 are interlinked by means of a rod 27. Thus, upon rotation or swing of the intermediate lever 23, the supporting levers 24 and 26 are caused to rotate or swing in a same rotational direction, whereby the tension roller 22 and the expansion bar 16 are caused to displace in a same direction for a same distance. As a result of this, the path for the pile weaving warps Tp and the path for the woven fabric W are displaced correspondingly, being accompanied by displacement of a cloth fell W1 of the woven fabric W.

[0034] Further referring to Fig. 1, a supporting box 29 is disposed above the intermediate lever 23. A terry motion motor 28 is fixedly mounted on the supporting box 29. The terry motion motor 28 has an output shaft having a portion implemented in the form of a ball screw 281, wherein the output shaft of the terry motion motor 28 extends into the supporting box 29 so that the ball screw portion 281 is located within the supporting box 29. Adriven nut member 30 meshes with the ball screw portion 281 through the medium of balls (not shown). The terry motion motor_28 is controlled by a terry motion controller C1 which constitutes an operation control means.

[0035] Supported rotatably within the supporting box 29 is a supporting shaft 31 on which a direction switching lever 32 is mounted. The direction switching lever 32 and the driven nut member 30 mentioned above are coupled to each other by means of a link 33. Further, the direction switching lever 32 is linked to the intermediate lever 23 by means of a rod 34. Consequently, reciprocative displacements of the driven nut member 30 taking place in accompanying forward/backward rotation of the ball screw portion 281 are transmitted to the expansion bar 16 by way of a displacement transmission mechanism which is constituted by the link 33, the direction switching lever 32, the rod 34, the intermediate lever 23, the rod 27 and the supporting lever 26, as a result of which the expansion bar 16 is caused to swing or displace angularly around the supporting shaft 261. Thus, when the direction switching lever 32 assumes the position indicated by a solid line in Fig. 1, the expansion bar 16 is disposed at the terry-zero position indicated by a solid line in Fig. 1, whereas when the direction switching lever 32 is at a position indicated by a broken line in Fig. 1, the expansion bar 16 is disposed at the terry forming position indicated by a broken line in Fig. 1. Further, the reciprocative displacement of the driven nut member 30 is transmitted to the tension roller 22 by way of the intermediate lever 23, the rod 25 and the supporting lever 24.

[0036] A loom driving motor Mo for driving the reed 15 is controlled by the loom control computer Co (serving as a transmission command means, as described hereinafter) . Connected electrically to the loom control computer Co is a weaving pattern setting unit 35 which includes an input/output control circuit 40 and a storage unit 41, as shown in Fig. 2, wherein an input unit 42 is electrically connected to the input/output control circuit 40 of the weaving pattern setting unit 35 for inputting weaving pattern information, which information is then stored in the storage unit 41 under the control of the input/output control circuit 40. The weaving pattern setting unit 35 supplies the weaving pattern information to the loom control computer Co which in turn transfers to the terry motion controller C1 the weaving pattern information received from the weaving pattern setting unit 35. The terry motion controller C1 controls the operation of the terry motion motor 28 on the basis of the weaving pattern information obtained from the loom control computer Co.

[0037] The weaving pattern information contains a weaving pattern command on a pick-by-pick basis. As the weaving patterns, there may be mentioned a pile weaving pattern G1(N), a ground weaving pattern G2 and a border weaving pattern G3. In this conjunction, N (= 3, 4 or 5) mentioned just above represents the number of wefts used for forming a unitary pile. At this juncture, it is to be noted that the ground weaving pattern information for each pick contains only the ground weaving pattern command information "G2" with the border weaving pattern information for each pick similarly containing only the border weaving pattern command information "G3". By contrast, the pile weaving pattern information for each pick is composed of the combined information "G1(N), n" of pile weaving pattern command information "G1(N)" indicating the pile weaving and the weft sequence information "n".

[0038] Referring to Fig. 2, the terry motion controller C1 is comprised of a storage unit 36, a control circuit 37 and a driving circuit 38. The storage unit 36 is designed so as to store not only the position control data for the terry motion motor 28 but also to temporarily store the weaving pattern information transferred from the loom control computer Co. The control circuit 37 outputs to the driving circuit 38 a control command on the basis of the weaving pattern information stored in the storage unit 36 and the rotation angle information supplied from a rotary encoder 39 provided for detecting the rotation angle (or angular position) of the loom. On the other hand, the driving circuit 38 is designed so as to perform feedback control of the terry motion motor 28 on the basis of the control command supplied from the control circuit 37 and the rotation angle information supplied from a rotary encoder 282 incorporated in the terry motion motor 28 (also see Fig. 1)

[0039] The loom control computer Co is programmed to execute a weft identification control program illustrated in a flow chart of Fig. 3, while the weaving pattern setting unit 35 is programmed to execute the weft identification control program illustrated in the flow chart of Fig. 4. In the following, the weft identification control procedure will be described by reference to the flow charts shown in Figs. 3 and 4.

[0040] Upon detection of a predetermined rotation angle θo by the rotary encoder 39 which is designed for detecting a loom rotation angle θ (step S101), the loom control computer Co issues a weaving pattern request signal to the weaving pattern setting unit 35 (step S102). In response to the reception of the weaving pattern request signal in step S109, the input/output control circuit 40 of the weaving pattern setting unit 35 reads out the weaving pattern information stored in the storage unit 41 to thereby output the weaving pattern command information contained in the weaving pattern information to the loom control computer Co (step S110). When the weaving command information is received (step S103), decision is made by the loom control computer Co as to whether the weaving pattern command information is the ground weaving pattern command information "G2", the border weaving pattern command information "G3" or the pile weaving pattern command information "G1(N)" in step S104. In case the weaving pattern command information is either the ground weaving pattern command information "G2" or the border weaving pattern command information "G3", the loom control computer Co transfers the weaving pattern command information (i.e., either the information "G2" or "G3") to the terry motion controller C1 (step S105) and then waits for succeeding detection of the predetermined rotation angle θo of the loom. The terry motion controller C1 temporarily stores the weaving pattern command information (i.e., "G2" or "G3") sent from the loom control computer Co in the storage unit 36. At this juncture, it should be noted that the weaving pattern command information (i.e., "G2" or "G3") is used to control the operation of the terry motion motor 28 after two rotations of the loom from the instant at which the predetermined rotation angle θo mentioned previously is detected. More specifically, the terry motion controller C1 controls operation of the terry motion motor 28 such that the expansion bar 16 is positioned at the terry-zero position on the basis of the weaving pattern command information, i.e., ground weaving pattern command information "G2" or border weaving pattern command information "G3".

[0041] On the other hand, when the weaving pattern command information is the pile weaving pattern command information "G1 (N) " (i.e., when the decision step S104 results in affirmation "YES"), the loom control computer Co stores the pile weaving pattern command information "G1(N)", while issuing a weft sequence request signal to the weaving pattern setting unit 35 (in a step S106). In response to the weft sequence request signal (step S111), the input/output control circuit 40 of the weaving pattern setting unit 35 reads out the pile weaving pattern information stored in the storage unit 41 to thereby output the weft sequence information "n" contained in the weaving pattern information to the loom control computer Co (step S112). In response to the reception of the weft sequence information "n" (i.e., when the step S107 is "YES"), the loom control computer Co transfers a combination of the pile weaving pattern

command information "G1(N)" and the weft sequence information "n" to the terry motion controller C1 in a step S108 and then waits for succeeding detection of the predetermined rotation angle θo of the loom. In that case, the terry motion controller C1 temporarily stores the pile weaving pattern command information "G1(N)" and the weft sequence information "n" which are sent from the loom control computer Co in the storage unit 36. At this juncture, it should be noted that the pile weaving pattern command information "G1(N)" and the weft sequence information "n" are used to control the operation of the terry motion motor 28 after two rotations of the loom from the instant at which the predetermined rotation angle θo mentioned previously is detected. More specifically, the terry motion controller C1 controls operation of the terry motion motor 28 such that the expansion bar 16 is positioned at the terry-zero position or the terry forming position on the basis of the pile weaving pattern command information "G1(N)" and the weft sequence information "n".

[0042] In the above description, n represents an integer within a range of 1 to N, and n equal to "1" indicates first loose picking with n equal to "2" indicating second loose picking. Further, when N is equal to "3", then n equal to "3" indicates the fast picking. Similarly, when N = 4, then n equal to "3" or "4" indicates the fast picking. In addition, when N = 5, then n equal to "3", "4" or "5" indicates the fast picking. Consequently, when n equals "1" or "2", the terry motion controller C1 controls the operation of the terry motion motor 28 so that the expansion bar 16 can be positioned at the terry forming position, whereas when n equals "3", "4" or "5", the terry motion controller C1 controls the operation of the terry motion motor 28 so that the expansion bar 16 is positioned at the terry-zero position.

[0043] By virtue of the arrangement of the weft insertion control apparatus having the weft identifying function for the pile fabric weaving according to the first embodiment of the invention described above, the advantageous effects mentioned below can be obtained.

(a) The weaving pattern setting unit 35 serves as the weaving pattern setting means imparted with the function for storing the weft sequence information "n" for the pile weaving pattern in the state contained in the pile weaving pattern information. Each unitary pile is formed by a weft group including a predetermined number of wefts, i.e., N wefts (where N = 3, 4 or 5), wherein the wefts are assigned to the loose picks and the fast pick in a predetermined sequence such that a first weft of the group forming the unitary pile is destined for the first loose picking, the second weft is destined for the second loose picking and at least one of the third to fifth wefts is destined for the fast pick. This sequence is represented by the weft sequence information. By containing the weft sequence information in the pile weaving pattern information, weft identification or decision as to whether a current weft inserted in forming a pile weaving pattern is for the first loose pick, the second loose pick or for the fast pick can be made easily and correctly.

(b) The loom control computer Co responds to the signal indicating the detection of the predetermined rotation angle θo as issued by the rotary encoder 39 which constitutes the command issuing means to thereby send the weft sequence request signal to the weaving pattern setting unit 35 which in turn sends the weft sequence information "n" to the terry motion controller C1 through the medium of the loom control computer Co. The terry motion controller C1 serving as the operation control means controls the weft insertion by correspondingly controlling the terry motion motor 28 on the basis of the weft sequence information "n". The command for sending the weft sequence information "n" to the terry motion controller C1 has to be issued accurately at a predetermined rotation angle during one rotation of the loom. In this conjunction, it is noted that the rotary encoder 39 which is capable of detecting the rotation angle of the loom is suited advantageously as the command issuing means.

Embodiment 2

[0044] Next, description will be directed to a second embodiment of the present invention by reference to Figs. 5 and 6. In the figures, like reference characters as those used in the description of the first embodiment are used to designate like or equivalent components.

[0045] Referring to Fig. 5, electrically connected to the loom control computer Co is a weft information generation error or failure detecting unit 43 to which a display unit 44 is electrically connected. The following Table 1 indicates, by way of example only, normal and abnormal weaving pattern command information and weft sequence information.

TABLE 1

WEAVING PATTERN COMMAND INFORMATION	WEFT SEQUENCE INFORMATION "n"	
"G1(3)"	n=1,2,3	NORMAL
"G1(3)"	n=4,5	ABNORMAL
"G1(4)"	n=1,2,3,4	NORMAL

TABLE 1 (continued)

WEAVING PATTERN COMMAND INFORMATION	WEFT SEQUENCE INFORMATION "n"	
"G1(4)"	n=5	ABNORMAL
"G1(5)"	n=1,2,3,4,5	NORMAL
"G1(5)"	NONE	ABNORMAL
"G2","G3"	NONE	NORMAL

[0046] The weft information generation error detecting unit 43 serving as a weft information weft information generation error detecting means performs detection of the generation error or failure in the weaving pattern information in accordance with a weft information generation error detecting program illustrated in a flow chart in Fig. 6. The loom control computer Co outputs the weaving pattern information to both the terry motion controller C1 and the weft information generation error detecting unit 43. In response, the terry motion controller C1 performs control similar to the case of the first embodiment on the basis of the weaving pattern information, while the weft information generation error detecting unit 43 detects the weft information generation error of the weaving pattern information in accordance with the weft information generation error detection program illustrated in Fig. 6. When it is determined that an abnormality has been detected (i.e., when the results of decision steps S202 to S206 are negative "NO"), the weft information generation error detecting unit 43 issues a weaving stop signal (step S207) and at the same time causes the display unit 44 to display that an abnormality occurred (step S208), which results in the loom control computer Co stopping the weaving operation in response to the input of the weaving stop signal. With such detection of the weft information generation error in the weaving pattern, it is possible to prevent the terry motion controller C1 from carrying out erroneous control by detecting the failure or error contained in the weft sequence information.

[0047] Further, the weft information generation error detecting unit 43 may be arranged so as to detect normalities and abnormalities in the weaving pattern command information and the weft sequence information as listed in Table 2 below.

TABLE 2

CURRENT PICK		SUCCEEDING PICK	
WEAVING PATTERN COMMAND INFORMATION	WEFT SEQUENCE INFORMATION	WEAVING PATTERN COMMAND INFORMATION	WEFT SEQUENCE INFORMATION
"G1(3)"	n=1	"G1(3)"	n=2
"G1(3)"	n=2	"G1(3)"	n=3
"G1(3)"	n=3	ARBITRARY	N=1 IF G1(N)
"G1(4)"	n=1	"G1(4)"	n=2
"G1(4)"	n=2	"G1(4)"	n=3
"G1(4)"	n=3	"G1(4)"	n=4
"G1(4)"	n=4	ARBITRARY	N=1 IF G1(N)
"G1(5)"	n=1	"G1(5)"	n=2
"G1(5)"	n=2	"G1(5)"	n=3
"G1(5)"	n=4	"G1(5)"	n=4
"G1(5)"	n=4	"G1(5)"	n=5
"G1(5)"	n=5	ARBITRARY	N=1 IF G1(N)
"G2","G3"	NONE	ARBITRARY	N=1 IF G1(N)

[0048] In the above Table 2, it is assumed that all the weaving pattern command information and the weft sequence information is correct. The weft information generation error detecting unit 43 serving as the weft information generation error detecting means performs a detection procedure for detecting the generation or occurrence of an error or failure in the weaving pattern information in accordance with the weft information generation error detecting program. By way

of example, in case both the preceding weaving pattern information and the current weaving pattern information contain the pile weaving pattern G1(3) and "n" of the current weft sequence information is equal to "1" with "n" of the preceding weft sequence information being "3", it is determined that the weft insertion information is normal. If otherwise, an abnormality is determined. Then, the weft information generation error detecting unit 43 issues a weaving stop signal (step S207) and at the same time causes the display unit 44 to display the occurrence of an abnormality (step S208), which results in the loom control computer Co stopping the weaving operation in response to the input of the weaving stop signal. Parenthetically, it should be added that the weft information generation error detecting unit 43 can alternatively be so designed as to detect the weft information generation error before the weaving operation is started.

Embodiment 3

[0049] Next, description will be made of a third embodiment of the invention which is directed to a weaving operation stop control procedure.

[0050] Figures 7 to 10 illustrate in flow charts a stop control program executed by the loom control computer Co incorporated in the weft insertion control apparatus for a pile fabric weaving according to the third embodiment of the present invention. Now, referring to Figs. 7 to 10, the control procedure for stopping the loom driving motor Mo will be described.

[0051] When a weaving stop signal such as mentioned hereinbefore is input (step S301), the control circuit 37 of the terry motion controller C1 determines the type of weaving pattern on the basis of the weaving pattern information containing the weft sequence information which is obtained from the weaving pattern setting unit 35 by way of the loom control computer Co (step S301 in Fig. 7). In case the weaving pattern is for the ground weaving or for the border weaving (i.e., when decision step S302 results in "NO"), the control circuit 37 reads out from the storage unit 36 a braking start angle $\theta 4(So)$ and a stop angle $\theta 4(Eo)$ for the wefts in the preceding weaving pattern except for the pile weaving pattern, to thereby arithmetically determine or calculate a braking start angle $\theta 4(S)$ on the basis of the braking start angle $\theta 4(So)$ and the stop angle $\theta 4(Eo)$ in a step S320 shown in Fig. 9. To this end, the calculation method disclosed, for example, in Japanese Patent Application Laid-open No. 176242/1982 (JP-A-57-176242) may be adopted. At the point in time when the loom rotation angle θ detected by the rotary encoder 39 coincides with the braking start angle $\theta 4$ (S) as calculated (step S321 shown in Fig. 10), the control circuit 37 issues a braking start command signal, whereby braking is applied to the loom driving motor Mo, starting from the time point mentioned above (step S322 in Fig. 10). The rotation speed of the loom driving motor Mo is detected by the control circuit 37 on the basis of the loom rotation angle information available from the output of the rotary encoder 39. When the rotation speed of the loom driving motor Mo becomes zero (step S323 in Fig. 10), the control circuit 37 stores in the storage unit 36 the loom rotation angle $\theta = \theta 4$ (E) at that instant as the stop angle with the braking start angle $\theta 4$ (S) being stored in the storage unit 36 as well (step S324 in Fig. 10).

[0052] In case the weaving pattern is for the pile weaving with the weft being for the first loose pick (i.e., when both the decision steps S302 and S303 are "YES"), the control circuit 37 reads out from the storage unit 36 a braking start angle $\theta 1(So)$ and a stop angle $\theta 1(Eo)$ for the first loosely picked weft in the preceding pile weaving pattern, to thereby arithmetically determine or calculate a braking start angle $\theta 1(S)$ on the basis of the braking start angle $\theta 1(So)$ and the stop angle $\theta 1(Eo)$ in a step S304 shown in Fig. 7. When the loom rotation angle θ detected by the rotary encoder 39 coincides with the braking start angle $\theta 1(S)$ as calculated (step S305 in Fig. 7), the control circuit 37 issues the braking start command signal (step S306 in Fig. 7), whereby braking is applied to the loom driving motor Mo, starting from the time point mentioned above. When the rotation speed of the loom driving motor Mo becomes zero (see step S307 in Fig. 8), the control circuit 37 stores in the storage unit 36 the loom rotation angle $\theta = \theta 1$ (E) at that instant as the stop angle and at the same time stores the braking start angle $\theta 1(S)$ in the storage unit 36 in a step S308 shown in Fig. 8.

[0053] In the case where it is decided the weaving pattern is for a pile weaving and that the weft is for the second loose pick (step S309 in Fig. 8), the control circuit 37 reads out from the storage unit 36 a braking start angle $\theta 2$ (So) and a stop angle $\theta 2$ (Eo) for the second loosely picked weft in the preceding pile weaving pattern, to thereby calculate a braking start angle $\theta 2$ (S) on the basis of the braking start angle $\theta 2$ (So) and the stop angle $\theta 2$ (Eo) in a step S310 shown in Fig. 8. When the loom rotation angle θ detected by the rotary encoder 39 coincides with the braking start angle $\theta 2$ (S) in a step S311 in Fig. 8, the control circuit 37 issues the braking start command signal, whereby brake is applied to the loom driving motor Mo, starting from the time point mentioned above in step S312 in Fig. 8. When the rotation speed of the loom driving motor Mo becomes zero as decided in step S313, the control circuit 37 stores in the storage unit 36 the loom rotation angle $\theta = \theta 2$ (E) at that time point as the stop angle with the braking start angle $\theta 2$ (S) also being stored in the storage unit 36.

[0054] Further, in the case where it is determined that the weaving pattern is for the pile weaving and the weft is for the fast pick (i.e., when the decision step S309 shown in Fig. 8 results in "NO"), the control circuit 37 reads out from the storage unit 36 a braking start angle $\theta 3(So)$ and a stop angle $\theta 3(Eo)$ for the fast picked weft in the preceding pile weaving pattern, to thereby determine or calculate a braking start angle $\theta 3(S)$ on the basis of the braking start angle

θ3 (So) and the stop angle θ3(Eo) in a step S315 shown in Fig. 9. At a time point when the loom rotation angle θ detected by the rotary encoder 39 coincides with the braking start angle θ3 (S) (see step S316 in Fig. 9), the control circuit 37 issues the braking start command signal, whereby brake is applied to the loom driving motor Mo, starting from the above-mentioned time point (step S317 in Fig. 9). When the rotation speed of the loom driving motor Mo becomes zero as determined in step S318 shown in Fig. 9, the control circuit 37 stores in the storage unit 36 the loom rotation angle θ = θ3(E) at that time as the stop angle with the angle θ3(S) being also stored in the storage unit 36 as the braking start angle (step S319 in Fig. 9).

[0055] In response to the input of the weaving start signal after having stored the stop angle and the braking start angle, the loom control computer Co starts operation of the loom driving motor Mo to allow the weaving operation to be restarted.

[0056] The control apparatus for a pile fabric weaving machine according to the third embodiment of the invention brings about advantageous effects below.

(c) The storage unit 36 serves not only as a braking control factor storage means for storing the timing or time point at which the brake application to the loom driving motor Mo is started but also serves as a stop timing storage means for storing the timing or time point at which braking applied to the loom driving motor Mo is stopped. On the other hand, the rotary encoder 39 serves as a stop timing measuring means for determining the stop timing or time point at which the loom driving motor Mo is to be stopped. At this juncture, it should be mentioned that differences in the weaving patterns as well as differences in the first loosely picked weft, the second loosely picked weft and the fast picked weft make appearance as differences or variations in the shedding load. Thus, the shedding load state prevailing when the weaving operation is to be stopped differs depending on the type of weft picking. On the other hand, variation in the shedding load state exerts influence to the stop timing of the loom driving motor Mo. More specifically, the loom driving motor Mo is stopped at an earlier time point as the shedding load increases. In this conjunction, the control circuit 37 and the weaving pattern setting unit 35 constitute a shedding load state detecting means for detecting the shedding load state upon stopping of the weaving operation, wherein the control circuit 37 serves as the weft identifying means while the weaving pattern setting unit 35 serves as the weaving pattern setting means. Additionally, the control circuit 37 can function as a braking start control means for determining the brake application start timing for the loom driving motor Mo in the succeeding stoppage of the weaving operation on the basis of the preceding brake application start and stop timings (time points) in the corresponding shedding load state. In this way, the preceding brake application start and stop timings (time points) in a given shedding load state are made use of in determining the succeeding brake application start and stop timings (time points) in a shedding load state corresponding to or equivalent to the given shedding load state mentioned above. Needless to say, the possibility of utilizing the data measured or acquired during operation is very effective in ensuring high accuracy for stoppage of the loom operation at predetermined position(s).

(d) According to the teachings of the invention as seen in the third embodiment described above, control of the brake application start timing can be great by facilitated, and the brake application start timing can be advantageously made use of as a brake application control factor for variably controlling the brake application stop timing.

Embodiment 4

[0057] Next, referring to the flow charts shown in Figs. 11 to 13, description will be made of a fourth embodiment of the invention which is directed to a control procedure for preventing formation or occurrence of a weaving bar (also known as a weft bar or filling bar). For a better understanding of the teachings of the invention as seen in the fourth embodiment, weft insertion failure will first be described by reference to Figs. 15A and 15B.

[0058] As can be seen in Figs. 15A and 15B, a unitary pile P is constituted by a first loosely picked weft Y2, a second loosely picked weft Y3 and a fast picked weft Y1. Figure 15A shows a situation where the second loosely picked weft Y3 is beaten by the reed 15 at a predetermined position K1 when the second loosely picked weft Y3 suffers insertion failure and when the loom stops at a predetermined rotation angle. On the other hand, Fig. 15B shows another situation in which the loom stops with a delay and the reed 15 approaches a position close to the cloth fell W1 of the woven fabric as indicated by K2, whereby the first loosely picked weft Y2 having already been inserted is pushed toward the cloth fell W1.

[0059] As described hereinbefore, the loom control computer Co and the terry motion controller C1 have acquired the information concerning the rotation angle of the loom on the basis of the loom rotation angle information derived from the output of the rotary encoder 39. During the weaving operation, the terry motion controller C1 performs synchronization control for synchronizing the terry motion motor 28 with the rotation of the loom on the basis of the loom rotation angle information derived from the output of the rotary encoder 39.

[0060] When a weft insertion failure detector (not shown) disposed at a terminal end for the weft insertion detects occurrence of weft insertion failure (step S401 shown in Fig. 11), the loom control computer Co acquires information

of the weft insertion failure at a loom rotation angle θm (see Fig. 13). Parenthetically, the curve E shown in Fig. 13 represents a pattern of rotation position of the terry motion motor 28 in the operation for weaving a three-weft towel texture. The loom rotation angle 0° represents the beating time point or timing. The rotational or angular position αo corresponds to the terry-zero position in front of the cloth fell W1 while rotational position α1 corresponds to the terry forming position in front of the cloth fell W1.

[0061] The loom control computer Co makes a determination on the basis of the weft sequence information contained in the weaving pattern information as to whether or not the weft suffering the insertion failure is the second loosely picked weft in a step S402 shown in Fig. 11. Unless the weft suffering the insertion failure is the second loosely picked weft (i.e., when the decision step S402 results in "NO"), the loom control computer Co outputs a synchronization control stop command signal to the terry motion controller C1 (step S407 in Fig. 11). When the rotation angle of the loom coincides with the predetermined rotation angle θo, the loom control computer Co outputs an operation stop command to the loom driving motor Mo. Thus, braking is applied to the loom driving motor Mo to stop the rotation thereof (step S408 in Fig. 11). In this conjunction, it is noted that rotation of the loom driving motor Mo is stopped substantially at a time point corresponding to a loom rotation angle θs. As a result, the fast picking of the weft is inhibited or prevented.

[0062] The terry motion controller C1 responds to reception of the synchronization control stop command signal to stop operation of the terry motion motor 28. In that case, the terry motion controller C1 synchronizes the stop of operation of the terry motion motor 28 with the stop of the loom driving motor Mo on the basis of the loom rotation angle information derived from the output of the rotary encoder 39. Thus, the terry motion motor 28 is caused to stop at a rotational position αs corresponding to the loom rotation angle θs.

[0063] In succession to the stoppage of operation of the loom, the loom control computer Co rotates reversely the loom driving motor Mo for a predetermined angular distance at a low speed (step 5409 shown in Fig. 11). Consequently, the loom rotates in the reverse or backward direction about one and a half turns to stop at the loom rotation angle θ1 (see Fig. 13). In that case, the reed 15 assumes a maximum retracted position remote from the cloth fell W1 of the woven fabric W at maximum, whereby the shedding defined by warps is set to a maximum degree for allowing the weft suffering the insertion failure to be removed. After removal of the weft suffering the insertion failure from the shedding, a starting switch 45 is turned on (step S410 in Fig. 11). The loom control computer Co responds to the weaving operation start signal generated upon closing of the starting switch 45 to output the synchronization control start signal to the terry motion controller C1 in a step S411 while restarting the weaving operation by activating the loom driving motor Mo. On the other hand, the terry motion controller C1 restarts the synchronization control described hereinbefore in response to reception of the synchronization control start signal (step S412 in Fig. 11).

[0064] If the weft suffering the insertion failure is the second loosely picked weft (i.e., when the decision step S402 is affirmative "YES"), the loom control computer Co issues a forcive stop command signal to the terry motion controller C1 in a step S403 shown in Fig. 11. At the time point at which the rotation angle of the loom coincides with the predetermined rotation angle θo, the loom control computer Co issues an operation stop command for the loom driving motor Mo (step S405). Thus, braking is applied to the loom driving motor Mo to stop the rotation thereof.

[0065] The terry motion controller C1 responds to reception of the forced control stop command signal to forcibly stop the operation of the terry motion motor 28 (steps S421 and S422 in Fig. 12). In that case, the terry motion controller C1 immediately stops without synchronizing the stop of operation of the terry motion motor 28 with that of the loom. Thus, the terry motion motor 28 may stop, for example, at a rotational position indicated by $\underline{\alpha}$ in Fig. 13. With such rotational position, the expansion bars 16 stops, for example, at a position slightly closer to the reed 15 than the terry forming position as indicated by broken line in Fig. 1, and the cloth fell W1 of the woven fabric W also stops at a position slightly closer to the reed 15 than the terry forming position, as indicated by the broken line in Fig. 1.

[0066] In succession to the stoppage of the loom operation, the loom control computer Co reversely rotates the loom driving motor Mo for a predetermined angular distance at a low speed (step S405 in Fig. 11). Due to such slow reverse rotation, the reed 15 is displaced to the maximum retracted position mentioned previously, whereby the shedding is set to maximum for allowing the weft suffering the insertion failure to be removed. After the slow reverse rotation of the loom driving motor Mo, the loom control computer Co issues a forced-stop clearing signal to the terry motion controller C1 (step S406) The terry motion controller C1 responds to the reception of the forced-stop clearing command signal in a step S423 shown in Fig. 12 to thereby correct the rotational position of the terry motion motor 28 so that it matches with the rotation angle θ1 of the loom in a step S424 shown in Fig. 12.

[0067] After removal of the weft suffering the insertion failure from the shedding, the start switch 45 is turned on (step S410 in Fig. 11). The loom control computer Co responds to the weaving operation start signal generated upon closing of the start switch 45 to thereby output the synchronization control start signal to the terry motion controller C1 (step S411) while restarting the weaving operation by activating the loom driving motor Mo (step S412). On the other hand, the terry motion controller C1 restarts the synchronization control described hereinbefore in a step S428 shown in Fig. 12 in response to the reception of the synchronization control start signal (step S427 in Fig. 12).

[0068] The weft identifying apparatus for the pile fabric weaving according to the fourth embodiment of the invention provides the advantageous effects mentioned below.

(e) The loom control computer Co serves as a weft identifying means for identifying the types of wefts for forming the unitary pile. On the other hand, the terry motion controller C1 serves as a change control means for advancing the stop timing of the terry motion motor 28 serving as a terry motion means when the weft inserted immediately before the loom stop was identified as the fast picked weft. Though the terry motion motor 28 is synchronized with the rotation of the loom during the weaving operation, the terry motion motor 28 is stopped at an early time point without synchronizing with the rotation of the loom when the loom is stopped after the insertion of the fast picked weft Y1. The weft insertion timing falls within a range of 90° to 230° of the loom rotation angle. When the loom driving motor Mo stops with a delay, the distance between the first loosely picked weft Y2 and the cloth fell W1 becomes shorter than the predetermined distance, as illustrated in Fig. 15B, giving rise to formation of a weaving bar representing a failure or defect in forming the pile. In this conjunction, it should be noted that by virtue of the arrangement according to the instant embodiment of the invention, the distance between the cloth fell W1 and the first loosely picked weft Y2 preceding to the second loosely picked weft Y3 suffering the insertion failure can never become shorter than the predetermined distance, which in turn means that appearance of the weaving bar due to the weft insertion failure can be positively excluded.

(f) The loom control computer Co also functions as a forced-stop clearing command means for issuing a command to clear or reset the forced stop command for advancing the timing at which the terry motion motor 28 is to be stopped. When the loom control computer Co issues the forced stop clearing command, the terry motion controller C1 functioning as the distance change control means controls the terry motion motor 28 so that the rotation phase of the terry motion motor 28 matches the rotation angle of the loom. By virtue of such position matching process, the distance between the first loosely picked weft Y2 and the cloth fell W1 when the loom is stopped is corrected to the predetermined distance, which is effective for realizing the first pile formation succeeding to the restart of the weaving operation.

Embodiment 5

[0069] Next, a fifth embodiment of the present invention will be described by reference to Fig. 14 in which components the same as or equivalent to those described hereinbefore are denoted by like reference characters, and repeated description thereof is omitted.

[0070] In Fig. 14, reference numeral 61 denotes a feeding rapier head adapted to be inserted into a shedding formed by warps from a weft insertion starting side, and numeral 62 denotes a receiving rapier head adapted to be inserted into the shedding from a weft insertion terminal side. The rapier heads 61 and 62 are fixedly secured to rapier bands 63 and 64 at tip end portions thereof, respectively. The rapier bands 63 and 64 are wound respectively around sprocket wheels 65 and 66, which are rotated reciprocatively in directions opposite to each other. More specifically, the feeding rapier head 61 is inserted into the shedding by rotating the sprocket wheel 65 in the forward direction while the feeding rapier head 61 is retracted or withdrawn from the shedding when the sprocket wheel 65 rotates in the backward direction. Similarly, the receiving rapier head 62 is inserted into the shedding upon forward rotation of the sprocket wheel 66 while being retracted from the shedding when the sprocket wheel 66 rotates in the backward direction.

[0071] A sley 47 is supported on the rocking shaft 48. The sley 47 is designed to rotate around the rocking shaft 48 together with it. A driving shaft 49 is rotatably mounted immediately beneath the rocking shaft 48. The driving shaft 49 is adapted to be driven by a beating motor 50.

[0072] Double cams 51 and 52 are fixedly mounted on the driving shaft 49 at both end portions thereof, respectively, while double cam levers 53 and 54 are secured to the rocking shaft 48 at both end portions thereof, respectively. Rotating motion of the driving shaft 49 is translated into reciprocative motion of the rocking shaft 48 by means of a positive cam mechanism constituted by the double cams 51 and 52 through cooperation with the double cam levers 53 and 54. Upon reciprocative angular displacement of the rocking shaft 48, the sley 47 is caused to swing reciprocatively, i.e., forwardly and backwardly, whereby beating operation by the read 60 is realized.

[0073] Further, three-dimensional crank mechanisms 55 and 56 are disposed at both ends of the driving shaft 49, respectively. Rotation of the driving shaft 49 is translated into reciprocative rotations of the sprocket wheels 65 and 66 through the medium of the three-dimensional crank mechanisms 55 and 56, respectively.

[0074] The reciprocative rotation of the sprocket wheels 65 and 66 are transmitted to the rapier bands 63 and 64, respectively, whereby the rapier bands 63 and 64 are caused to move reciprocatively, respectively. Owing to the reciprocative motions of the rapier bands 63 and 64, the rapier heads 61 and 62 are caused to travel into and from the shedding, respectively. The three-dimensional crank mechanisms 55 and 56 are implemented symmetrically to each other with reference to a vertical center line of the loom, as viewed in Fig. 14. The sprocket wheels 65 and 66 which are disposed at left- and right-hand sides of the loom, as viewed in Fig. 14, are caused torotate in the directions reverse to each other. Thus, both the rapier heads 61 and 62 can move into the shedding synchronously with each other to meet at a center position, as viewed in the direction widthwise of the fabric. Thereafter, the rapier heads 61 and 62 are retracted from the shedding. The weft Y inserted into and carried through the shedding by means of the feeding rapier

head 61 is transferred to the receiving rapier head 62. The receiving rapier head 62 is then retracted from the shedding, whereby the weft Y can extend through the shedding completely.

[0075] The beating motor 50 constituting the distance change means is subjected to the control of a beating control unit 57 which constitutes or serves as the distance change control means. More specifically, the beating control unit 57 controls the beating motor 50 on the basis of the loom rotation angle information derived from the output of the rotary encoder 39 so that the synchronization is established for the beating operation. Further, the beating control unit 57 performs feedback control of the beating motor 50 on the basis of the rotation angle information derived from the output of a rotary encoder 501 which is incorporated in the beating motor 50.

[0076] Upon occurrence of insertion failure in the second loosely picked weft, the loom control computer Co issues a forced stop command signal to the beating control unit 57 which responds to that signal by forcibly stopping the beating motor 50. Owing to this forced stoppage of the beating motor 50, the distance between the cloth fell W1 and the first loosely picked weft preceding to the second loosely picked weft suffering the insertion failure is prevented from becoming shorter than the predetermined distance. Thus, the formation of a weaving bar representing a defective pile formation which is ascribable to decreasing of the distance between the first loosely picked weft and the cloth fell W1 below a predetermined distance can be satisfactorily avoided.

[0077] Many features and advantages of the present invention are apparent from the detailed description and thus it is intended by the appended claims to cover all such features and advantages of the system which fall within the true spirit and scope of the invention. Further, since numerous modifications and combinations will readily occur to those skilled in the art, it is not intended to limit the invention to the exact construction and operation illustrated and described.

[0078] By way of example, the weft identifying apparatus for the pile fabric weaving according to the present invention may also be modified as mentioned below.

(1) In the weft insertion control apparatus for the pile fabric weaving machine according to the first embodiment of the invention, the weaving pattern request signal and the weft sequence request signal may be output simultaneously with the weaving pattern command information and the weft sequence information being equally output simultaneously.

(2) The weaving pattern request signal and the weft sequence request signal may be omitted, wherein the weaving pattern command information and the weft sequence information are output at a time point corresponding to a predetermined rotation angle of the loom.

(3) The weft identification control program may be executed by the terry motion controller C1 in place of the loom control computer Co.

(4) The weft identification control program may be executed by the weaving pattern setting unit 35 in place of the loom control computer Co.

(5) The controller of the weft disposal unit designed for removing the weft suffering the insertion failure may be implemented by the operation control means. It is preferred that the weft disposal unit remains unactuated when insertion failure or error occurs in the fast picked weft. To this end, the wefts in the pile pattern weaving operation must be identified.

(6) Determination of a weft information generation error may be made on the basis of the current weaving pattern information and the succeeding weaving pattern information or alternatively on the basis of the succeeding weaving pattern information and the next succeeding weaving pattern information.

(7) The concept of the present invention can equally be applied to a pile fabric weaving machine equipped with two servo motors, as disclosed in Japanese Patent Application Laid-open No. 133549/1995 (JP-A-7-133549).

(8) Similarly, the present invention can find application in a pile fabric weaving machine in which the beating position can be changed.

[0079] Accordingly, all suitable modifications and equivalents may be resorted to, falling within the scope of the invention.

Claims

1. A weft insertion control apparatus for a loom suitable for weaving pile fabric and including distance changing means (28) for changing a relative distance between a beating position of a reed (15) and a cloth fell (W1) of woven fabric (W) so as to form piles, said weft insertion control apparatus comprising

operation control means (C1) for controlling weaving operation of said loom;
weft identifying means for identifying wefts destined for forming each unitary pile, including control means (Co) for executing a weft identification control program;

weaving pattern setting means (35) associated to said weft identifying means and incorporating storage means (41) for storing weft sequence information (n) concerning said wefts for forming the respective unitary pile, and weaving pattern information (G1(N), n); and
transmission command means (Co, 39) for issuing a command for transmission of said weft sequence information (n) stored in said storage means (41);

wherein said weaving pattern setting means (35) is connected to receive said transmission command issued by said transmission command means (Co, 39) to thereby transmit said weft sequence information (n) to said operation control means (C1) for controlling weaving operation on the basis of said weft sequence information (n).

2. A weft insertion control apparatus according to claim 1, further comprising

rotation angle detecting means (39) for detecting a rotational angle (θ) of rotational means of said loom;

wherein said transmission command means (Co, 39) issues the command for transmitting said weft sequence information (n) to said operation control means (C1) at an instant when said rotational angle detecting means (39) detects a predetermined rotational angle (θo).

3. A weft insertion control apparatus according to claim 1 or 2, further comprising weft information generation error detecting means (43) for detecting error in generation of weaving pattern information.

4. A weft insertion control apparatus according to any of the preceding claims, further comprising

shedding load state detecting means (37) provided in association with said waving pattern setting means (35) for detecting a shedding load state upon stopping of a weaving operation; and
braking control factor storage means (36) provided in association with said operation control means (C1) for storing braking control factors for changing timing for stopping of a loom driving motor (Mo) in accordance with a detected shedding load state.

5. A weft insertion control apparatus according to any of the preceding claims, wherein said distance changing means (28) are controlled by said operation control means (C1) so that a distance between a first loosely picked weft (Y2) forming a part of a unitary pile (P) and the cloth fell (W1) is increased beyond a distance set for loose pick operation when a weft inserted immediately before the loom is stopped is identified as a fast picked weft (Y1) on the basis of the information transferred from said weaving pattern setting means (35).

6. A weft insertion control apparatus according to claim 5, wherein said operation control means (C1) is provided such that when a weft inserted immediately before the loom is stopped is identified as a fast picked weft (Y1) on the basis of the information transferred from said weaving pattern setting means (35), said operation control means (C1) advances timing for stopping operation of said distance changing means (28) relative to said stop timing in insertion of the wefts of the unitary pile (P) other than said fast picked weft (Y1).

Patentansprüche

1. Schusseintrags-Steuervorrichtung für eine Webmaschine, die zum Weben von Tuchgewebe geeignet ist und eine Abstandsänderungseinrichtung (28) zum Ändern eines relativen Abstands zwischen einer Schlagposition eines Kamms bzw. Webeblatts (15) und einem Gewebesaum (W1) eines gewebten Stoffs (W) enthält, um Flore zu bilden, wobei die Schusseintrags-Steuervorrichtung folgendes aufweist:

eine Operations-Steuereinrichtung (C1) zum Steuern einer Weboperation der Webmaschine;
eine Schusseintrags-Identifizierungseinrichtung zum Identifizieren von Schusseinträgen, die zum Bilden eines jeweiligen einzigartigen Flors bestimmt sind, einschließlich einer Steuereinrichtung (Co) zum Ausführen eines Schusseintrags-Identifizierungssteuerprogramms;
eine Webmuster-Einstelleinrichtung (35), die der Schusseintrags-Identifizierungseinrichtung zugeordnet ist und eine Speichereinrichtung (41) zum Speichern von Schusseintrags-Sequenzinformationen (n) in Bezug auf die Schusseinträge zum Bilden des jeweiligen einzigartigen Flors und von Webmusterinformationen (G1 (N), n) enthält; und
eine Sendebefehlseinrichtung (Co, 39) zum Ausgeben eines Befehls zum Senden der in der Speichereinrich-

tung (41) gespeicherten Schusseintrags-Sequenzinformationen (n);

wobei die Webmuster-Einstelleinrichtung (35) angeschlossen ist, um den durch die Sendebefehlseinrichtung (Co, 39) ausgegebenen Sendebefehl zu empfangen, um dadurch die Schusseintrags-Sequenzinformationen (n) zur Operations-Steuereinrichtung (C1) zum Steuern einer Weboperation auf der Basis der Schusseintrags-Sequenzinformationen (n) zu senden.

2. Schusseintrags-Einfügesteuervorrichtung nach Anspruch 1, die weiterhin folgendes aufweist:

eine Drehwinkel-Erfassungseinrichtung (39) zum Erfassen eines Drehwinkels (θ) einer Dreheinrichtung der Webmaschine;

wobei die Sendebefehlseinrichtung (Co, 39) den Befehl zum Senden der Schusseintrags-Sequenzinformation (n) zur Operations-Steuereinrichtung (C1) zu einem Zeitpunkt ausgibt, zu welchem die Drehwinkel-Erfassungseinrichtung (39) einen vorbestimmten Drehwinkel (θo) erfasst.

3. Schusseintrags-Einfügesteuervorrichtung nach Anspruch 1 oder 2, die weiterhin eine Schusseintrags-Informationserzeugungs-Fehlererfassungseinrichtung (43) zum Erfassen eines Fehlers bei einer Erzeugung von Webmusterinformationen aufweist.

4. Schusseintrags-Einfügesteuervorrichtung nach einem der vorangehenden Ansprüche, die weiterhin folgendes aufweist:

eine Fachbildelastzustands-Erfassungseinrichtung (37), die in Verbindung mit der Webmuster-Einstelleinrichtung (35) vorgesehen ist, zum Erfassen eines Fachbildelastzustands bei einem Stoppen einer Weboperation; und
eine Bremssteuerfaktor-Speichereinrichtung (36), die in Verbindung mit der Operations-Steuereinrichtung (C1) vorgesehen ist, zum Speichern von Bremssteuerfaktoren zum Ändern einer Zeitgabe zum Stoppen eines Webmaschinen-Antiebsmotors (Mo) gemäß einem erfassten Fachbildelastzustand.

5. Schusseintrags-Einfügesteuervorrichtung nach einem der vorangehenden Ansprüche, wobei die Abstandsänderungseinrichtung (28) durch die Operations-Steuereinrichtung (C1) so gesteuert wird, dass ein Abstand zwischen einem ersten lose eingeschossenen Schusseintrag (Y2), der einen Teil eines einzigartigen Flors (P) bildet, und dem Gewebesaum (W1) über einen Abstand hinausgehend erhöht wird, der für eine lose Einschussoperation eingestellt ist, wenn ein Schusseintrag, der eingefügt wird, direkt bevor die Webmaschine gestoppt wird, als schnell eingeschossener Schusseintrag (Y1) identifiziert wird, und zwar auf der Basis der Informationen, die von der Webmuster-Einstelleinrichtung (35) übertragen werden.

6. Schusseintrags-Einfügesteuervorrichtung nach Anspruch 5, wobei die Operations-Steuereinrichtung (C1) so vorgesehen ist, dass dann, wenn ein Schusseintrag, der eingefügt ist, direkt bevor die Webmaschine gestoppt wird, auf der Basis der Informationen, die von der Webmuster-Einstelleinrichtung (35) übertragen werden, als schnell eingeschossener Schusseintrag (Y1) identifiziert wird, die Operations-Steuereinrichtung (C1) eine Zeitgabe zum Stoppen einer Operation der Abstandsänderungseinrichtung (28) relativ zu der Stoppzeitgabe bei einer Einfügung der Schusseinträge des einzigartigen Flors (P) fortschaltet, die andere als der schnell eingeschossene Schusseintrag (Y1) sind.

Revendications

1. Dispositif de commande d'insertion de trames destiné à un métier convenant pour le tissage d'un tissu à poils et comprenant un moyen de modification de distance (28) destiné à modifier une distance relative entre une position de tassement d'un peigne (15) et une ligne de serrage de duite (W1) de l'étoffe tissée (W) de façon à former des velours, ledit dispositif de commande d'insertion de trames comprenant

un moyen de commande de mise en oeuvre (C1) destiné à commander la mise en oeuvre du tissage dudit métier,
un moyen d'identification de trames destiné à identifier les trames destinées à la formation de chaque velours unitaire comprenant un moyen de commande (Co) destiné à exécuter un programme de commande d'identi-

fication de trames,
un moyen d'établissement de motif de tissage (35) associé audit moyen d'identification de trames et incorporant un moyen de mémorisation (41) destiné à mémoriser les informations de séquence de trames (n) concernant lesdites trames destinées à former le velours unitaire respectif et les informations de motif de tissage (G1(N), n), et
un moyen d'instruction de transmission (Co. 39) destiné à délivrer une instruction pour la transmission desdites informations de séquence de trames (n) mémorisé dans ledit moyen de mémorisation (41),

dans lequel ledit moyen d'établissement de motif de tissage (35) est relié en vue de recevoir ladite instruction de transmission délivrée par ledit moyen d'instruction de transmission (Co, 39) pour transmettre ainsi lesdites informations de séquence de trames (n) audit moyen de commande de mise en oeuvre (C1) destiné à commander la mise en oeuvre du tissage sur la base desdites informations de séquence de trames (n).

2. Dispositif de commande d'insertion de trames selon la revendication 1, comprenant en outre

un moyen de détection d'angle de rotation (39) destiné à détecter un angle de rotation (θ) du moyen de rotation dudit métier,

dans lequel ledit moyen d'instruction de transmission (Co, 39) délivre l'instruction pour la transmission desdites informations de séquence de trames (n) audit moyen de commande de mine en oeuvre (C1) à un instant où ledit moyen de détection d'angle de rotation (39) détecte un angle de rotation prédéterminé (θo).

3. Dispositif de commande d'insertion de trames selon la revendication 1 ou 2, comprenant en outre un moyen de détection d'erreur de génération d'informations de trames (43) destiné à détecter une erreur dans la génération des informations de motif de tissage.

4. Dispositif de commande d'insertion de trames selon l'une quelconque des revendications précédentes, comprenant en outre

un moyen de détection d'état de charge de formation du pas (37) prévu en association avec ledit moyen d'établissement de motif de tissage (35) en vue de détecter un état de charge de formation du pas lors de l'arrêt d'une opération de tissage. et
un moyen de mémorisation de facteur de commande de freinage (36) prévu en association avec ledit moyen de commande de mise en oeuvre (C1) en vue de mémoriser des facteurs de commande de freinage destinés à modifier l'instant d'arrêt d'un moteur d'entraînement de métier (Mo) conformément à un état de charge de formation du pas détecté.

5. Dispositif de commande d'insertion de trames selon l'une quelconques des revendications précédentes, dans lequel ledit moyen de modification de distance (28) est commandé par ledit moyen de commande de mise en oeuvre (C1) de sorte qu'une distance entre une première trame lancée de façon lâche (Y2) faisant partie d'un velours unitaire (P) et la ligne de serrage de duite (W1) est augmentée au-delà d'une distance réglée pour un fonctionnement de lancement lâche lorsqu'une trame insérée immédiatement avant que le métier ne soit arrêté est identifié comme étant une trame lancée rapidement (Y1) sur la base des informations transférées depuis ledit moyen d'établissement de motif de tissage (35).

6. Dispositif de commande d'insertion de trames selon la revendication 5, dans lequel ledit mayen de commande de mise en oeuvre (C1) est prévu de sorte que lorsqu'une trame insérée immédiatement avant que le métier ne soit arrêté est identifiée comme étant une trame lancée rapidement (Y1) sur la base des informations transférées depuis ledit moyen d'établissement de motif de trame (35), ledit moyen de commande de mise en oeuvre (C1) avance l'instant de l'arrêt du fonctionnement dudit moyen de modification de distance (28) par rapport audit instant d'arrêt de l'insertion des trames du velours unitaire (P) autre que ladite trame lancée rapidement (Y1).

FIG. 1

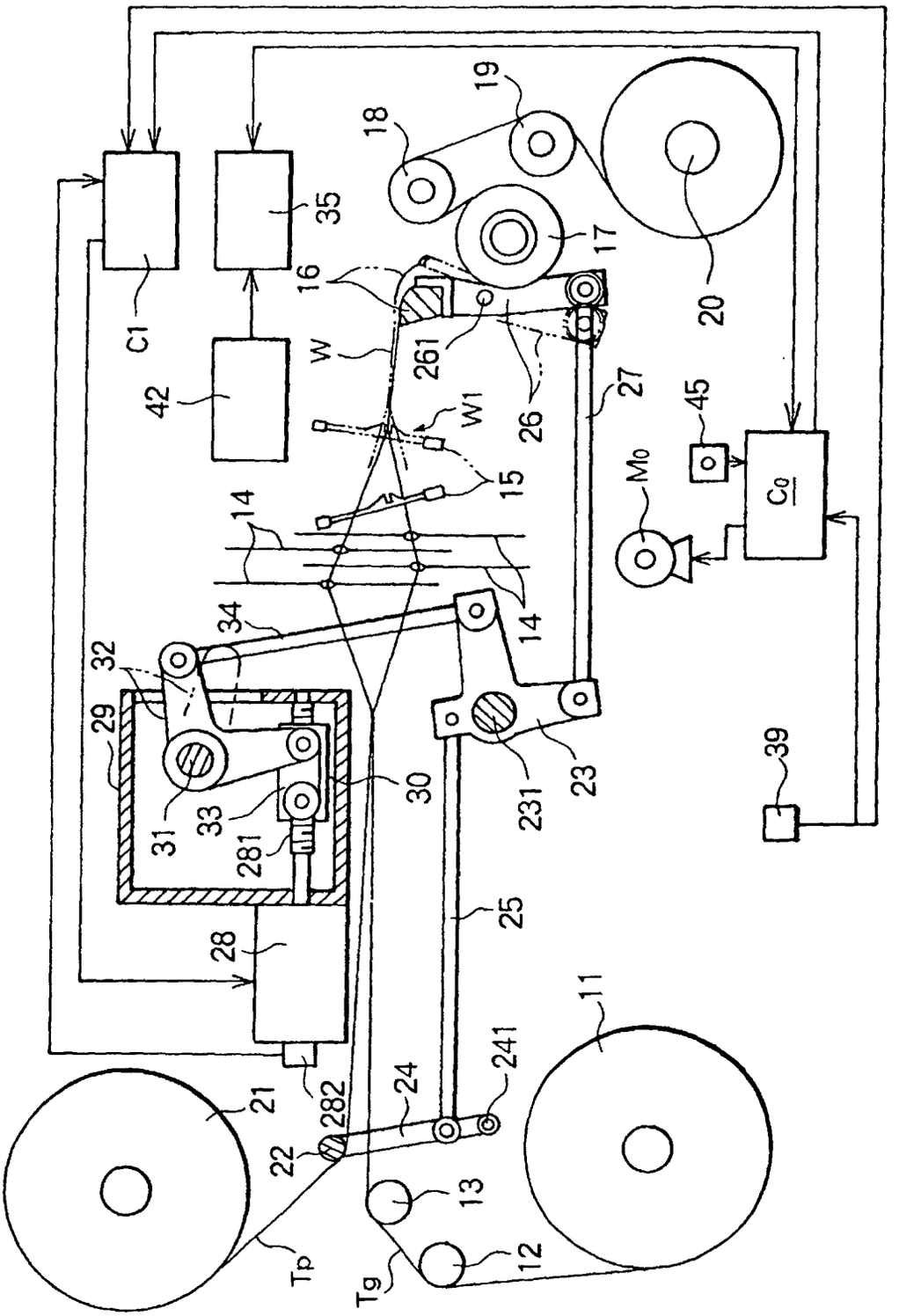
C1
35
42
16
W
261
W1
15
14
14
34
32
29
31
33
281
30
28
282
21
22
24
241
13
12
Tp
Tg
11
25
231
23
39
M0
C0
45
27
26
17
18
19
20

FIG. 2

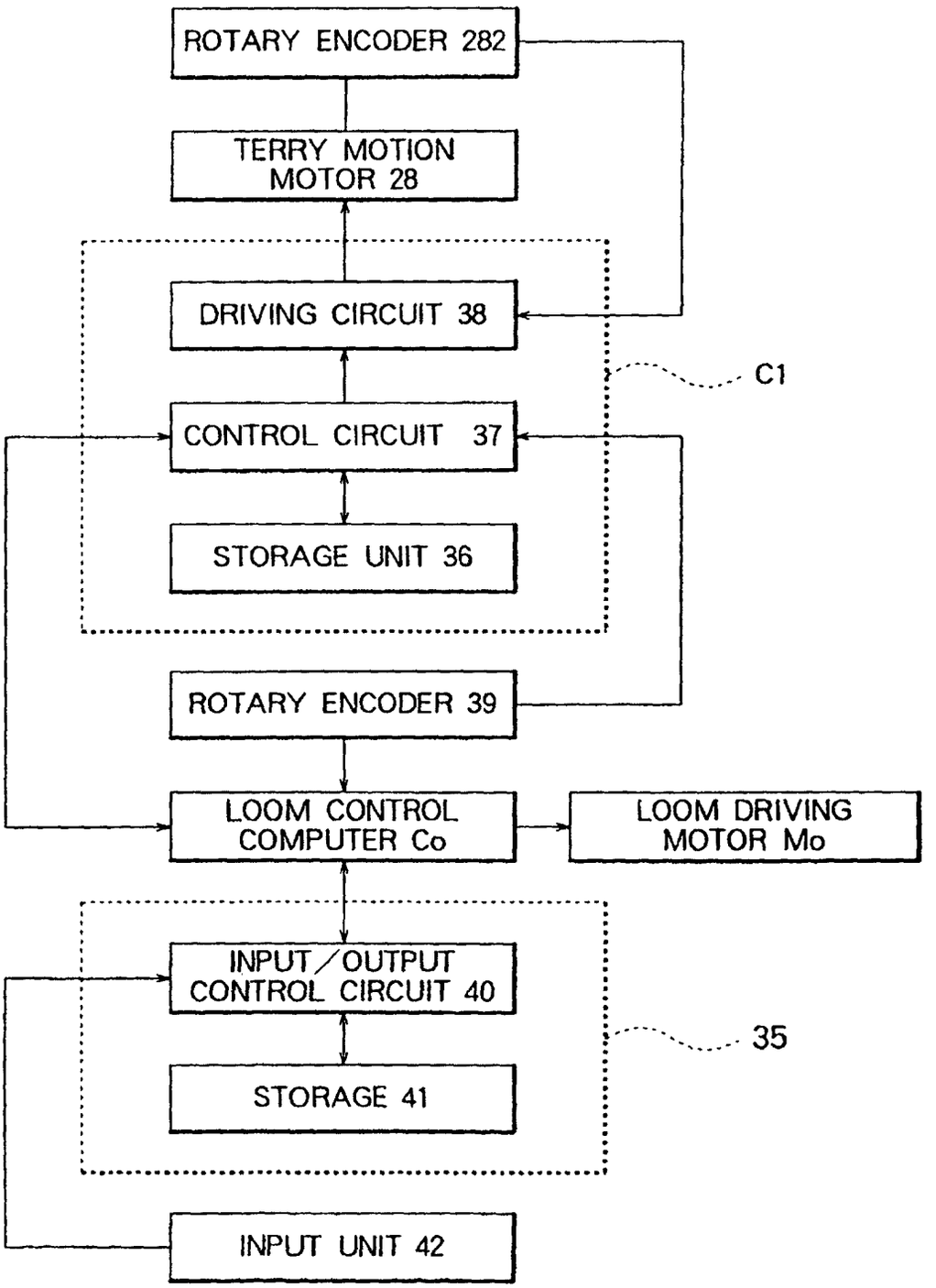
ROTARY ENCODER 282
TERRY MOTION MOTOR 28
DRIVING CIRCUIT 38
C1
CONTROL CIRCUIT 37
STORAGE UNIT 36
ROTARY ENCODER 39
LOOM CONTROL COMPUTER Co
LOOM DRIVING MOTOR Mo
INPUT/OUTPUT CONTROL CIRCUIT 40
35
STORAGE 41
INPUT UNIT 42

FIG. 3

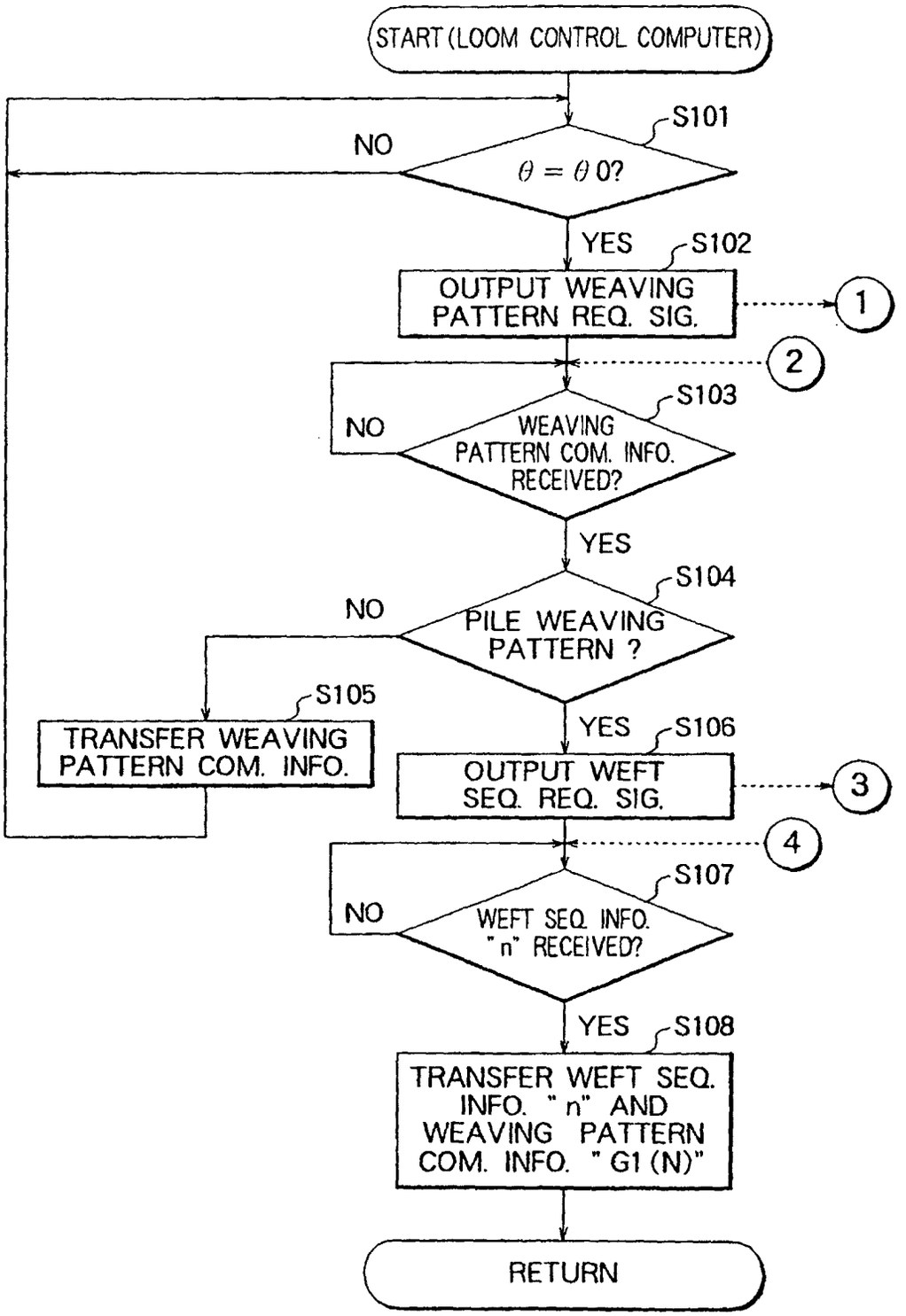
START (LOOM CONTROL COMPUTER)
S101
NO
θ = θ 0?
YES
S102
OUTPUT WEAVING PATTERN REQ. SIG.
1
2
S103
NO
WEAVING PATTERN COM. INFO. RECEIVED?
YES
S104
NO
PILE WEAVING PATTERN ?
S105
TRANSFER WEAVING PATTERN COM. INFO.
YES
S106
OUTPUT WEFT SEQ. REQ. SIG.
3
4
S107
NO
WEFT SEQ. INFO. "n" RECEIVED?
YES
S108
TRANSFER WEFT SEQ. INFO. "n" AND WEAVING PATTERN COM. INFO. "G1 (N)"
RETURN

FIG. 4

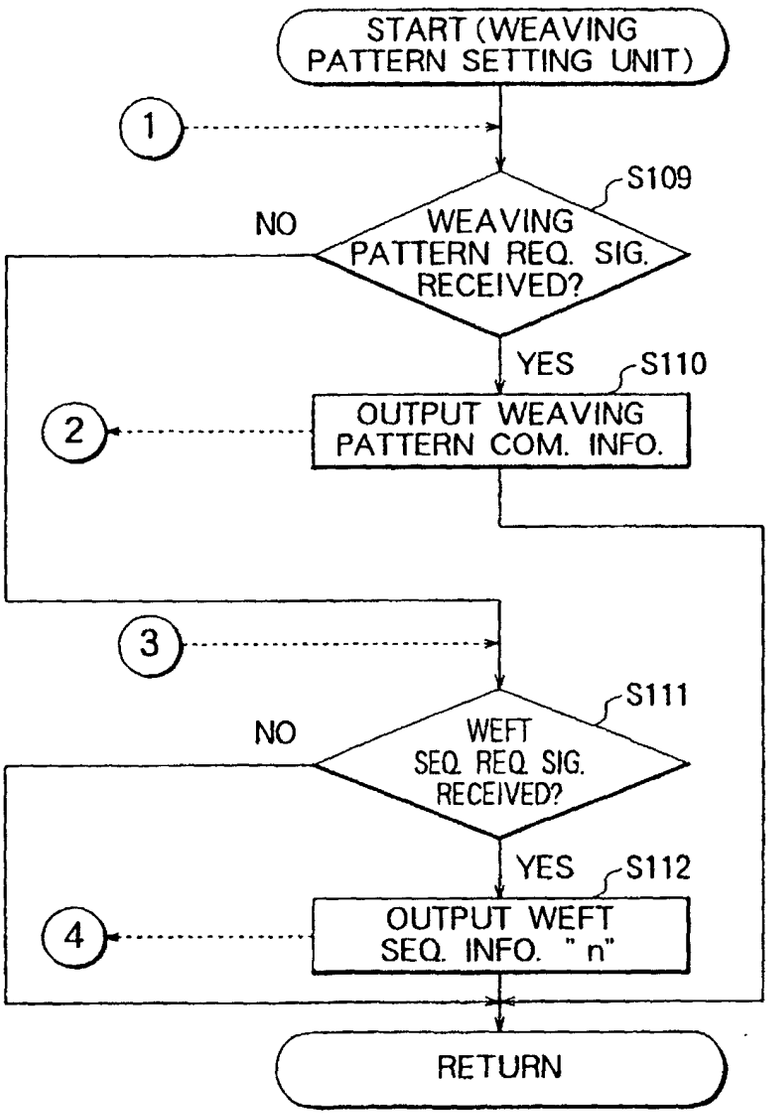
START (WEAVING PATTERN SETTING UNIT)
1
S109
NO
WEAVING PATTERN REQ. SIG. RECEIVED?
YES
S110
2
OUTPUT WEAVING PATTERN COM. INFO.
3
S111
NO
WEFT SEQ. REQ. SIG. RECEIVED?
YES
S112
4
OUTPUT WEFT SEQ. INFO. " n"
RETURN

FIG. 5

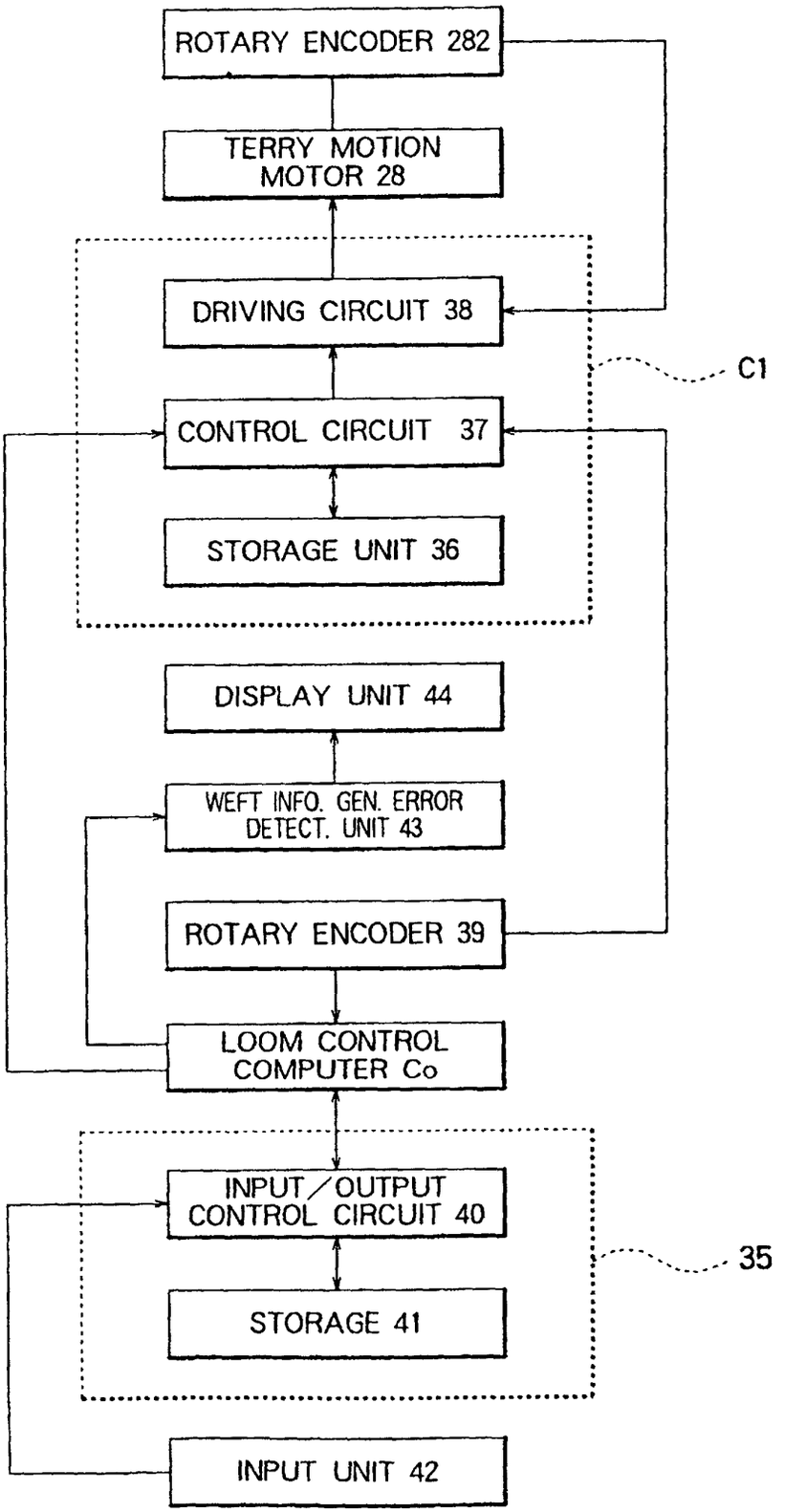
ROTARY ENCODER 282
TERRY MOTION MOTOR 28
DRIVING CIRCUIT 38
C1
CONTROL CIRCUIT 37
STORAGE UNIT 36
DISPLAY UNIT 44
WEFT INFO. GEN. ERROR DETECT. UNIT 43
ROTARY ENCODER 39
LOOM CONTROL COMPUTER Co
INPUT/OUTPUT CONTROL CIRCUIT 40
35
STORAGE 41
INPUT UNIT 42

FIG. 6

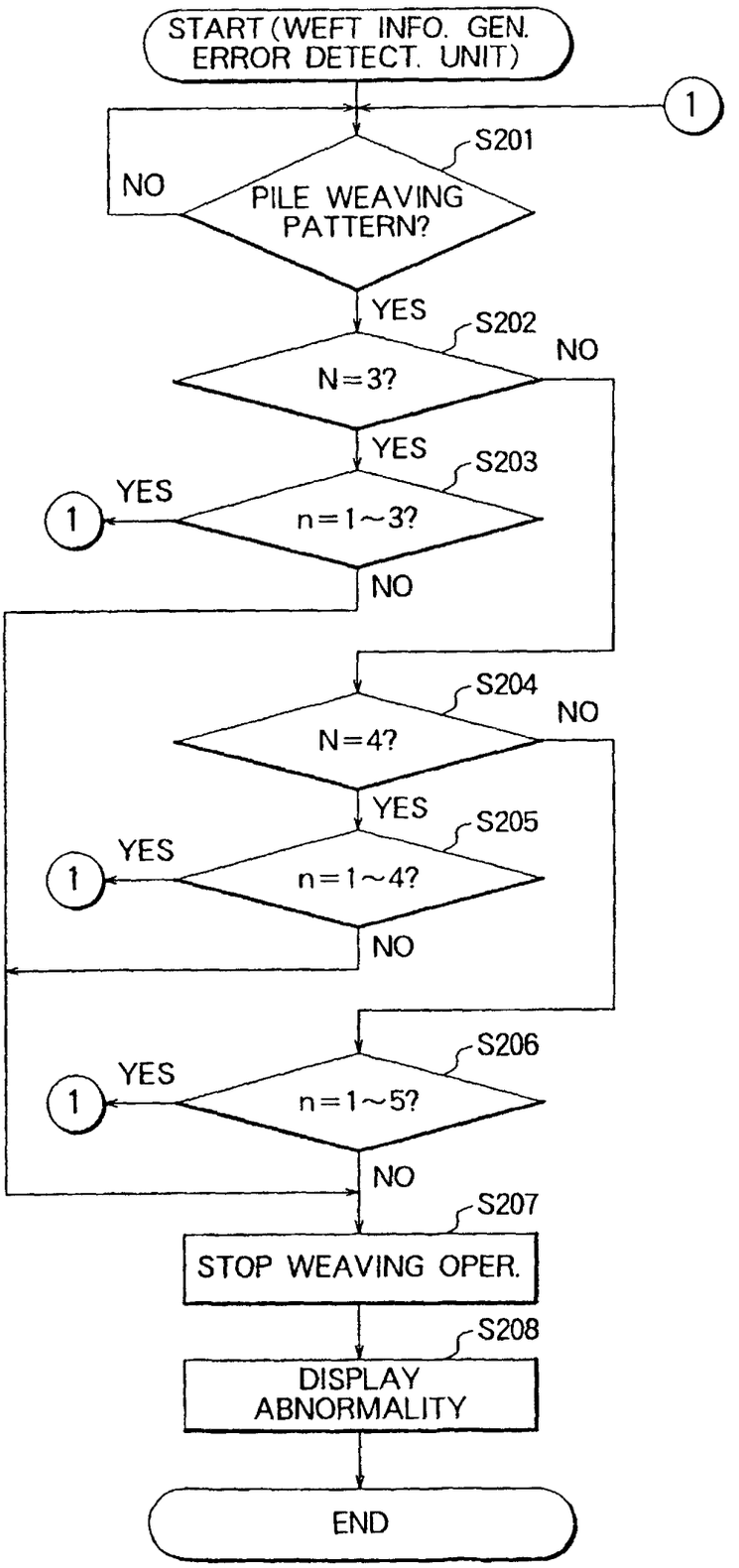
START (WEFT INFO. GEN. ERROR DETECT. UNIT)
1
S201
PILE WEAVING PATTERN?
NO
YES
S202
N=3?
NO
YES
S203
n=1~3?
YES
1
NO
S204
N=4?
NO
YES
S205
n=1~4?
YES
1
NO
S206
n=1~5?
YES
1
NO
S207
STOP WEAVING OPER.
S208
DISPLAY ABNORMALITY
END

FIG. 7

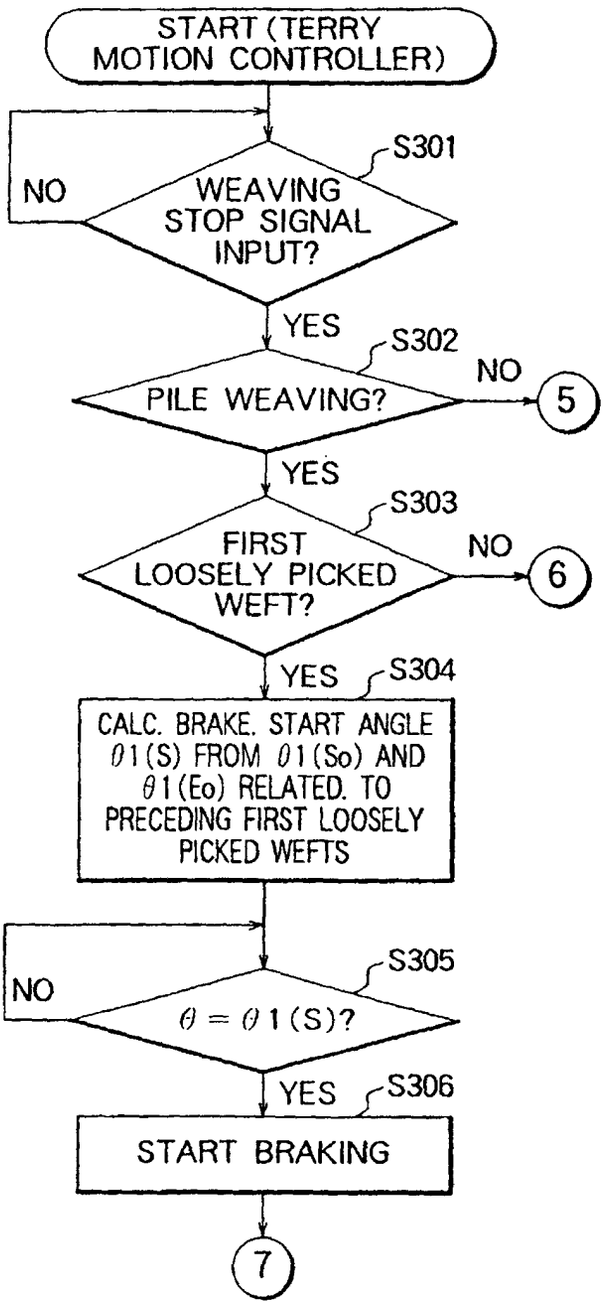
START (TERRY MOTION CONTROLLER)
S301
WEAVING STOP SIGNAL INPUT?
NO
YES
S302
PILE WEAVING?
NO
5
YES
S303
FIRST LOOSELY PICKED WEFT?
NO
6
YES
S304
CALC. BRAKE. START ANGLE θ1(S) FROM θ1(So) AND θ1(Eo) RELATED. TO PRECEDING FIRST LOOSELY PICKED WEFTS
S305
NO
θ = θ1(S)?
YES
S306
START BRAKING
7

FIG. 8

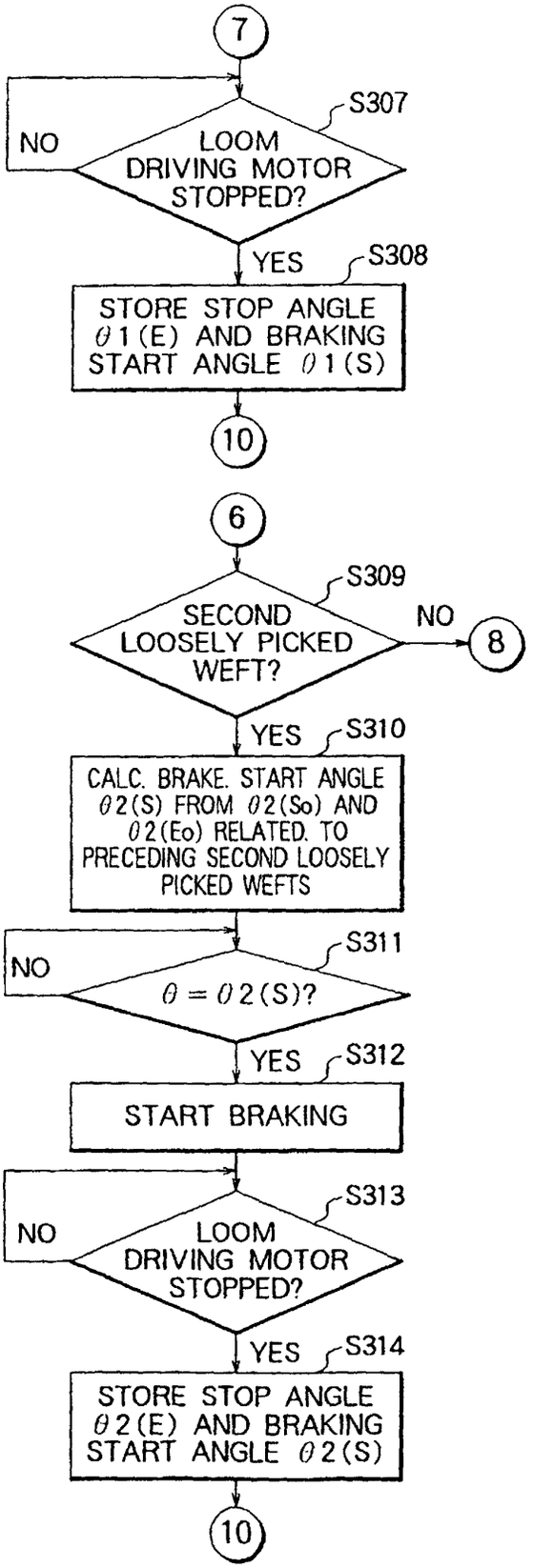
7
S307
NO
LOOM DRIVING MOTOR STOPPED?
YES
S308
STORE STOP ANGLE θ1(E) AND BRAKING START ANGLE θ1(S)
10
6
S309
SECOND LOOSELY PICKED WEFT?
NO
8
YES
S310
CALC. BRAKE. START ANGLE θ2(S) FROM θ2(So) AND θ2(Eo) RELATED TO PRECEDING SECOND LOOSELY PICKED WEFTS
NO
S311
θ = θ2(S)?
YES
S312
START BRAKING
NO
S313
LOOM DRIVING MOTOR STOPPED?
YES
S314
STORE STOP ANGLE θ2(E) AND BRAKING START ANGLE θ2(S)
10

FIG. 9

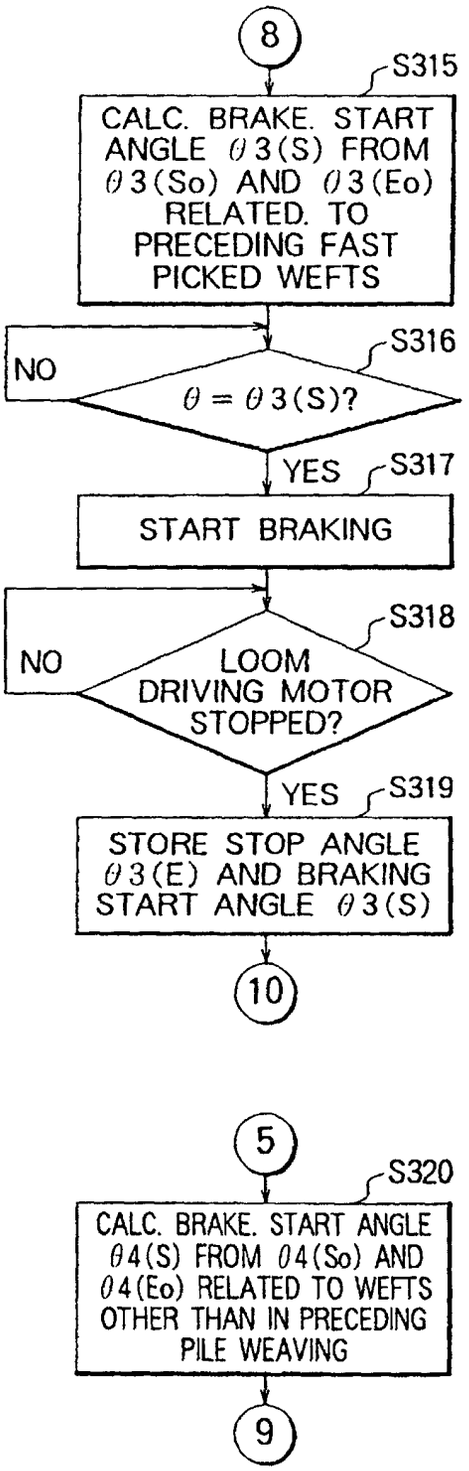
8
S315
CALC. BRAKE. START ANGLE θ3(S) FROM θ3(So) AND θ3(Eo) RELATED. TO PRECEDING FAST PICKED WEFTS
S316
NO
θ = θ3(S)?
YES
S317
START BRAKING
S318
NO
LOOM DRIVING MOTOR STOPPED?
YES
S319
STORE STOP ANGLE θ3(E) AND BRAKING START ANGLE θ3(S)
10
5
S320
CALC. BRAKE. START ANGLE θ4(S) FROM θ4(So) AND θ4(Eo) RELATED TO WEFTS OTHER THAN IN PRECEDING PILE WEAVING
9

FIG. 10

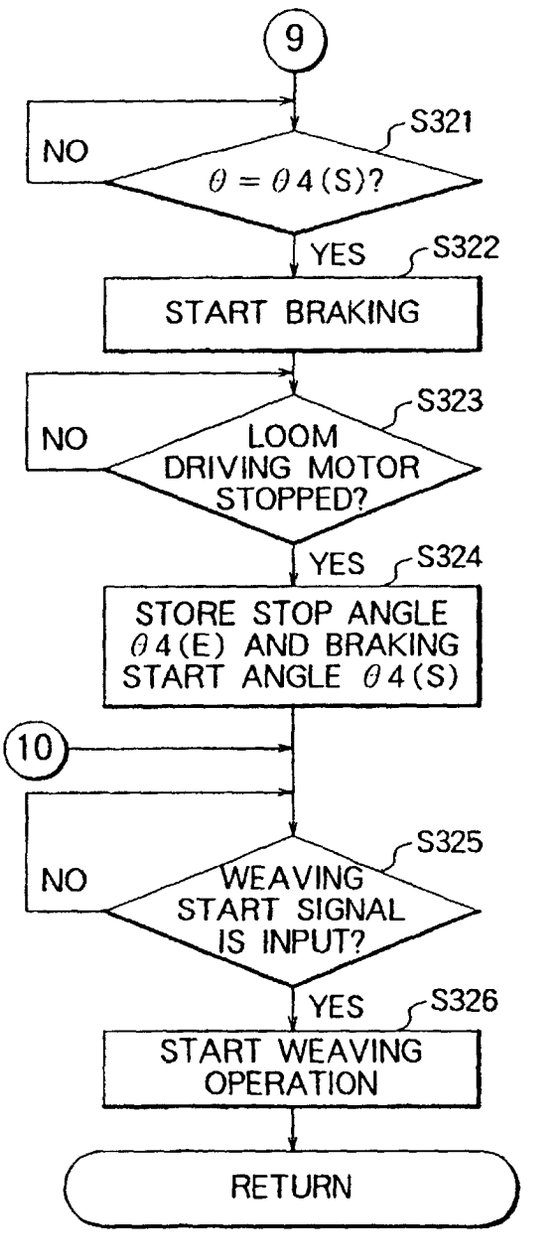
9
S321
NO
θ = θ4(S)?
YES
S322
START BRAKING
S323
NO
LOOM DRIVING MOTOR STOPPED?
YES
S324
STORE STOP ANGLE θ4(E) AND BRAKING START ANGLE θ4(S)
10
S325
NO
WEAVING START SIGNAL IS INPUT?
YES
S326
START WEAVING OPERATION
RETURN

FIG. 11

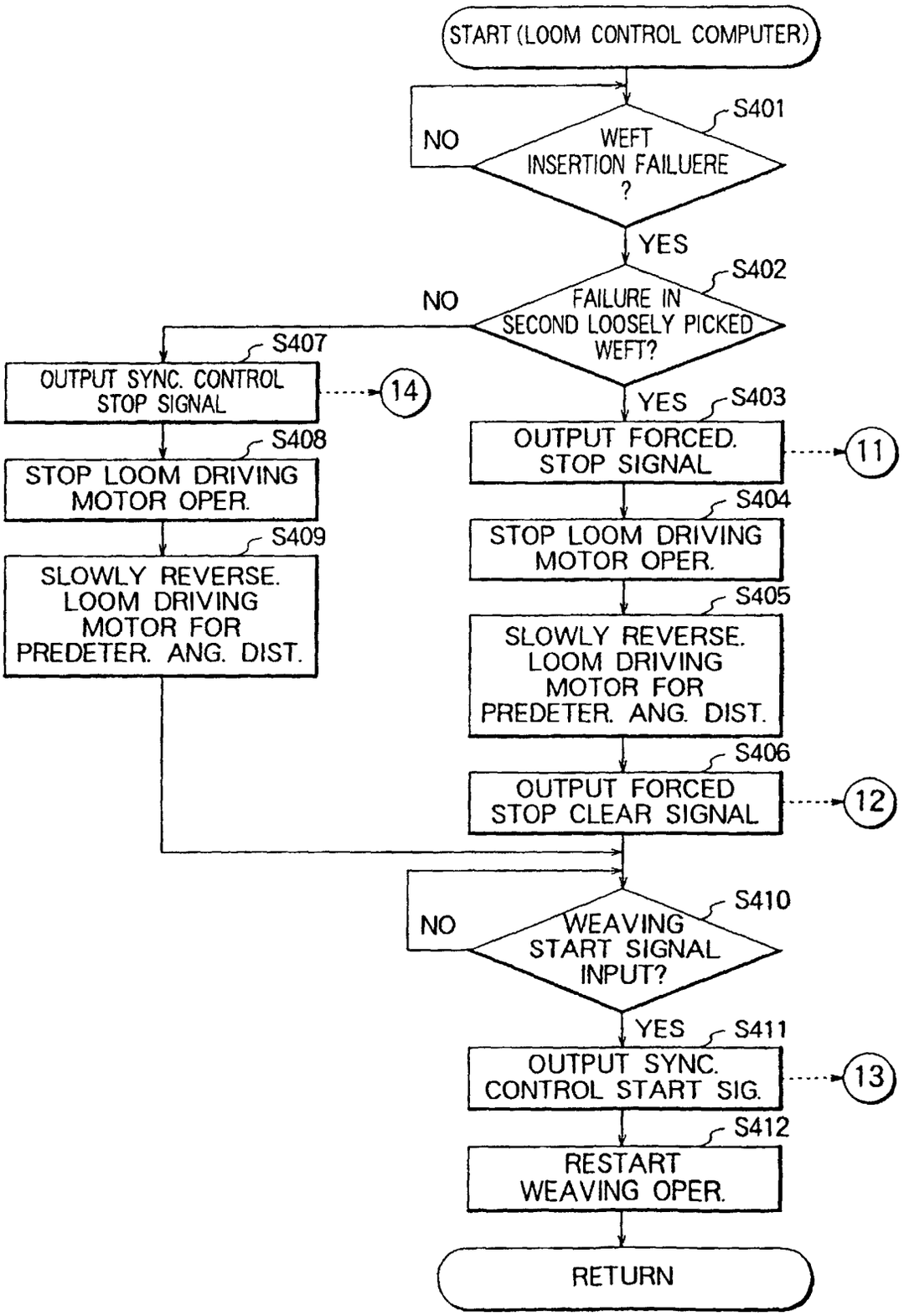
START (LOOM CONTROL COMPUTER)
S401
NO
WEFT INSERTION FAILUERE ?
YES
S402
NO
FAILURE IN SECOND LOOSELY PICKED WEFT?
S407
OUTPUT SYNC. CONTROL STOP SIGNAL
14
S408
STOP LOOM DRIVING MOTOR OPER.
S409
SLOWLY REVERSE. LOOM DRIVING MOTOR FOR PREDETER. ANG. DIST.
YES
S403
OUTPUT FORCED. STOP SIGNAL
11
S404
STOP LOOM DRIVING MOTOR OPER.
S405
SLOWLY REVERSE. LOOM DRIVING MOTOR FOR PREDETER. ANG. DIST.
S406
OUTPUT FORCED STOP CLEAR SIGNAL
12
S410
NO
WEAVING START SIGNAL INPUT?
YES
S411
OUTPUT SYNC. CONTROL START SIG.
13
S412
RESTART WEAVING OPER.
RETURN

FIG. 12

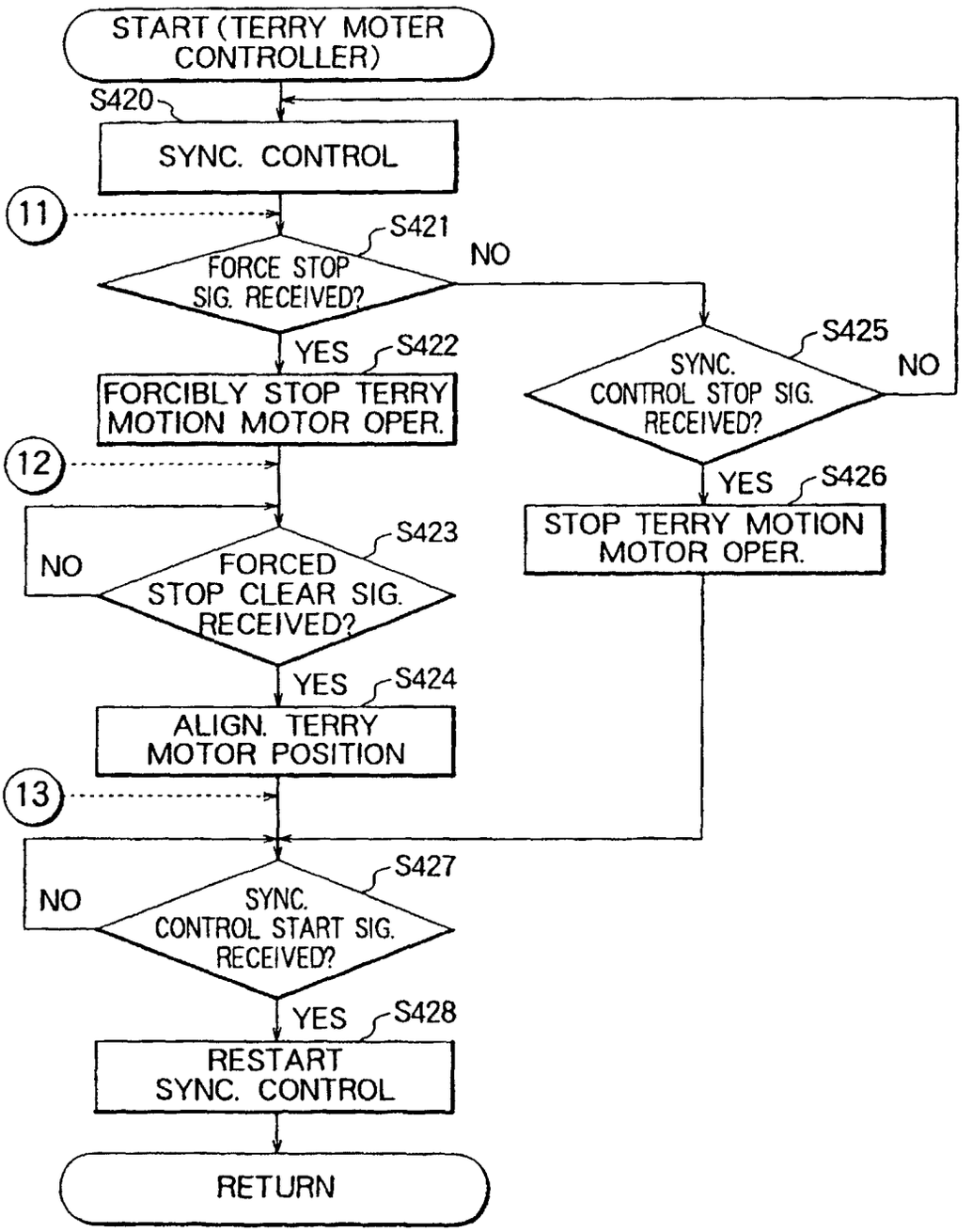
START (TERRY MOTER CONTROLLER)
S420
SYNC. CONTROL
11
S421
FORCE STOP SIG. RECEIVED?
NO
YES
S422
FORCIBLY STOP TERRY MOTION MOTOR OPER.
S425
SYNC. CONTROL STOP SIG. RECEIVED?
NO
YES
S426
STOP TERRY MOTION MOTOR OPER.
12
S423
NO
FORCED STOP CLEAR SIG. RECEIVED?
YES
S424
ALIGN. TERRY MOTOR POSITION
13
S427
NO
SYNC. CONTROL START SIG. RECEIVED?
YES
S428
RESTART SYNC. CONTROL
RETURN

FIG. 13

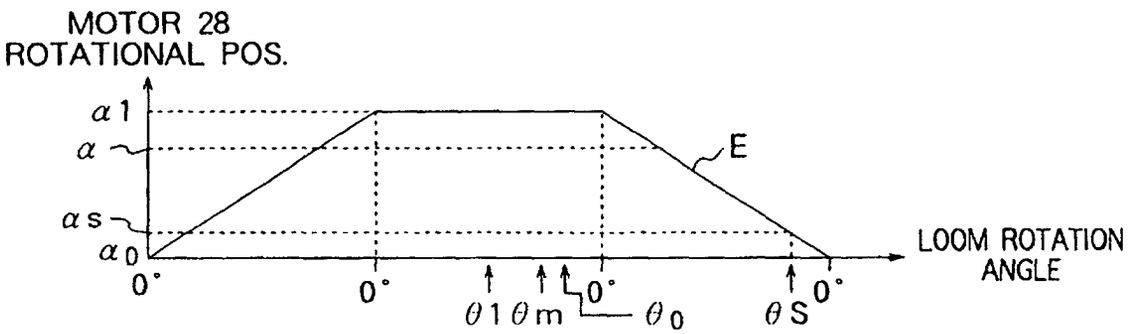
MOTOR 28
ROTATIONAL POS.
α1
α
αs
α0
E
LOOM ROTATION
ANGLE
0°
0°
θ1
θm
0°
θ0
θS
0°

FIG. 14

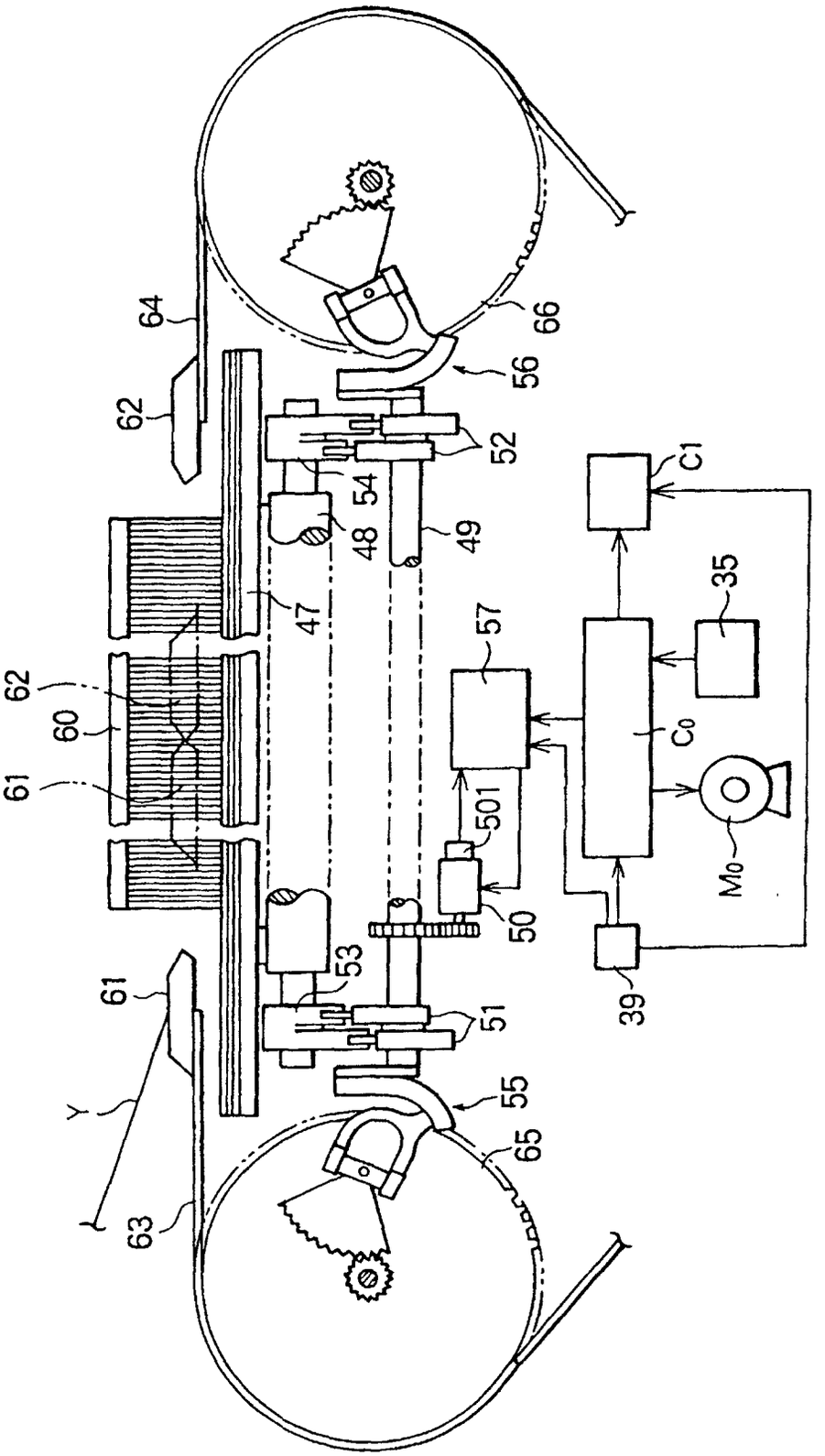
64
62
66
56
52
54
48
49
47
62
60
61
57
35
C1
C0
501
M0
50
39
53
51
61
Y
55
65
63

FIG. 15A

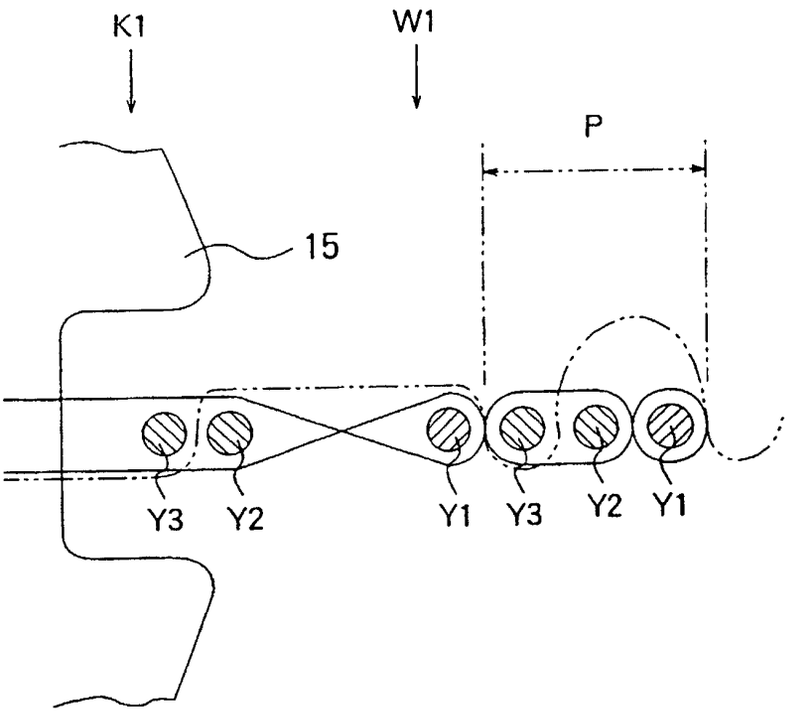

FIG. 15B

