May 5, 1953 C. E. BRAGG 2,637,768

METHOD OF AND APPARATUS FOR MEASURING CONDUCTIVITY OF LIQUIDS

Filed Aug. 30, 1949

Fig. 1

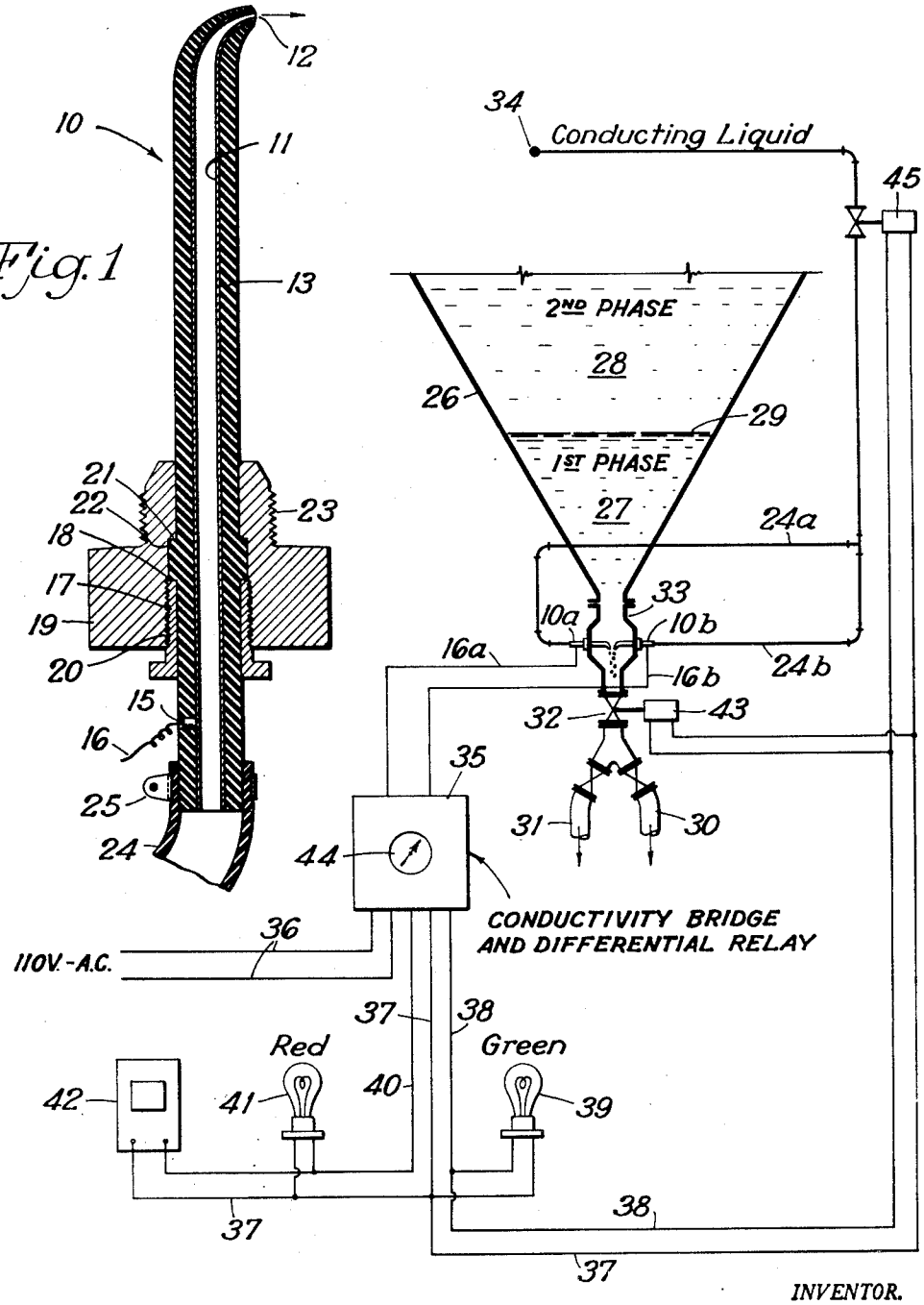

Fig. 2

INVENTOR.

Charles E. Bragg

BY Donald E. Payne

ATTORNEY

Patented May 5, 1953

2,637,768

UNITED STATES PATENT OFFICE

2,637,768

METHOD OF AND APPARATUS FOR MEASURING CONDUCTIVITY OF LIQUIDS

Charles E. Bragg, Chicago, Ill., assignor to Standard Oil Company, Chicago, Ill., a corporation of Indiana

Application August 30, 1949, Serial No. 113,077

8 Claims. (Cl. 175—183)

1

This invention relates to an improved interface indicator, and it pertains more particularly to an improved method and means for utilizing conductivity differences to determine an interface between liquids of different conductivity, particularly when the interface is moving and when at least one of the liquids tends to deposit a coating on electrodes which alters or inhibits their effectiveness.

The invention is applicable to closed systems generally and to interface indicators wherein an interface between immiscible liquid phases moves up or down. It is useful in oil refining operations such as solvent extraction processes wherein it is desired to hold an interface at a predetermined level in an extraction tower or to effect sharp separation between extract and raffinate which are successively withdrawn from a vessel, but it will be described as applied to the problem of detecting the interface between acid sludge and oil when the contents of an acid treating tank are being withdrawn. When conventional conductivity equipment was tested to determine when the interface between acid-sludge and oil passed a certain point, it was found that the electrodes became coated with oil or tarry material to such an extent that it was unreliable. An object of this invention is to provide a method and means for avoiding such difficulties. A further object is to provide an improved conductivity measuring device in which a constantly renewed conducting liquid prevents any coating of metal electrode surfaces and supplements the metal conducting surfaces to form a part of the effective electrode. Other objects will be apparent as the detailed description of the invention proceeds.

In accordance with my invention, at least one of the conductivity electrodes is continuously scrubbed with a conducting liquid in order to prevent the deposition of oil or other material on the metal portion of the electrode surface which would impair or alter its conductivity or resistance per unit area. The electrode is preferably hollow and insulated on its exterior surface and the conducting liquid is passed through the interior of the hollow electrode in order to prevent any extraneous liquid from entering the tip of the electrode. The conductivity measurement may be made between a single electrode and the walls of a vessel, but I prefer to employ two of such electrodes, the discharge ends of which are spaced close to each other, but at a sufficient distance and in such geometric relationship that the conducting liquid which passes through the electrodes does not impinge as a stream against a stream from the other electrode or against ap-

2

paratus walls. When the immiscible liquids are flowing past the electrodes, I prefer to direct the conducting liquids from the electrodes in the direction of immiscible liquid flow, although the conducting liquid streams may be directed in substantially parallel streams in a plane transverse to the direction of immiscible liquid flow. Each effective electrode is formed by the conducting liquid at the discharge end of the hollow metal portion of the electrode, but this conducting liquid functions effectively even when its conductivity is as low as that of ordinary tap water because of the large area over which the conducting liquid contacts the hollow metal portion of the electrode.

Specifically, I have found that when the exterior of an ordinary hypodermic needle is insulated and two of such hypodermic needles are mounted parallel to each other with their tips about an inch apart, the relative conductivity of oil was found to be upwards of three million ohms, and that of acid sludge was found to be approximately 300,000 ohms under the same measuring conditions with ordinary tap water being slowly and continuously passed through the interior of the electrodes. Without the passage of the conducting fluid through the electrodes, the electrode surfaces become clogged or coated and the conductivity of the acid sludge gave an apparent reading which approximated that of the oil; however, in actual service the opposite effect would be more probable since the apparent conductivity of the oil would approximate that of the sludge. The flowing of the conducting liquid through the electrode during its normal course of operation through or across the conducting surface of the electrode was thus shown to be essential for the successful operation of the device.

The invention will be more clearly understood from the following detailed description of a specific example thereof, read in conjunction with the accompanying drawings which form a part of this specification and in which:

Figure 1 is a section view of an electrode assembly, and

Figure 2 is a schematic diagram illustrating the use of the interface indicator in a system for separating acid sludge from oil.

The electrode assembly 10 illustrated in Figure 1 consists essentially of a hollow metal tube 11, the discharge end 12 of which is narrowed to an opening of approximately one square millimeter and curved so that the discharge stream will be at substantially right angles to the main axis of the tube. The exterior of the tube is surrounded by electrical insulation 13 which may be of ce-

ramic material, neoprene, or in fact any electrical insulator which is not deleteriously effected by the liquids with which it comes in contact. The electrode terminal 15 is secured to tube 11 and it extends through the surrounding insulation for connection to lead wire 16.

For positioning the electrode in a wall of a vessel, an externally threaded sleeve 17, which abuts against shoulder 18 on the insulating material, coacts with plug 19, having internal threads 20 and having an annular shoulder 21 coacting with another shoulder 22 on the insulating material. An exterior threaded portion 23 of plug 19 may be screwed into a threaded opening in a vessel or conduit wall.

The inlet end of the electrode is preferably connected to a non-conducting conduit such, for example, as a rubber hose 24 which may be secured to the end of the insulated portion by means of clamp 25.

Referring next to Figure 2, a vessel 26 schematically represents a large tank for treating a hydrocarbon oil with sulfuric acid. After the thorough agitation which is required in the treating step, the aqueous acid sludge phase 27 is allowed to separate from the oil phase which rises to the top and which is separated from the aqueous acid phase by interface 29. In refinery operations it is desired to withdraw liquid from the base of vessel 26 at a relatively rapid rate to discharge the acid sludge through line 30 to a sludge disposal system and to withdraw the treated oil through line 31 to storage. A sharp separation is obviously necessary.

In order to make the sharp separation, I employ a flow controller 32 which may be a motorized or solenoid valve which is normally closed when unenergized. Alternatively, the flow controller may be a discharge pump, but in either case it is operatively controlled in accordance with my interface indicator. The interface indicator in this case may be a short enlarged pipe section 33, having an upper flange bolted to the bottom of vessel 26 and a lower flange bolted to flow controlled 32. The threaded portions 23 of electrode elements 10*a* and 10*b* are threaded into tapped openings on each side of pipe section 33 and adjusted so that tips 12 point downwardly and are about one inch apart. Hose connections 24*a* and 24*b* are connected to a source 34 of conducting liquid which in this case may be ordinary tap water or which may be aqueous acid of approximately the same acidity as the acid sludge. Lead lines 16*a* and 16*b* are connected to the proper terminals of instrument box 35 which houses a conductivity bridge, such as a Wheatstone bridge, and a differential relay of conventional construction (of the type, for example, marketed by Industrial Instruments, Inc. under the name "Solu-Bridge Controller"). The instrument is connected to a 110 volt line by lead lines 36. Each leg of the conductivity bridge may be of approximately 300,000 ohms, with one leg being of variable impedance for adjustment in accordance with minor conductivity variations of one of the immiscible liquids (in this case the acid sludge phase) and one leg comprising the actual resistance as measured by the electrodes. The ends of the conductivity bridge which are not connected across the electrical supply line are connected to the differential relay to which a common or return line 37 is connected and which energizes line 38 when the bridge is in balance, i. e. when the conductivity corresponds to that of the acid sludge phase, thus lighting green light 39 to give visual indication that the interface has not yet been reached and opening solenoid valves 43 and 45, as will be hereinafter described.

As the interface passes electrodes 10*a* and 10*b*, there is a sharp decrease in conductivity and the bridge becomes unbalanced which causes the differential relay to de-energize line 38 and to energize line 40, thus turning on red light 41 actuating buzzer or sound signal 42 and de-energizing solenoid 43 to alter flow controller 32, i. e. to allow it to close or change its position if it is a valve or to stop it if it is a pump. The instrument box may also be provided with an indicator 44 to give actual resistance or conductivity readings or to simply indicate when there has been a sharp change in resistance or conductivity. An additional solenoid control valve 45 stops the flow of conducting liquid through the electrodes at the instant the interface reaches them. The electrical and mechanical construction of solenoid 43 is so designed that controller 32 will be actuated a fraction of a second after line 38 is de-energized so that the interface will actually reach the flow controller before the flow controller operates (i. e., is closed or changed in the case of a valve or stopped in the case of a motor). An auxiliary switch (not shown) may be provided to open valve 32 allowing further draining after the valves in lines 30 and 31 have closed and opened, respectively.

As the aqueous acid sludge passes downwardly through pipe section 33, there may be a tendency for tarry material to deposit on exposed surfaces, but the constant flow of conducting liquid from source 34 through the interior of hollow electrode pipe 11 prevents any deposits from accumulating on the conducting surface of the hollow electrode. The rate of conducting liquid flow through the hollow electrode is not critical and may be set from dribble or dropwise flow to jets of considerable velocity. Tap water or water containing dissolved electrolyte is the preferred conducting liquid in this case since it does not contaminate the aqueous acid sludge but is simply carried along with the moving mass of acid sludge after it has served its function of keeping electrode surfaces free from deposit and actually conducting current from the tip of the electrode.

While I have described a particular example of my invention, it should be understood that this example is merely illustrative and that numerous modifications and alternative arrangements of equipment may be employed. In all cases there may be some tendency for the shunting of electrical current from the electrode tips via the walls of the vessel or via the conducting liquid inlets as a result of a residual lining of the more conductive liquid; resistance to such shunting should be maintained at a maximum by the geometrical arrangement of apparatus and proper use of insulation, lines 24*a* and 24*b* preferably being of non-conductive material and being relatively long. If the conducting liquid is of high conductivity, it may be necessary or desirable to employ a separate insulated source of same for each electrode. The lead resistance, on the other hand, should be a minimum and hence the hollow electrode tube 11 should be of conducting metal which is connected by metal conductors to the instrument box 35. The hollow electrode provides a large surface for conduction of electricity from the tip of the electrode through the conducting liquid passing therethrough. The

distance between electrodes is preferably small but sufficiently large to prevent bridging of viscous material. Electrode surfaces may be of other shapes than that hereinabove described provided that their surfaces are kept clean by a flowing fluid stream, which acts to provide continuously renewed electrode surfaces.

I claim:

1. An apparatus which comprises a hollow metallic electrode tube having an electrically insulating sheath on its outside surface and having a tapered discharge end of small cross-sectional area, a conduit connected to the inlet end of said tube for flowing a conducting liquid therethrough and an electrical circuit terminal connected to said metallic tube through said sheath.

2. An apparatus which comprises a pair of hollow metallic electrodes having outlet ends of small cross-sectional area and being electrically insulated on their exterior surfaces, connections for passing a conducting liquid through said hollow electrodes in such direction as to avoid impingement of the streams discharged therefrom while they are in spaced position in a second liquid, an electrical apparatus for passing a current from one electrode to the other while said conducting liquid is flowing through said electrodes and for measuring the conductivity of said second liquid.

3. An interface indicator which comprises a pair of hollow metallic electrodes which are electrically insulated on their exterior surfaces and which are provided with discharge ends of small cross-sectional area mounted in a liquid container with their discharge ends closely spaced and geometrically arranged to prevent impingement of streams discharged therefrom, said electrodes being insulated from said container, connections for introducing a conducting liquid through said hollow electrodes and electrical connections for passing a current from the metal conducting surface of one electrode through the conducting liquid being discharged therefrom, thence through the liquid in the container which is between the two electrodes, and finally through the conducting liquid discharged from the other electrode to the conducting surface of the other electrode.

4. Apparatus for separating oil from acid sludge which comprises a receptacle for containing oil and acid sludge with an interface between these immiscible liquids, two exteriorly insulated hollow metal electrodes extending through the walls of said connection with their discharge tips adjacent each other and directed downwardly, electrical non-conducting conduits for introducing a conducting liquid into each hollow electrode whereby conducting liquid may be continuously passed across the conducting inner surfaces of said electrode and discharged dropwise from the discharge ends thereof, electrical connections between the hollow electrodes and a controller comprising a conductivity bridge and a differential relay, and means for supplying electrical current to said conductivity bridge and relay whereby said relay is actuated when the interface passes between the discharge ends of the electrodes.

5. An apparatus for measuring the conductivity of a first flowing liquid containing components which would normally foul electrodes by forming deposits thereon, which apparatus comprises a pair of hollow electrodes, electrical insulation on the entire outside surface of each electrode, a metallic conductor with conducting surface exposed within the electrical insulation of each electrode, a separate fluid conduit of electrical non-conducting material secured at one end of each electrode for introducing a second liquid of electrical conductivity into each electrode, each electrode being provided with a small discharge opening extending through the electrical insulation so that the second liquid introduced through said conduit flows along and in contact with the conducting surface of the metallic conductor and is discharged as a continuous stream through the opening, supports for holding said electrodes in such fixed and closely spaced relationship that the streams continuously discharged from the openings are introduced into the first flowing liquid without impinging upon each other and are carried away from said electrodes by the first flowing liquid, and separate metallic electrical connections leading from each of the metallic conductors.

6. The method of measuring the conductivity of a test liquid containing components which would normally foul electrodes by forming deposits thereon, which method comprises injecting continuously flowing streams of a conducting liquid into the test liquid at spaced points, effecting a relative movement between the test liquid and the points of injection of the conducting liquid streams for preventing accumulation of the conducting liquid at the points of its introduction, contacting each introduced stream with a metallic electrode surface which is electrically insulated from the test liquid and which is kept clean by the flowing stream of conducting liquid, and passing an electrical current from one conducting metallic surface through the liquid stream flowing past said surface, thence through the portion of the test liquid which is between the introduced streams, and thence through the second introduced stream to the second metallic surface.

7. The method of claim 6 wherein the conducting liquid is tap water.

8. The method of claim 6 which includes the step of flowing the conducting liquid through conduits which are sufficiently long and electrically non-conductive so that there will be no substantial by-passing of electrical current between the conducting metallic surfaces and the source of the conducting liquid.

CHARLES E. BRAGG.

References Cited in the file of this patent

UNITED STATES PATENTS

Number	Name	Date
1,871,103	White	Aug. 9, 1932
1,898,209	Parker	Feb. 21, 1933
1,901,330	Poberejsky	Mar. 14, 1933
2,246,981	Matheson et al.	June 24, 1941
2,378,440	Scott	June 19, 1945
2,492,174	Noble et al.	Dec. 27, 1949
2,586,169	Kline	Feb. 19, 1952