M. SCHMIDT.

CYLINDER FOR STEAM ENGINES AND THE LIKE.

APPLICATION FILED SEPT. 23, 1912.

1,068,937.

Patented July 29, 1913.

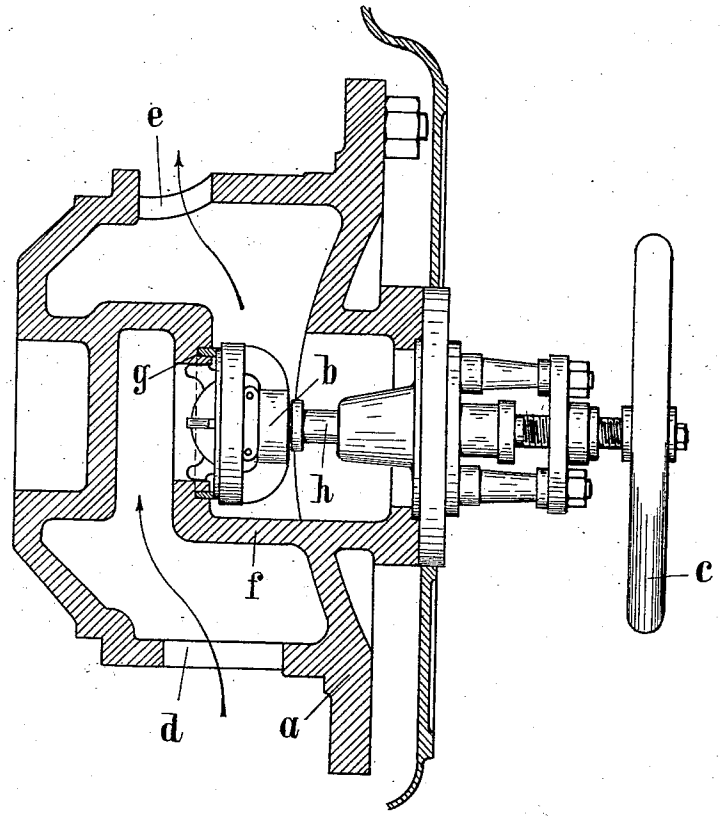

Witnesses:

M. E. McDade.

Inventor

Max Schmidt

by

James L. Norris

Atty

COLUMBIA PLANOGRAPH CO., WASHINGTON, D. C.

UNITED STATES PATENT OFFICE.

MAX SCHMIDT, OF HIRSCHBERG, GERMANY.

CYLINDER FOR STEAM-ENGINES AND THE LIKE.

1,068,937. Specification of Letters Patent. Patented July 29, 1913.

Application filed September 23, 1912. Serial No. 721,839.

To all whom it may concern:

Be it known that I, MAX SCHMIDT, director, a citizen of the Kingdom of Prussia, Empire of Germany, residing at Hirschberg, Province of Silesia, Germany, have invented certain new and useful Improvements in Cylinders for Steam-Engines and the Like, of which the following is a specification.

My invention relates to improvements in cylinders for steam engines and the like. And the object of the improvements is to provide a cylinder in which the admission valve for the steam or other pressure fluid is disposed within the cylinder head, the latter being constructed in the form of a valve casing.

For the purpose of describing the invention an example embodying the same has been shown in the accompanying drawing, in which a longitudinal section of the cylinder head equipped with the admission valve is shown.

Referring to the example illustrated in the drawing, the cylinder head *a* is made hollow and it is formed with an inlet passage *d* and an outlet passage *e*. The inlet passage is connected with a suitable admission pipe (not shown) and the outlet passage communicates with the steam chest. The cylinder head is provided internally with a partition *f* which is formed with a valve seat *g*. On the latter an admission valve *b* is seated which is adapted to be operated by means of a hand wheel *c* mounted on the valve stem *h*.

By the construction described the cylinder head is heated by the steam or other pressure fluid which passes through the said head, and such heating is particularly effective, by reason of the whirls produced by the steam passing through the valve. A further advantage of my improved construction resides in the fact, that a special valve casing is avoided. Thereby the cost of construction of the engine is reduced, and the engine requires less space. The admission of the pressure fluid to the opposite end of the cylinder may be made in any preferred way.

I claim herein as my invention:

In a cylinder for steam engines and the like, the combination with the cylinder, of a hollow cylinder head provided with admission and outlet passages for the pressure fluid and constructed internally in the form of a valve chamber, and an admission valve disposed within said cylinder head and equipped with operating means.

In testimony whereof I have hereunto set my hand in presence of two subscribing witnesses.

MAX SCHMIDT.

Witnesses:
OTTO WEINHERT,
FR. SCHAFFELDT.

Copies of this patent may be obtained for five cents each, by addressing the "Commissioner of Patents, Washington, D. C."