Jan. 27, 1931. T. MIDUNO 1,790,433

VENTILATING APPARATUS

Filed Feb. 19, 1929 2 Sheets-Sheet 1

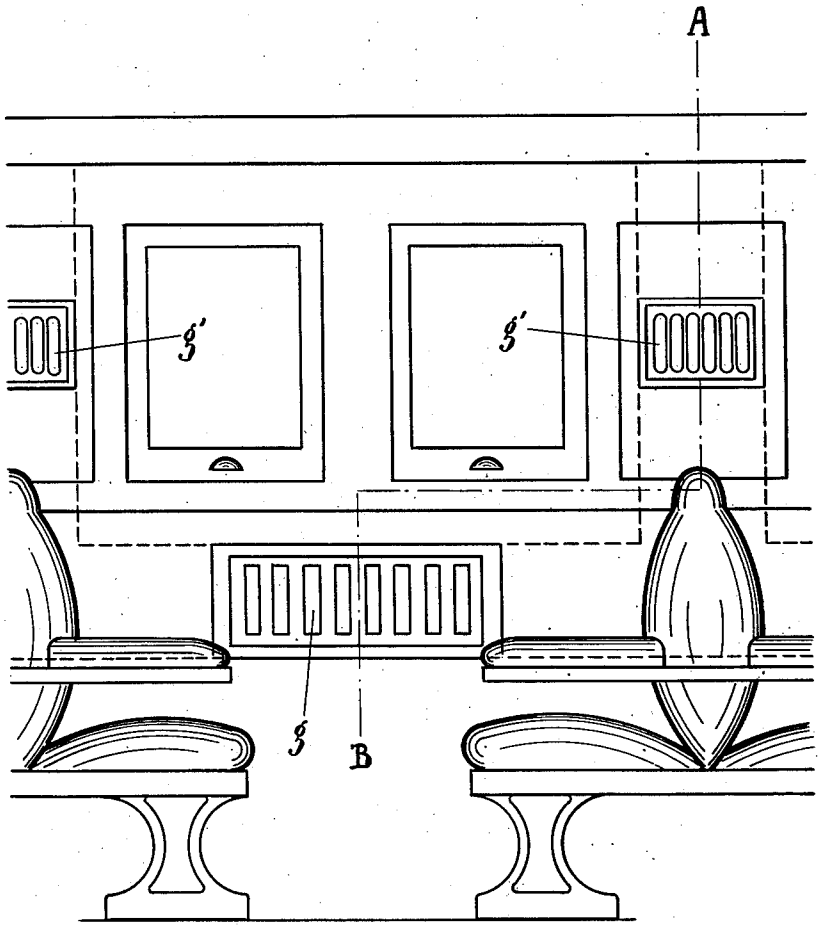

Fig. 1

Inventor:
Takéo Miduno.
BY Attorney:

Jan. 27, 1931. T. MIDUNO 1,790,433

VENTILATING APPARATUS

Filed Feb. 19, 1929 2 Sheets-Sheet 2

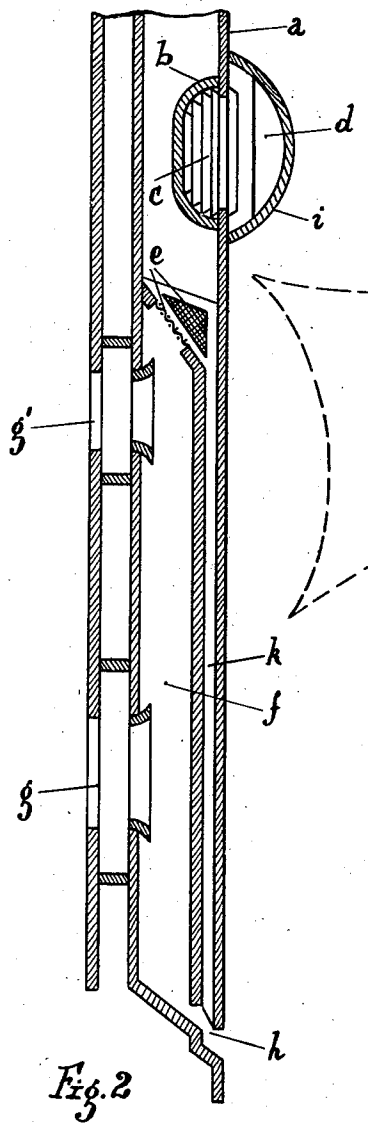

Fig. 2

Fig. 3

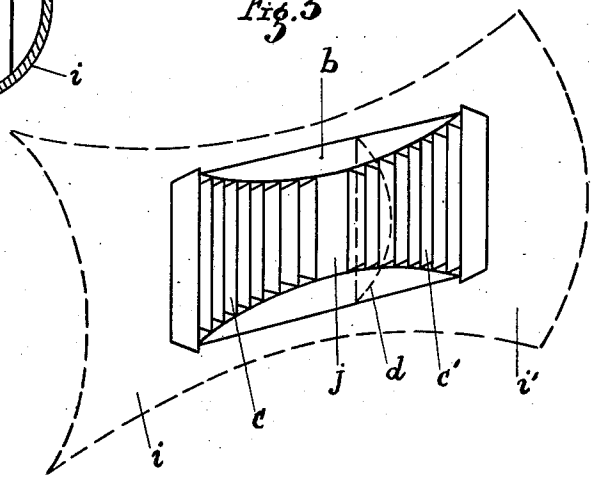

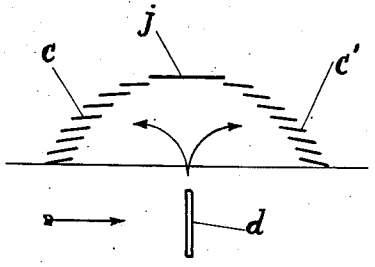

Fig. 4

Inventor:
Takéo Miduno.

BY Attorney:

Patented Jan. 27, 1931 1,790,433

UNITED STATES PATENT OFFICE

TAKEO MIDUNO, OF GARDEN CITY, NEAR TOKYO, JAPAN

VENTILATING APPARATUS

Application filed February 19, 1929, Serial No. 341,162, and in Japan April 10, 1928.

This invention relates to improvements in ventilating devices for railway-carriages, electric cars, ships and other vehicles and it consists of a ventilating shutter provided with lattices and arranged inside a rectangular opening formed in the wall of the car or the like in association with a pair of trumpet shaped ventiducts, which are joined together at their smaller ends and are arranged outside of the car wall. The smaller ends of the ventiducts form a space for an air intercepting plate, which is removably arranged at right angles to the wall, the ventilation of the car being easily regulated by taking away or arranging the intercepting plate in said interval.

The object of my invention is to provide a ventilating device which will exhaust the vitiated air from the car or permit the entrance of fresh air into the car by the absence or presence of the intercepting plate, and which also serves to prevent rain-water, soot, etc., from entering the car.

Referring now to the drawing:

Fig. 1 is a face view of the inside of a car, illustrating the application of the invention.

Fig. 2 is a vertical sectional view on the line A—B of Fig. 1.

Fig. 3 is a perspective view of the trumpet shape ventilating shutter provided with lattices, the broken line showing the ventiducts.

Fig. 4 shows a diagrammatic sectional plan view of the ventiduct, intercepting plate and ventilating shutter through which the air enters the car.

b denotes a rectangular opening formed in the wall-plate *a* of the car and equipped with spaced apart ventilating shutters *c* and *c'* which are inclined in opposite directions from the central plate *j* as shown in Figs. 3 and 4.

An intercepting plate *d* is removably mounted with respect to the central plate *j* of the shutter, and is arranged at right angles to the outside of the wall plate *a*. Trumpet shaped ventiducts *i* and *i'* are fixed against the outside of the wall *a* and are arranged in such manner that their small ends meet over the central plate *j* of the shutter and form a space for the reception of the intercepting plate *d*, while their larger ends are respectively directed forwardly and rearwardly of the car. A screen *e* is fitted in the top of a frame in the inside of the wall of the car. The frame has a funnel shape body, and the lower end is open to form an exhaust port *k*. Communicating with the interior of the car and the funnel shape body are closely interlaced lattices *g* and *g'* through which fresh air is admitted to the interior of the car. These lattices *g* and *g'* are controlled through the medium of regulating closures.

f is a short cylindrical ventilating passage in the inner wall of the car which connects at its upper end with the screwed upper end *e* of the funnel shape body and the lattice openings *g* and *g'*. The movement of the car forces the air into one or the other of the trumpet ventiducts *i*—*i'* and strikes the intercepting plate *d* and is forced through the screen *e* and into the car through the interlaced lattices *g* and *g'*, the lattices acting to filter the air.

The rain soot and dust in the air passing through the lattices *c* or *c'* are collected by the net *e* and are exhausted through the tube *k* and opening *h*. The bottom side of the trumpet shaped ventiducts *i* and *i'* on opposite sides of intercepting plate *d* collect most of the rain that runs down the trumpets.

If it is desired to exhaust the vitiated air from the car, the intercepting plate *d* is removed from the ventiducts *i* and *i'*. The air then flows straight through the trumpet ventiducts *i* and *i'* and rarefies the air in the rectangular opening *b* of the wall plate *a*, and the vitiated air in the car is drawn toward the opening *b* and is exhausted with the air passing through the ventiducts.

Obviously, as the end parts of the trumpet shaped ventiducts *i* and *i'* are enlarged, the speed of the ventilating air is increased. During cold weather cold air can be prevented from entering into the car by covering the mouth of the ventiducts *i* or *i'* with suitable means, or by closures associated with the lattices *g* and *g'*.

Having now fully described my said invention, what I claim and desire to secure by Letters Patent, is:

1. A ventilating device for railway-carriages and the like, consisting in the combination of a ventilating shutter arranged inside an opening in the outside wall-plate of the car, a pair of trumpet-shaped ventiducts outside the wall, the smaller ends of which join and form a space over the central portion of the said shutter, and an air intercepting plate removably arranged in said space at right angles with the wall, whereby under the presence of said plate the apparatus becomes an induction apparatus and on the removal of said plate the apparatus becomes an eduction apparatus.

2. A ventilating device for railway-carriages and the like, comprising a ventilating shutter arranged inside an opening in the outside wall-plate of the car, a pair of trumpet-shaped ventiducts outside the wall, the smaller ends of which join and form a space over the central portion of said shutter and the enlarged ends are oppositely and respectively directed forwards and rearwards of the car, and an air intercepting plate removably arranged in said space at right angles to the wall and by which the current of air received in the trumpet-shaped ventiduct directed forwards, is directed through or over the ventilating shutter according to the presence or absence of said plate.

3. A ventilating device for railway-carriages and the like, comprising a ventilating shutter arranged inside an opening in the outside wall-plate of the car, a pair of trumpet-shaped ventiducts outside the wall, the smaller ends of which join and form a space over the central portion of said shutter and the enlarged ends are oppositely and respectively directed forwards and rearwards of the car, an air intercepting plate arranged in said interval at right angles to the wall, and means for detachably mounting the plate in the said space.

4. A ventilating device for railway-carriages and the like, comprising a ventilating shutter arranged inside an opening in the outside wall-plate of the car, vertical lattices of said shutter directed in different directions towards the inside of the wall from central portion of the shutter, a pair of trumpet-shaped ventiducts outside the wall, the smaller ends of which join and form a space over the said central portion of the shutter and the enlarged ends are oppositely and respectively directed forwards and rearwards of the car, an air intercepting plate arranged in said space at right angles to the wall, and means for detachably mounting said plate in the space, substantially as set forth.

5. A ventilating device for railway-carriages and the like, consisting in the combination of a ventilating shutter arranged inside an opening in the outside wall plate of the car, vertical lattices of said shutter directed in different directions towards the inside of the wall from the central portion of the shutter, a pair of trumpet shaped ventiducts outside the wall, the smaller ends of which join and form a space over the said central portion of the shutter and the enlarged ends are oppositely and respectively directed forwards and rearwards of the car, an air intercepting plate arranged in said space at right angles to the wall, means for detachably mounting said plate in the space, and a close net mounted on a funnel shaped body inside the frame of the wall and through which the current of air is filtered before entering the car for the purpose set forth.

6. A ventilating device for railway-carriages and the like, consisting in the combination of a ventilating shutter arranged inside an opening in the outside wall plate of the car, vertical lattices of said shutter directed in different directions towards the inside of the wall from the central portion of the shutter, a pair of trumpet shaped ventiducts outside the wall, the smaller ends of which join and form a space over the said central portion of the shutter and the enlarged ends are oppositely and respectively directed forwards and rearwards of the car, an air intercepting plate arranged in said space at right angles with the wall, means for detachably mounting said plate in the space, a close net mounted on a funnel shaped body inside the frame of the wall an air conduit leading from said close net to closely interlaced lattices opening to the interior of the car and doors for controlling said last named lattices.

7. A ventilating device for railway-carriages and the like, consisting in the combination of a ventilating shutter arranged inside an opening in the outside wall plate of the car, vertical lattices of said shutter directed in different directions towards the inside of the wall from the central portion of the shutter, a pair of trumpet shaped ventiducts outside the wall, the smaller ends of which join and form a space over the said central portion of the shutter and the enlarged ends are oppositely and respectively directed forwards and rearwards of the car, an air intercepting plate arranged in said space at right angles to the wall, means for detachably mounting said plate in the interval, a close net mounted on a funnel shaped body inside the frame of the wall, means for exhausting rain-water, soot and dust retained by said close net, an air conduit leading from said close net to closely interlaced lattices opening into the car, and doors for controlling said last named lattice.

In testimony whereof I have hereunto set my hand.

TAKEO MIDUNO.