July 18, 1950 E. VOSSEN 2,515,479

STOP MOTION FOR KNITTING MACHINES
WITH FULL RANGE ADJUSTMENT
Filed June 18, 1949

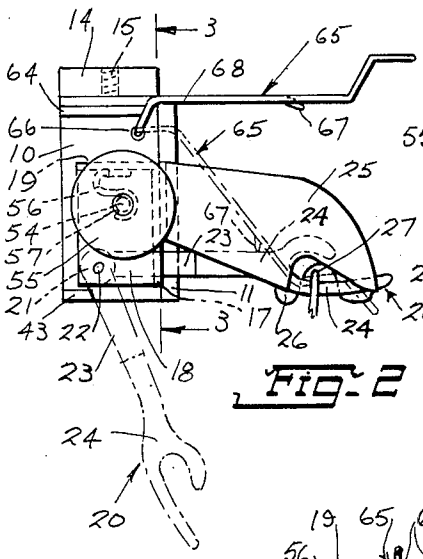

Fig. 2

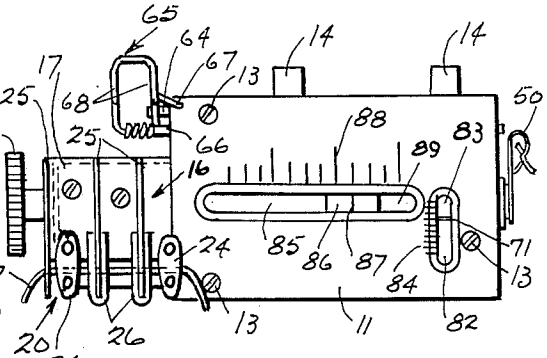

Fig. 1

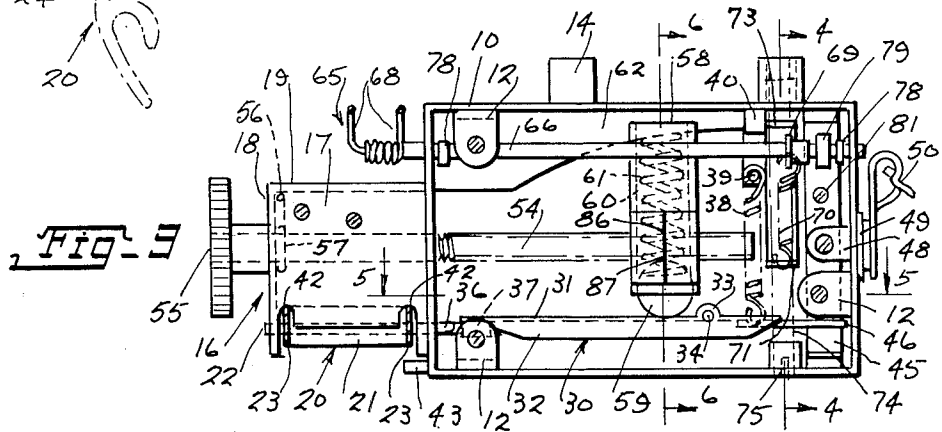

Fig. 3

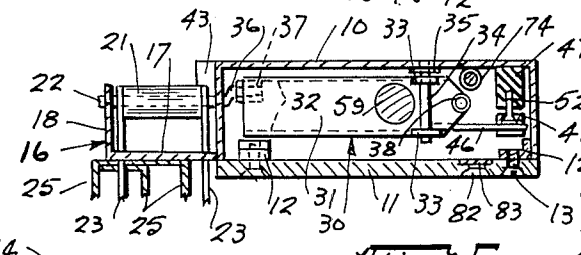

Fig. 5

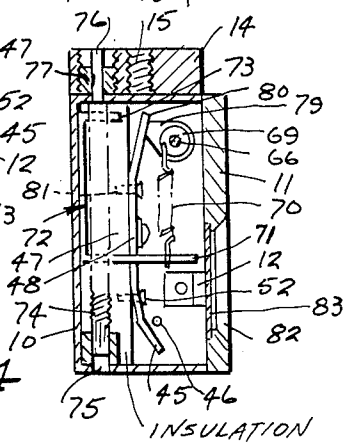

Fig. 4

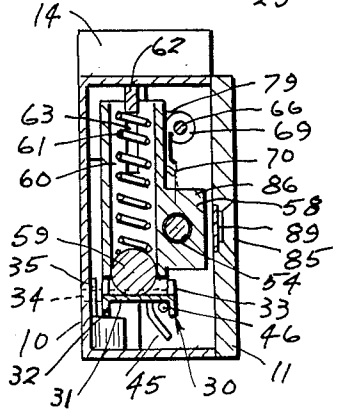

Fig. 6

INSULATION

INVENTOR
EDWARD VOSSEN
BY
Edward Vossen
ATTORNEY

Patented July 18, 1950

2,515,479

UNITED STATES PATENT OFFICE

2,515,479

STOP MOTION FOR KNITTING MACHINES WITH FULL RANGE ADJUSTMENT

Edward Vossen, Lynbrook, N. Y., assignor to Stop-Motion Devices Corp., Brooklyn, N. Y., a corporation of New York

Application June 18, 1949, Serial No. 100,008

12 Claims. (Cl. 66—163)

1

This invention relates to new and useful improvements in stop motions for knitting machines and the like, and has more particular reference to a stop motion with full range adjustments.

Heretofore, stop motion devices for indicating knots, slubs, and other drags, and broken and other ends have been constructed for different weights of yarn. Usually, a set of four stop motion devices were required to cover the entire range from light yarns of 60 single cotton, or 15 denier nylon, up to the heaviest yarns used in knitting machines. The dominant object of this invention resides in a new construction for a stop motion device capable of adjustment to operate for the full range of yarns from the lightest to the heaviest.

The prior stop motions used for the different ranges of weights of yarn differed from each other merely in the weights of the springs. For very light weights of yarn light springs were used, and for the heavier weights heavier springs were required. It was found that four weights of springs would cover adjustability for the entire range of yarn weights needed. However, because of the four different ranges it was necessary to carry in stock stop motions equipped with the four different weights of springs. An immediate advantage gained with the new stop motion device, in accordance with this invention, which covers the entire range required, is that the amount of stock which must be carried is materially reduced. Moreover, because each of the stop motion devices for all of the weights are absolutely identical, costs are lower because of greater mass production possible.

It is proposed that the full range adjustment for the new stop motion, in accordance with this invention, be obtained by providing a yarn drag detector finger and associating it with a pivoted pressure control lever for moving the detector finger upwards when the lever is pivoted in one direction. A switch for connection with the controller circuit of the knitting machine is connected to operate when said detector finger is moved downwards. This invention particularly proposes the use of a very light spring connected with said lever for pivoting said lever in the direction which urges the said detector finger upwards with the very slightest of pressure so that the stop motion may be used on the lightest of yarns, such as 60 single yarn or 15 denier nylon.

It is proposed that an adjustment screw be rotatively mounted substantially parallel to the lever mentioned in the previous paragraph. It is proposed that a follower be mounted on said screw

2

and movable from a position over the pivot of said lever outwards thereof. An important object of this invention resides in providing said follower with a spring loaded pressure point element with a control spring engageable on said pivot for zero pressure, and engageable upon points on said lever outwards of said pivot for increased pressure, depending upon its distance from said pivot. Another important object of this invention resides in providing a cam extending along the path of said follower and engaging said control spring in order to increase and add to the pressure of the point element for different positions of the point element along the length of said lever. Because of this cam it is possible to sufficiently increase the pressure of the point element to cover the entire range of operation already referred to.

Another object of this invention resides in the use of a steel ball for comprising the pressure point element referred to in the previous paragraph.

It is also proposed to equip the stop motion with a yarn end detector finger and means for adjusting the tension thereof including an adjustment screw and follower threadedly mounted thereon.

Another and important object of this invention resides in the provision of scales for indicating the tensions of the yarn drag indicator finger and the yarn end detector finger so that the stop motion device may be set to selected tensions merely by the use of the scales. This construction is quite important because it saves time in adjusting the stop motion device when different yarn is used. The operator merely keeps a record of just what tensions are required for the different yarns, and when the yarn is changed all of the stop motions on the machine may be correctly set merely by adjusting them in accordance with the readings of the scales.

Because of the full range of adjustment it is necessary that the contact spring or springs and the engaging contacts be properly adjusted in the stop motion. For this reason this invention proposes to mount the contact spring upon an insulation block and to provide one or more adjustment screws by which the contact spring may be suitably flexed and then held in relation to the contacts which are to engage it.

For further comprehension of the invention, and of the objects and advantages thereof, reference will be had to the following description and accompanying drawing, and to the appended claims in which the various novel features of the invention are more particularly set forth.

In the accompanying drawing forming a material part of this disclosure:

Fig. 1 is a front elevational view of a stop motion constructed in accordance with this invention.

Fig. 2 is an end view of Fig. 1 looking from the left hand end.

Fig. 3 is an enlarged sectional view taken on the line 3—3 of Fig. 2.

Fig. 4 is a transverse sectional view taken on the line 4—4 of Fig. 3.

Fig. 5 is a fragmentary horizontal sectional view taken on the line 5—5 of Fig. 3, but drawn on a reduced scale.

Fig. 6 is a transverse sectional view taken on the line 6—6 of Fig. 3.

The stop motion with full range adjustment, in accordance with this invention, includes a box 10 provided with a removable cover 11. Several angle brackets 12 are attached to the inside of the box 10 adjacent its edge for accommodating screws 13 by which the cover 11 is held in position. A pair of strips 14 are mounted on the box 10 and are provided with threaded openings 15 by which the box 10 may be attached to a suitable support on a knitting or other machine.

The box 10 is provided with a supporting hood 16 at one side consisting of a front wall 17, an end wall 18, and a top wall 19. A yarn drag detector finger 20 is mounted between the end wall 18 and the adjacent end wall of the box 10. This detector finger 20 consists of a rod 21 mounted on an axle 22. A pair of finger sections 23 are mounted upon the ends of the rod 21. The axle 22 is mounted between the end wall 18 and the adjacent end of the box 10. The finger sections 23 are provided with the usual porcelain outer ends 24 through which the yarn 27 may pass. A group of stationary fingers 25 are mounted on the front wall 17 and extend forwards adjacent and between the finger sections 23. These fingers 25 are provided with porcelain portions 26 for assisting in guiding the yarn 27. In Figs. 1 and 2 reference numeral 27 schematically indicates a strand of yarn mounted across finger sections 24 and extending beneath the porcelain sections 26 in the usual way in which yarns are threaded through similar stop motions.

A pivoted pressure control lever 30 is connected with said detector finger 20 for moving said detector finger 20 upwards when said lever 30 is pivoted in one direction, namely downwards. More specifically, the lever 30 is formed from sheet metal and is bent to have a top wall 31 and side walls 32. Along its sides, the top wall 31 is provided with a pair of upwardly directed lugs 33. A pintle pin 34 engages through the lugs 33 and is secured to a block 35 attached to the back wall of the box 10. This pintle pin 34 forms the pivot for the lever 30. The axle 22 of the detector finger 20 passes through the end wall of the box 10 and continues into a crank section 36 provided with a roller 37 which engages the left hand end of the lever 30 beneath its top wall 31 and between its side walls 32. A very light spring 38 is connected with the right hand end of the lever 30 and extends upwards and is mounted upon a pin 39 mounted on a block 40 attached to the back wall of the box 10. The pintle pin 34 is positioned quite close to the right hand end of the lever 30 so that the spring 38 is at a mechanical disadvantage and exerts a very small pressure through the lever 30 upon the crank 36 and the axle 22 to the detector finger 20. This slight pressure pivots the detector finger 20 upwards to a position in which the finger sections 23 engage the top ends of slots 42 formed upwards in the front wall 17 from the bottom edge thereof.

In Fig. 2 the detector finger 20 is shown in its normal horizontal position with full lines, and the dot and dash lines show it pivoted downwards as it would appear when dragged down by tightening of the yarn 27. A stop 43 is mounted upon the outer face of one end of the box 10 for limiting downward pivoting of the detector finger 20 by acting as a stop by engaging one of the sections 23 thereof.

A switch consisting of a contact spring 45 and cooperating contact 46 is indirectly associated with the detector finger 20 so that said switch 45, 46 closes when the detector finger 20 is moved downwards. This switch 45, 46 is for connection with the usual controller circuit of the knitting machine. The contact spring 45 is mounted at its center upon an insulation block 47 mounted upon the back wall of the box 10. A clip 48 connects with the center of the contact spring 45 and engages through an insulation bushing 49 mounted through the end wall of the box 10, and said clip 48 connecting with the usual terminal clip 50 on the side of the box 10. The contact 46 is fixedly mounted on the adjacent end of the lever 30.

It is pointed out that when the detector finger 20 moves downwards the crank 36 will pivot upwards, pivoting one end of the lever 30 upwards so that the other end is moved downwards against the restraining action of the spring 38. This latter end of the lever 30 carries the contact 46 which moves downwards to engage the bottom end portion of the contact spring 45. The bottom end portion of the contact spring 45 is bent forwards (see Fig. 4). It is held in a selected rearward position by an adjustment screw 52 engaging through the spring 45 and threadedly mounted upon the insulation block 47. The head of the screw 52 holds the bent end of the contact spring 45 in a selected forward position. However, the said end of the spring 45 is free to bend rearwards when the contact 46 engages it during its downward motion.

An adjustment screw 54 is rotatively mounted substantially parallel to the lever 30. This adjustment screw 54 rotatively engaged through one end of the box 10 and through the wall 18. The outer end of the screw 54 is provided with a knob 55 by which it may be turned. An S-shaped spring 56 (see Fig. 2) is attached at one end to the top wall 19 and its other end engages a groove 57 formed around the shank of the screw 54 for rotatively holding the screw 54 in rotative position and preventing it from moving longitudinally. A follower 58 is threadedly mounted on the screw 54 and is movable from a position over the pintle pin 34 of the lever 30 outwards thereof towards the left in relation to Fig. 3.

The follower 58 is provided with a spring loaded pressure point element 59 in the form of a steel ball 59. This steel ball 59 is engaged in the bottom of an opening 60 formed through the follower 58. A control spring 61 is engaged in the opening 60 and engages against the steel ball 59 for providing suitable pressure. A cam 62 extends along the path of the follower 58 and engages said pressure control spring 61 in order to increase and add to the pressure of the pivot element 59 when the follower 58 moves in one direction, namely to the left. The cam 62 is fixedly mounted along the top wall of the box 10.

The follower 58 is provided with a slot 63 into which the cam 62 projects. This slot 63 extends through the opening 60 so that the cam 62 engages the top of the spring 61. The cam 62 is so shaped that it is shallow above the pintle pin 34 and progressively gets deeper away from the pintle pin 34 towards the left hand end of the lever 30, see Fig. 3.

The stop motion is also provided with an end detector finger 65. This finger is mounted upon the end of a rod 66 turnably mounted through the end walls of the box 10. The yarn end detector finger 65 has side portions 68 engaging between the fingers 25. It is also provided with a laterally projecting portion 67 engageable against one of the finger sections 24. The yarn end detector finger 65, in the operating position of the stop motion, is in the dot and dash position as illustrated in Fig. 2, in which position it is held down by yarn 27. The rod 66 is provided with a collar 69. A small tension spring 70 is connected eccentrically on the collar 69 for urging the rod 66 in a direction which moves the yarn end detector finger 65 upwards to a raised position against a stop 64 mounted on the side of the box 10. The bottom end of the spring 70 connects with one arm 71 of a follower 72 which has a top arm 73. A vertical screw 74 is rotatively mounted in the box 10 and threadedly engages the arms 71 and 73 of the follower 72. The bottom end of the screw 74 is provided with a slot 75 for a screw driver by which it may be turned. The top end of the screw 74 is provided with a reduced end 76 which engages a collar 77 mounted in one of the strips 14. Collars 78 are mounted on the rod 66 adjacent the ends of the box 10 for holding the rod 66 in position. A contact finger 79 is mounted on the rod 66 and in the raised position of the yarn end detector finger 65 engages the top forwardly bent end 80 of the contact strip 45. An adjustment screw 81 is mounted in the insulation block 47 for controlling the distance to which the bent end 80 may move forwards when disengaged by the contact 79. The contact 79 is in the form of a radial arm. When the yarn end detector finger 65 is moved downwards the contact 79 disengages from the end 80 of the contact spring 45.

The cover 11 is provided with a vertical window opening 82 through which the edge of the arm 71 may be seen. A transparent pane 83 is mounted across the back of the window opening 82. A scale 84 is imprinted along the window opening 82. The cover 11 is also provided with a horizontal window opening 85 through which a front portion 86 of the follower 58 may be seen. This front portion 86 is imprinted with a vertical line 87 which may be seen through the window opening 85. This vertical line 87 may be read in conjunction with a scale 88 imprinted along the window opening 85. A transparent member 89 is mounted upon the back of the window opening 85 for closing it.

The operation of the stop motion may be understood from the following:

The tension of the yarn drag detector finger 20 may be adjusted through its full range by merely turning the knob 55 to turn the screw 54. In this way the follower 53 may be set so that the spring loaded pressure point element, namely the steel ball 59, rests on the pintle pin 34 and in this position the pressure loaded steel ball 59 applies no pressure whatsoever upon the lever 30. Now merely the spring 38 supplies pressure to the lever 30, which in turn transmits this pressure to the crank 36 and the yarn drag detector finger 20 for urging the latter upwards with a minimum of pressure for light yarns of 60 single cotton or 15 denier nylon. If more pressure is needed for these yarns, or for heavier yarns, it is merely necessary to turn the knob 55 so as to move the follower 53 so that the spring loaded pressure point element 59 rides off of the pintle pin 34 and rests upon the lever 30 at a point adjacent the pin 34. Now the spring 61 supplements the pressure supplied by the spring 38. The pressure may be increased by continuing to turn the knob 55 to cause the follower 53 to move further towards the left. This will increase the moment advantage of the pressure point element 59 in relation to the pivot pin 34. Furthermore, the cam 62 is so designed as to increase the pressure of the spring 61, according to the curvature of the cam 62, so that the pressure point element 59 will supply the necessary increased pressures for yarns all the way up to the heaviest yarns used on the knitting machine.

The tension of the yarn end detector finger 65 may be controlled by engaging a turning element in the slot 75, then the screw 74 is turned to move the follower 72 upwards or downwards so as to change the tension of the spring 70 which controls the upward tension of the yarn detector finger 65.

An important feature of the new stop motion device resides in the fact that the settings of the follower end 71 along the scale 84, and of the line 87 along the scale 88 may be noted for different yarns and for different conditions so that the stop motion may easily be set to a desired reading to provide predetermined tensions. This is a great advantage in that all of the stop motions used in a particular knitting machine may be set to the same tensions.

Another important feature of this invention resides in the provision of the adjustment screws 52 and 81 by which the ends of the spring contact 45 may be adjusted for controlling the closing of the electric circuit through the stop motion. These screws 52 and 81 limit the forward bending of the ends of the contact spring 45 so that they may be correctly positioned not to short circuit the stop motion. These adjustment screws 52 and 81 do not interfere with the rearward flexing of the spring contact 45 which is required when the cooperating contacts 46 and 79 engage said contact spring.

While I have illustrated and described the preferred embodiment of my invention, it is to be understood that I do not limit myself to the precise construction herein disclosed and the right is reserved to all changes and modifications coming within the scope of the invention as defined in the appended claims.

Having thus described my invention, what I claim as new and desire to secure by United States Letters Patent is:

1. In a stop motion for knitting machines and the like, a pressure control lever, a pivot pivotally supporting said pressure control lever, a light spring connected with said lever for pivoting said lever in one direction with slight pressure, an adjustment screw rotatively mounted substantially parallel to said lever, a follower mounted on said screw and movable by turning said screw from a position over the pivot of said lever outwards thereof, a spring loaded pressure point element with a control spring mounted on said follower and engaging said pivot for zero pressure and engageable upon points on and along said lever

by moving said follower with adjustments of said screw for supplementing the pivoting pressure of said first named spring, and a cam extending along the path of said follower and engaging said control spring in order to vary the tension of said control spring for selected positions of said follower.

2. In a stop motion for knitting machines and the like, a pressure control lever, a pivot pivotally supporting said pressure control lever, a light spring connected with said lever for pivoting said lever in one direction with slight pressure, an adjustment screw rotatively mounted substantially parallel to said lever, a follower mounted on said screw and movable by turning said screw from a position over the pivot of said lever outwards thereof, a spring loaded pressure point element with a control spring mounted on said follower and engaging said pivot for zero pressure and engageable upon points on and along said lever by moving said follower with adjustments of said screw for supplementing the pivoting pressure of said first named spring, and a cam extending along the path of said follower and engaging said control spring in order to vary the tension of said control spring for selected positions of said follower, said follower having a slot into which said cam extends for slidably holding said follower non-rotative on said screw.

3. In a stop motion for knitting machines and the like, a pressure control lever, a pivot pivotally supporting said pressure control lever, a light spring connected with said lever for pivoting said lever in one direction with slight pressure, an adjustment screw rotatively mounted substantially parallel to said lever, a follower mounted on said screw and movable by turning said screw from a position over the pivot of said lever outwards thereof, a spring loaded pressure point element with a control spring mounted on said follower and engaging said pivot for zero pressure and engageable upon points on and along said lever by moving said follower with adjustments of said screw for supplementing the pivoting pressure of said first named spring, and a cam extending along the path of said follower and engaging said control spring in order to vary the tension of said control spring for selected positions of said follower, said pressure point element comprising a ball mounted in and projecting from an opening in said follower.

4. In a stop motion for knitting machines and the like, a pressure control lever, a pivot pivotally supporting said pressure control lever, a light spring connected with said lever for pivoting said lever in one direction with slight pressure, an adjustment screw rotatively mounted substantially parallel to said lever, a follower mounted on said screw and movable by turning said screw from a position over the pivot of said lever outwards thereof, a spring loaded pressure point element with a control spring mounted on said follower and engaging said pivot for zero pressure and engageable upon points on and along said lever by moving said follower with adjustments of said screw for supplementing the pivoting pressure of said first named spring, and a cam extending along the path of said follower and engaging said control spring in order to vary the tension of said control spring for selected positions of said follower, said pressure point element comprising a ball mounted in and projecting from an opening in said follower, and said control spring being mounted in said opening in said follower and acting between said ball and said cam.

5. A stop motion for knitting machines and the like, comprising a yarn drag detector finger, a pivot, a pressure control lever supported on said pivot, said pressure control lever being connected with said detector finger for moving said detector finger upwards when pivoted in one direction, a switch for connection with the controller circuit of the knitting machine and connected to operate when said detector finger is moved downwards, a light spring connected with said lever for pivoting said lever in said direction to urge said detector finger upwards with the slightest pressure, an adjustment screw rotatively mounted substantially parallel to said lever, a follower mounted on said screw and movable from a position over the pivot of said lever outwards thereof, a spring loaded pressure point element with a control spring mounted on said follower and engaging on said pivot for zero pressure and engageable upon points on said lever outwards of said pivot for increased pressure depending on its distance from said pivot, and a cam extending along the path of said follower and engaging said control spring in order to increase and add to the pressure of said point element.

6. A stop motion for knitting machines and the like, comprising a yarn drag detector finger, a pivot, a pressure control lever supported on said pivot, said pressure control lever being connected with said detector finger for moving said detector finger upwards when pivoted in one direction, a switch for connection with the controller circuit of the knitting machine and connected to operate when said detector finger is moved downwards, a light spring connected with said lever for pivoting said lever in said direction to urge said detector finger upwards with the slightest pressure, an adjustment screw rotatively mounted substantially parallel to said lever, a follower mounted on said screw and movable from a position over the pivot of said lever outwards thereof, a spring loaded pressure point element with a control spring mounted on said follower and engaging on said pivot for zero pressure and engageable upon points on said lever outwards of said pivot for increased pressure depending on its distance from said pivot, and a cam extending along the path of said follower and engaging said control spring in order to increase and add to the pressure of said point element, said follower having a slot into which said cam extends for slidably holding said follower non-rotative on said screw.

7. A stop motion for knitting machines and the like, comprising a yarn drag detector finger, a pivot, a pressure control lever supported on said pivot, said pressure control lever being connected with said detector finger for moving said detector finger upwards when pivoted in one direction, a switch for connection with the controller circuit of the knitting machine and connected to operate when said detector finger is moved downwards, a light spring connected with said lever for pivoting said lever in said direction to urge said detector finger upwards with the slightest pressure, an adjustment screw rotatively mounted substantially parallel to said lever, a follower mounted on said screw and movable from a position over the pivot of said lever outwards thereof, a spring loaded pressure point element with a control spring mounted on said follower and engaging on said pivot for zero pressure and engageable upon points on said lever outwards

of said pivot for increased pressure depending on its distance from said pivot and a cam extending along the path of said follower and engaging said control spring in order to increase and add to the pressure of said point element, said pressure point element comprising a ball mounted in and projecting from an opening in said follower.

8. A stop motion for knitting machines and the like, comprising a yarn drag detector finger, a pivot, a pressure control lever supported on said pivot, said pressure control lever being connected with said detector finger for moving said detector finger upwards when pivoted in one direction, a switch for connection with the controller circuit of the knitting machine and connected to operate when said detector finger is moved downwards, a light spring connected with said lever for pivoting said lever in said direction to urge said detector finger upwards with the slightest pressure, an adjustment screw rotatively mounted substantially parallel to said lever, a follower mounted on said screw and movable from a position over the pivot of said lever outwards thereof, a spring loaded pressure point element with a control spring mounted on said follower and engaging on said pivot for zero pressure and engageable upon points on said lever outwards of said pivot for increased pressure depending on its distance from said pivot, and a cam extending along the path of said follower and engaging said control spring in order to increase and add to the pressure of said point element, and said control spring being mounted in said opening in said follower and acting between said ball and said cam.

9. In a stop motion for knitting machines and the like, a yarn drag detector finger, adjustable means for resisting changes of position of said yarn drag detector finger for given yarn tensions, means for adjusting said means including an adjustment screw and a follower threadedly mounted thereon, a yarn end detector finger, adjustable means for resisting changes of position of said yarn end detector finger for given yarn tensions means for adjusting said last named adjustable means including an adjustment screw and a follower threadedly mounted thereon, a casing for said stop motion, and scales on said casing for indicating the positions of said followers in order that the resistance to position changes of said fingers to yarn tensions may be set by reading said scales.

10. In a stop motion for knitting machines and the like, a yarn drag detector finger, adjustable means for resisting changes of position of said yarn drag detector finger for given yarn tensions, means for adjusting said means including an adjustment screw and a follower threadedly mounted thereon, a yarn end detector finger, adjustable means for resisting changes of position of said yarn end detector finger for given yarn tensions, means for adjusting said last named adjustable means including an adjustment screw and a follower threadedly mounted thereon, a casing for said stop motion, and scales on said casing for indicating the positions of said followers in order that the resistance to position changes of said fingers to yarn tensions may be set by reading said scales, said casing having a window opening through which said followers may be seen.

11. In a stop motion for knitting machines and the like, an insulation block, a contact spring mounted upon said insulation block and having its contact end directed upwards, a contact for engaging said contact end of said contact spring, and an adjustment screw threadedly mounted on said insulation block and engaging said spring for controlling the amount to which said contact end is directed upwards.

12. In a stop motion for knitting machines and the like, a yarn end detector finger, a turnable rod supporting said finger, a collar on said rod, a spring connected at one end eccentrically on said collar, a follower connected with the other end of said spring, and an adjustment screw turnably mounted and threadedly engaging said follower for controlling the tension of said spring.

EDWARD VOSSEN.

REFERENCES CITED

The following references are of record in the file of this patent:

UNITED STATES PATENTS

Number	Name	Date
2,402,816	Ingalls	June 25, 1946