(No Model.) 2 Sheets—Sheet 1.

W. S. G. BAKER.

CAR TRUCK.

No. 460,348. Patented Sept. 29, 1891.

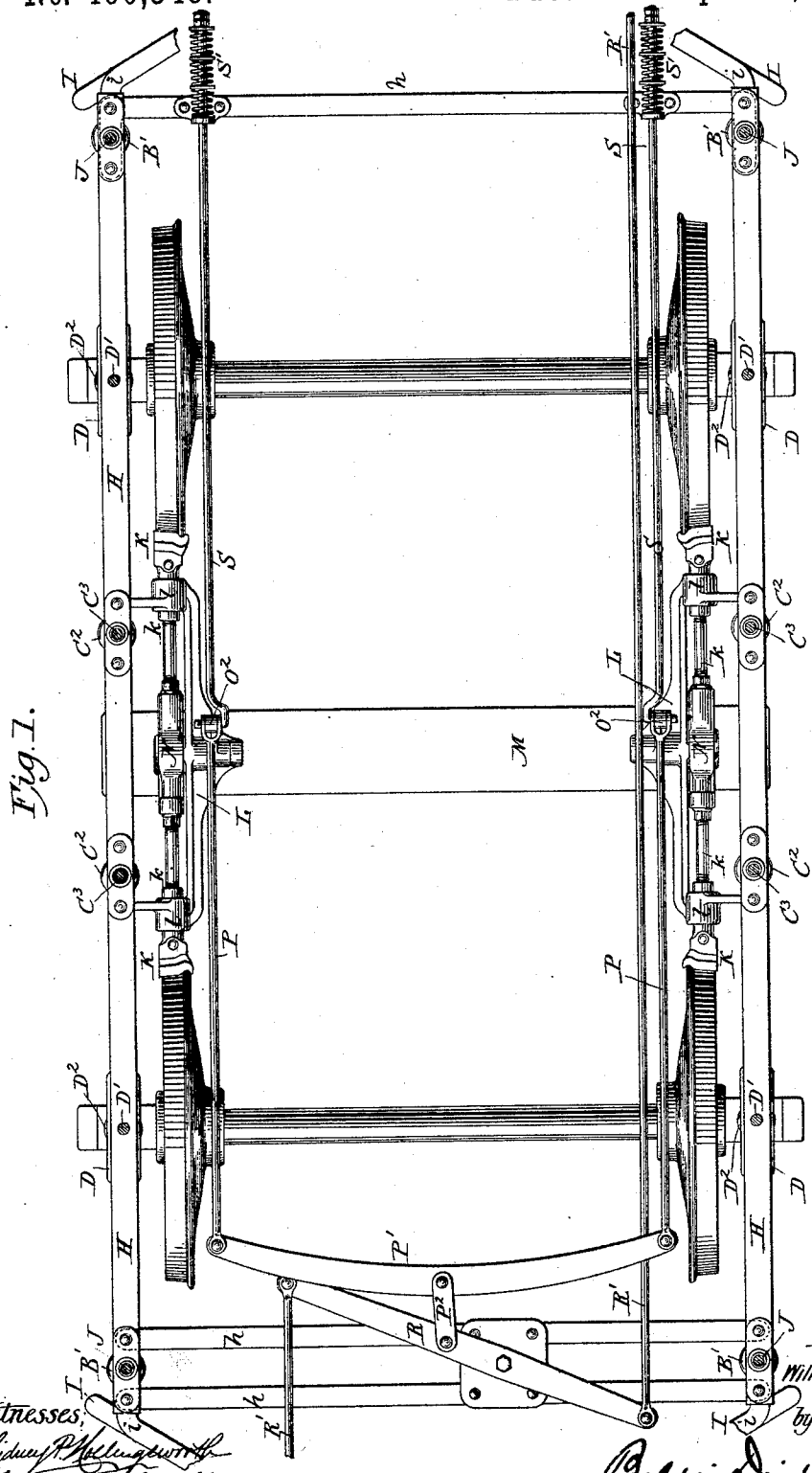

Fig. 1.

Witnesses,
Sidney P. Hollingsworth
B. Washington Miller.

Inventor;
William S. G. Baker
by his attorneys,
Baldwin, Davidson & Wight.

THE NORRIS PETERS CO., PHOTO-LITHO., WASHINGTON, D. C.

(No Model.) 2 Sheets—Sheet 2.

W. S. G. BAKER.

CAR TRUCK.

No. 460,348. Patented Sept. 29, 1891.

Fig. 2.

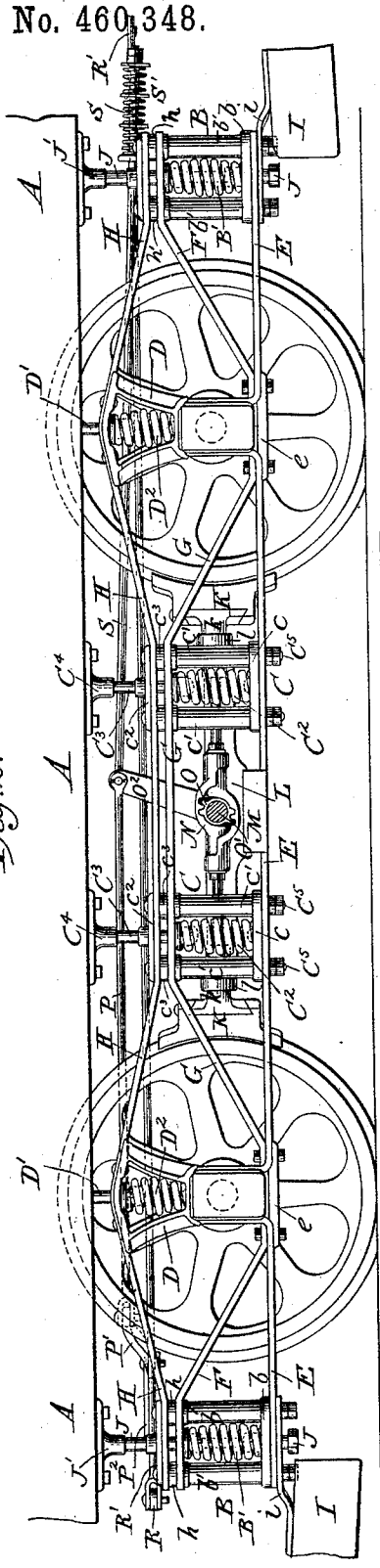

Fig. 3.

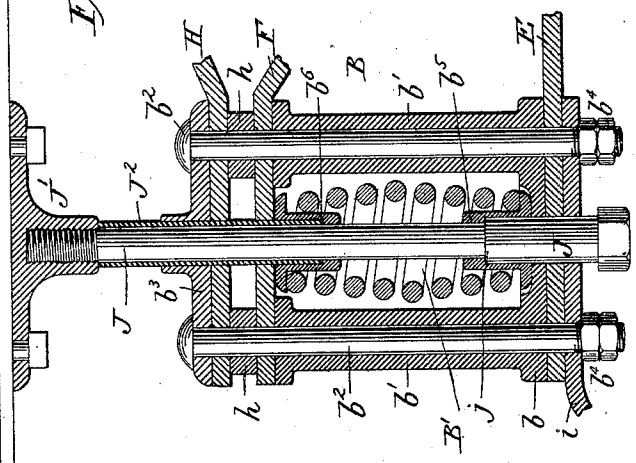

Witnesses
Sidney P. Hollingsworth
B. Washington Miller.

Inventor
William S. G. Baker
by his attorneys
Baldwin, Davidson & Wright.

THE NORRIS PETERS CO., PHOTO-LITHO., WASHINGTON, D. C.

UNITED STATES PATENT OFFICE.

WILLIAM SEBASTIAN GRAFF BAKER, OF BALTIMORE, MARYLAND.

CAR-TRUCK.

SPECIFICATION forming part of Letters Patent No. 460,348, dated September 29, 1891.

Application filed June 2, 1891. Serial No. 394,815. (No model.)

To all whom it may concern:

Be it known that I, WILLIAM SEBASTIAN GRAFF BAKER, a citizen of the United States, residing at Baltimore, State of Maryland, have invented certain new and useful Improvements in Car-Trucks, of which the following is a specification.

My invention more especially relates to the organization and construction of trucks for electric and cable cars. It involves certain improvements in the general organization of the truck-frame and the supports for the car-body, and in the mechanism for applying the brakes to the wheels.

A leading feature of my invention is a novel way of supporting the car-body, whereby its tendency to rise at one end when weighted at the opposite end is checked or relieved.

My improvements also check the tendency of the car-body to oscillate about its supports, thus relieving or avoiding the objectionable up-and-down motion at the ends of the car.

One way of embodying my invention which is the best now known to me is hereinafter fully described.

The accompanying drawings show so much of a car-truck embodying my improvements as is necessary to illustrate the subject-matter herein claimed.

Figure 1 is a plan view, and Fig. 2 a side elevation, of a car-truck embodying my improvements. Fig. 3 is a detail view in section and on an enlarged scale, illustrating one of the supports for the car-body.

In the drawings I have shown the car-body A supported on each side at six points on six coiled metallic springs, two being located directly over the axle-boxes, two on the truck-frame between the wheels, and two on the truck-frame outside the wheels. I prefer to employ this number of springs and to locate them in the manner indicated; but the precise arrangement or number is not essential. The springs which are carried by the truck-frame on the opposite sides of the axle-box are mounted in pedestals B and C, and the springs which are located over the axle-boxes are mounted in saddles D. A tie-rod E on each side of the truck extends over the axle-boxes and is secured to the pedestals. A short rod *e* is secured to the tie-rod under each axle-box to close the opening beneath it and hold the axle-boxes against vertical movement. By removing these rods *e* the wheels and axles may be readily withdrawn from the truck.

Braces F, secured to the tie-rod E, are secured to the tops of the pedestals B, and an arched brace G is secured to the tie-rod and to the tops of the pedestals C. A double arched tie-rod H, secured to the tops of the saddles D, is also secured to all the pedestals. Life-guards or fenders I are secured by rods or brackets *i* to the truck-frame beneath the pedestals B.

Headed bolts or feet D′, secured to the car-body and extending through the arched bar H and the tops of the saddles rest upon the springs D^2 mounted therein. The feet are free to move vertically in the saddles, being yieldingly supported by the springs. The pedestals C between the wheels are shown as each consisting of a base-piece *c* and two hollow uprights *c′*. Springs C^2 rest on the base-pieces *c* and support at their upper ends the headed ends of bolts or supports C^3, which extend through the brace G, tie-rod H, and the caps c^2. These bolts are secured at their upper ends to sockets C^4, attached to the car-body. Bolts C^5 extend through the uprights and the tie-rods and braces secured thereto, and through washers or spacing-rings c^3, which separate the brace G from the tie-rod H. The springs C^2 support the car-body yieldingly in the usual manner.

The supports thus far described will carry the car-body, but they will not prevent or check the objectionable up-and-down or oscillating motion at the ends of the car, which often occurs. Springs have heretofore been employed for supporting the car-body near its ends, but these springs have not been so arranged as to act from beneath as well as from above, or to exert a force under that end of the car-body which they support to prevent the upward movement thereof. In accordance with my invention, I provide means for accomplishing this result. The best way known to me is illustrated in the drawings; but I wish it understood that I do not limit myself to the details of construction now to be described.

Fig. 3 illustrates the details of construction of the supports outside the car-wheels for preventing the oscillation of the car-body. As there shown, the pedestal B is formed with a base-piece b and two hollow uprights b'. Bolts b^2 extend through the hollow uprights and through the braces and tie-rods connected therewith, the brace F and top tie-rod H being separated by the ends of the cross-bars h and spacing-rings h'. The heads of the bolts rest on a cap b^3, and the adjusting-nuts b^4 are located below the brackets of the life-guards. The supporting-spring B′ is mounted between the uprights b^2, its lower end resting on a flanged thimble b^5. The upper end of the springs carries a flanged thimble b^6. The supporting bolt or standard J at its upper end is secured to a screw-threaded socket J′, attached to the car-body, and it extends through the pedestal and the parts connected therewith. its lower end being enlarged and provided with a shoulder j, which rests against a shoulder in the thimble b^5. The upper end of the bolt is surrounded by a sleeve J^2, which extends into a seat in the thimble b^6. The bolt and sleeve are free to slide vertically against the force of the spring B′. The organization is such, as will be evident from inspection of the drawings, that the car-body is supported on the spring B′ by means of the sleeve J^2 and thimble b^6. Should the car-body at one end tend to rise out of its normal position, the bolt J^2 will rise with it and move upwardly the thimble b^5 against the force of the spring B′. The upward movement of the car is thus checked or relieved without any undue strain on the truck. I have shown four such supports for the car-body, two on each side, located at equal distances from the axles. The supporting devices carried in the pedestals C are also preferably located at equal distances from the axles, thus affording uniform and even supports at all points.

It will be observed that there is no yielding connection between the axle-boxes and the truck-frame in the construction shown in the drawings, the truck being held against any appreciable vertical movement relatively to the axles, while the car-body is yieldingly supported to give the cars ease and uniformity of action, and undue or objectionable vertical motion at the ends of the car is prevented.

The wheel-brakes which I preferably employ are in construction and operation similar in some respects to those shown in my patent, No. 426,096, of April 22, 1890; but instead of employing a rock-shaft extending from one side of the truck to the other I employ short shafts on each side and operate them by rods connected with a lever operated by a brake-wheel or other power. Each brake-shoe K is provided with a stem k, extending from a sleeve l, secured to or formed on a bracket L, attached to the side frame of the truck and to the cross-beam M thereof. The stems k are secured to curved rack-bars N, similar in construction to those in my patent above mentioned. These rack-bars on each side of the truck interlock and support each other and gear with a pinion O, secured to a short shaft O′, mounted in bearings in the bracket L. Each of the pinion-shafts is provided with a crank-arm O^2, to which is connected a rod P, secured to a rod-connecting beam P′, which is connected by a link P^2 to an operating-lever R. This lever may be connected by a rod R′ with the usual brake-wheel or other operating devices. The crank-arms O^2 are also connected with rods S, which extend in an opposite direction to that of the rods P and carry springs S′, which return the brakes to their normally-retracted position out of engagement with the wheels when the operating-lever is free. By this arrangement a clear space is left in the center of the truck, no rock-shaft extending across it, and no brake-beams for connecting the brakes on opposite sides of the truck being employed. This brake mechanism, while possessing the advantages just named, is also strong, durable, and efficient.

I claim as my invention—

1. A truck-frame secured to the car-axle boxes and held against a vertical movement relatively thereto, and yielding connections between the car-body and the truck-frame, which check the vertical movement of the end of the car-body to which they are secured.

2. The combination, with the wheels, axles, and axle-boxes, of a truck-frame carried by the axle-boxes and held against a vertical movement relatively thereto, and yielding connections between the car-body and the truck-frame, which check the vertical movement of that end of the car-body under which they are placed.

3. The combination, with the wheels, axles, and axle-boxes, of a truck-frame carried by the axle-boxes and held against a vertical movement relatively thereto, and yielding connections between the car-body and the truck-frame, which support the car-body and also check the vertical movement of the ends of the car.

4. The combination, substantially as hereinbefore set forth, of the truck-frame, the wheels, axles, and axle-boxes, saddles resting on the axle-boxes, springs mounted in these saddles and connected with the car-body, pedestals on opposite sides of the axles and carried by the truck-frame, springs mounted in these pedestals and supporting the car-body, and devices connecting the car-body with the springs in the pedestals for compressing said springs from beneath.

5. The combination, substantially as hereinbefore set forth, of a car-truck, a car-body, springs carried by the truck outside the wheels, bolts secured to the car-body and extending through the springs, sleeves loosely surrounding the bolts and supported on the springs, and connections between the bolts

and the lower ends of the springs, whereby when the bolts are raised the springs are compressed.

6. The combination, substantially as hereinbefore set forth, of a car-truck, a car-body, pedestals supported on the car-truck outside the wheels, springs mounted in these pedestals, bolts secured to the car-body and extending through the pedestals and springs, sleeves surrounding the bolts, thimbles into which the lower ends of these sleeves project and which are supported on the springs, and thimbles connected with the lower ends of the bolts and engaging with the lower ends of the springs.

7. The combination of the wheels, axles, and axle-boxes, the tie-rods extending over the axle-boxes, saddles mounted on the boxes, arched tie-rods secured thereto, pedestals between the wheels and outside thereof, secured to the tie-rods, braces or truss-rods secured to the pedestals and the tie-rods, springs mounted in the pedestals, and connections between these springs and the car-body.

8. The combination, substantially as hereinbefore set forth, of a car-truck, brake-shoes, their stems, rack-bars connected with the stems, pinions engaging therewith, short pinion-shafts provided with crank-arms, and operating-rods secured thereto.

9. The combination, substantially as hereinbefore set forth, of a car-truck, brake-shoes the stems of which extend through guides carried by brackets mounted on the truck, interlocking rack-bars, and means for operating them.

In testimony whereof I have hereunto subscribed my name.

WILLIAM SEBASTIAN GRAFF BAKER.

Witnesses:

C. W. KOHLMANN,

DANIEL W. POWELL.