June 28, 1966 W. H. LEWIS 3,257,917

ROAD BUILDING MACHINE

Original Filed April 2, 1962 3 Sheets-Sheet 1

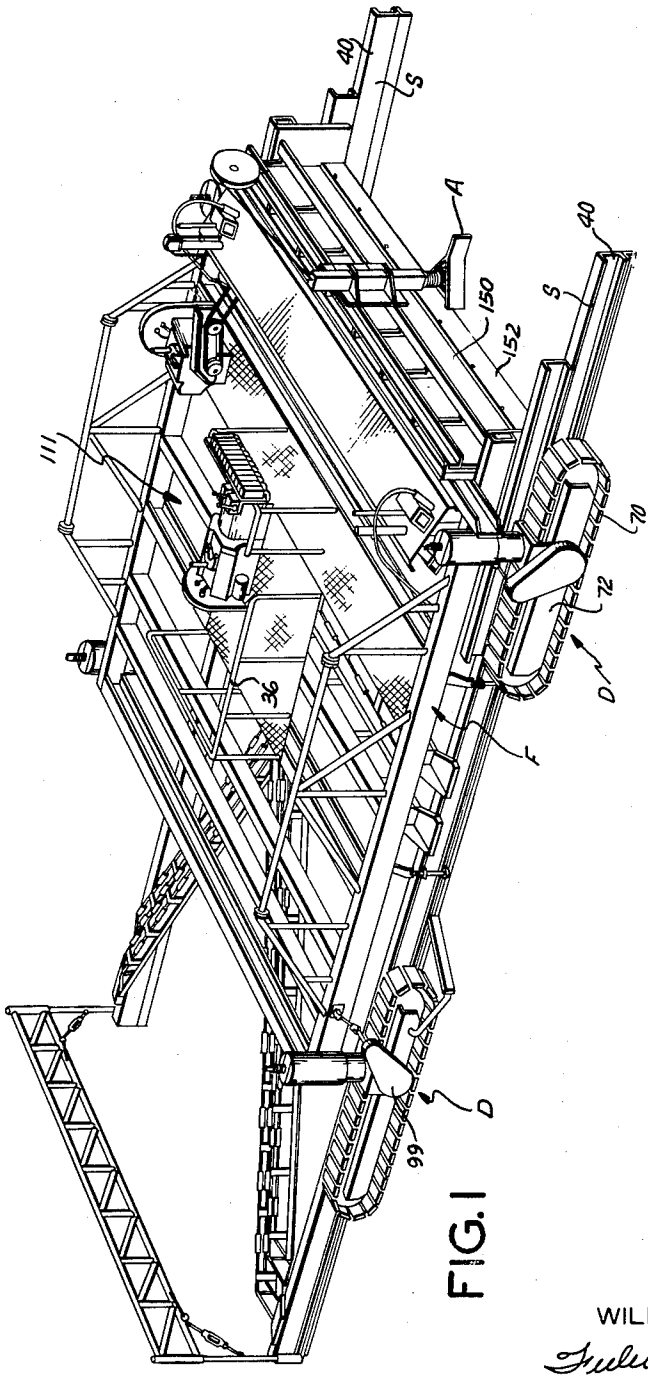

FIG. 1

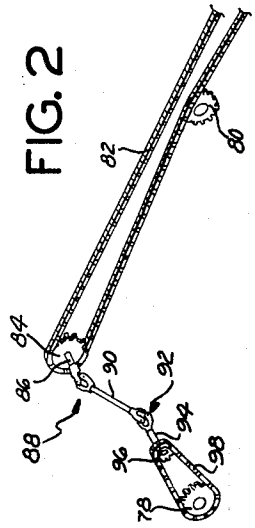

FIG. 2

INVENTOR.
WILLIAM HURST LEWIS

Fulwider, Patton, Rieber,
Lee & Utecht

ATTORNEYS

June 28, 1966 W. H. LEWIS 3,257,917

ROAD BUILDING MACHINE

Original Filed April 2, 1962 3 Sheets-Sheet 2

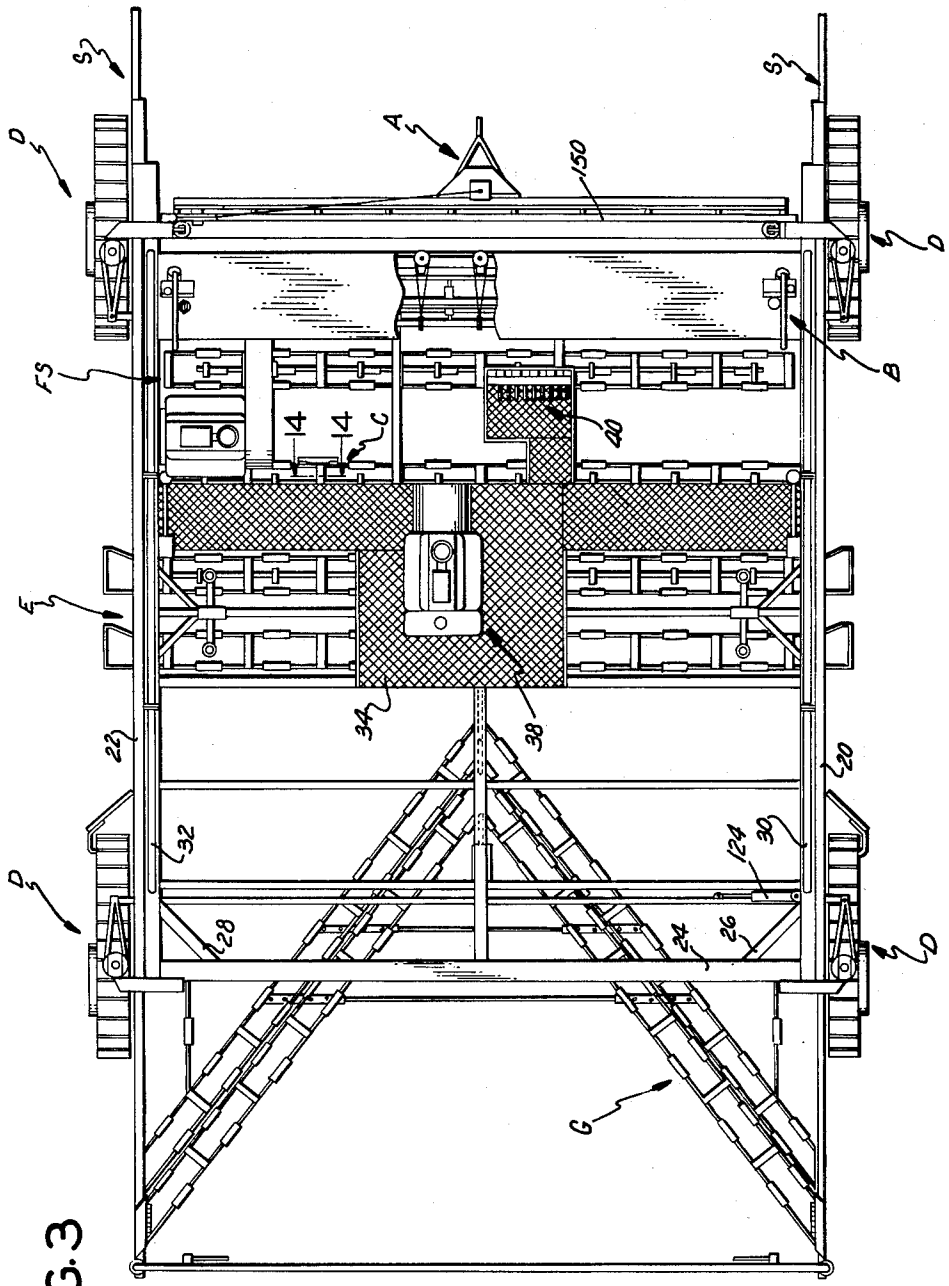

FIG. 3

INVENTOR.
WILLIAM HURST LEWIS

Fulwider, Patton, Rieber, Lee & Utecht

ATTORNEYS

June 28, 1966 W. H. LEWIS 3,257,917

ROAD BUILDING MACHINE

Original Filed April 2, 1962 3 Sheets-Sheet 3

FIG. 5

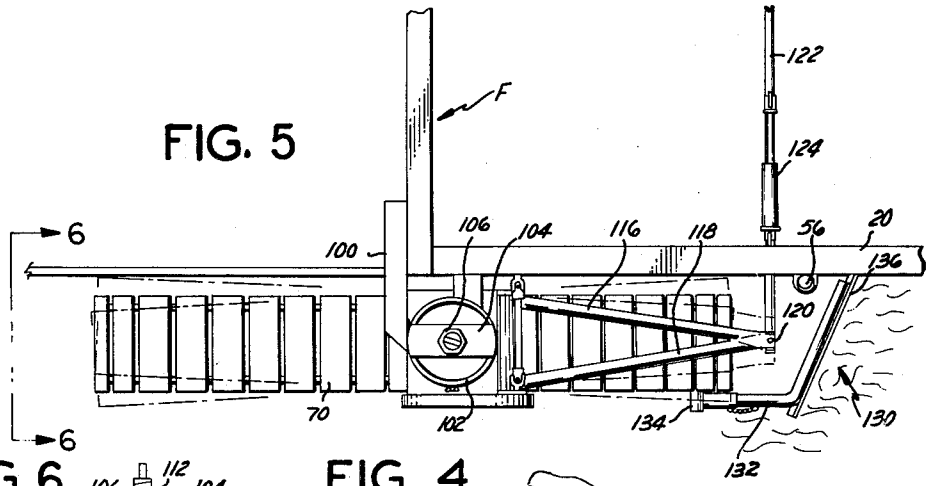

FIG. 6

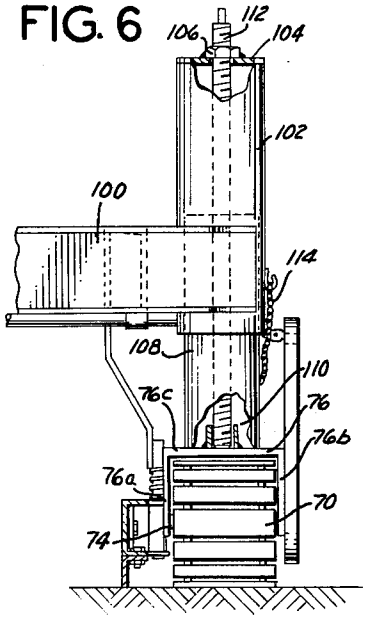

FIG. 4

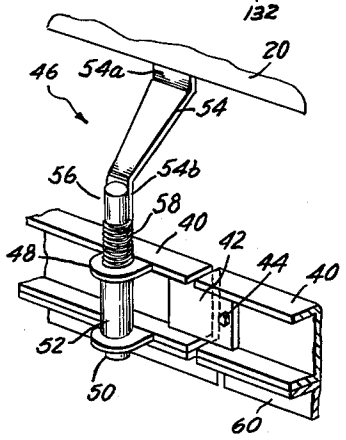

INVENTOR.
WILLIAM HURST LEWIS

Fulwider, Patton, Lieber, Lee & Utecht

ATTORNEYS

United States Patent Office 3,257,917 Patented June 28, 1966

3,257,917

ROAD BUILDING MACHINE

William H. Lewis, Arcadia, Calif.
(P.O. Box 3037, South Elmonte, Calif.)

Original application Apr. 2, 1962, Ser. No. 184,425. Divided and this application Mar. 29, 1965, Ser. No. 443,261

2 Claims. (Cl. 94—39)

This is a division of my co-pending patent application Serial No. 184,425, filed April 2, 1962.

The present invention relates generally to the art of road building and more particularly to a new and novel steering and powering arrangement for a road building machine.

In my co-pending patent application Serial No. 184,425 there is disclosed a caterpillar track-supported pavement finishing machine which carries its own spaced side forms, with such side forms moving over the roadway with the frame of the machine and between which the paving material is laid. This type of machine is known as a "slip form" finisher. In the use of such pavement finishers it is essential that the surface of the pavement be formed with great accuracy. In order to achieve this accuracy, such a machine is provided with a comparatively long frame. This frame supports reciprocating screed means at its intermediate portion. This arrangement insures that the screed means will remain at the desired elevation even though the roadway is not exactly level, since even though the front or the rear ground-engaging means of the machine passes over a roadway point that is not at a true elevation, the screed means being disposed between such ground-engaging means will be vertically displaced only slightly from the true elevation.

Where a caterpillar track-supported road building machine such as a pavement finisher is provided with a long frame, it is difficult to effect steering of the frame relative to the roadway. Such machines are usually provided with a single, long caterpillar type track arranged along each side of the frame, and steering is effected by braking one of such tracks as the other continues to moves. If, however, the road building machine has a long frame, the frame would be subject to excessive stress as it is steered in this manner. Also, the machine must be provided with considerable power in order that forward motion can be effected by only a single caterpillar track. It will likewise be apparent that it is difficult to accurately steer a long frame merely by braking one caterpillar track while permitting the other to advance.

It is a major object of the present invention to provide a long-frame road building machine that is supported by a plurality of pairs of self-powered caterpillar tracks, each of which tracks is individually steered.

It is another object of the present invention to provide a new and novel steering and powering arrangement for a road building machine that includes a pair of self-powered and individually steered caterpillar tracks mounted at the front and the rear of the frame of such road building machine.

A further object of the present invention is to provide a powering and steering arrangement for a road building machine which is relatively simple and inexpensive to manufacture but which is rugged and dependable in operation.

The novel features which I consider characteristic of my invention are set forth with particularity in the appended claims. The device itself, however, both as to its organization and mode of operation, together with additional objects and advantages thereof, will best be understood from the following description of specific

embodiments when read in connection with the accompanying drawings, in which:

FIGURE 1 is a perspective view of a pavement finisher that embodies the present invention, the steering means therefor being omitted;

FIGURE 2 is a fragmentary perspective view of a portion of the drive means for the subject apparatus;

FIGURE 3 is a top plan view of the finisher of FIGURE 1;

FIGURE 4 is a fragmentary perspective view of the mounting means for the slip forms;

FIGURE 5 is a fragmentary top plan view of one of the novel self-powered and individually-steered caterpillar track units of the present invention; and

FIGURE 6 is a rear elevational view taken substantially along line 6—6 of FIGURE 5.

Like reference characters indicate corresponding parts throughout the several views of the drawings.

General arrangement

Referring to FIGURES 1 and 3 of the drawings wherein is shown a preferred form of pavement finisher in accordance wth the present invention, it is noted that the subject apparatus comprises a plurality of different operating devices.

Generally, the subject finisher comprises a square or rectangular frame F which carries suitable motive power means M and appropriate controls therefor. Also attached to frame F are suitable drive mechanisms D for propelling the apparatus along the surface to be covered with concrete. Depending from the frame F is a pair of spaced slip-forms S which are dragged over the surface to be paved, and which define the width of the section of concrete being laid.

Proceeding from the forward end of the apparatus to the rearward end thereof, it is seen that there is provided a forward shovel A for moving the concrete transversely of the direction of movement of the apparatus. An agitator section B is provided in back of the forward shovel A for properly agitating the concrete to remove air pockets and accumulated aggregate. A forward screed FS is positioned behind the agitator section for suitably leveling the surface of the concrete as will hereinafter be explained. An intermediate shovel C is also provided, followed by a pair of finishing screeds E and a pair of V-shaped floats G for further smoothing the surface of the concrete. Details of the shovel A, agitator section B, forward screed FS, shovel C, screeds E, and floats G are more particularly set forth in my above-identified co-pending patent application Serial No. 184,425.

Frame F

The frame F is formed of side channel members **20** and **22** which are held in spaced parallel relation by transverse members including a forward channel member (not shown) and a rearward channel member **24**. Included in frame F are various other transverse support members and corner support members as shown at **26** and **28** all of which cooperate to provide a sturdy rectanguler frame on which is mounted most of the components and subassemblies to be hereinafter described. For providing additional rigidity and strength to frame F, strengthening frames **30** and **32** may be provided on the side members **20** and **22** respectively.

On top of frame F is mounted a "cat-walk" in the form of steel mesh **34** providing a place for one or more operators to walk and control the subject finishing apparatus. Suitable hand rail means as shown at **36** in FIGURE 1 may be provided as deemed necessary.

Motive power means in the form of an internal combustion engine **38** is also mounted on frame F for providing the necessary power for operating all of the various components to be hereinafter described. As part of the motive power means for the subject apparatus, there is provided a hydraulic pump driven by engine **38** for providing the necessary fluid pressure for operation of hydraulic actuators to be hereinafter identified. A plurality of control valves **40** are also mounted on the frame F for suitable manipulation by the operators of the apparatus in controlling the flow of fluid pressure to such actuators.

Slip-forms S

The slip-forms S are formed of a plurality of sections of U-shaped channel members **40** as shown most clearly in FIGURE 4 of the drawings. The channel members **40** are contiguously arranged and are held in such position by connectors **42** each of which is fastened to one of the channel members **40** by a bolt **44**. The connection as afforded by connector **42** is loose so as to permit relative movement between the channel members **40** during operation of the paving apparatus. This enables the side forms, as will hereinafter become more apparent, to generally conform to the changes in contour of the surface being provided with concrete.

At predetermined spaced intervals along either side of frame F are mounting means **46** whereby frame F is partially supported on the slip-forms. At such intervals, the channel members **40** are provided with a pair of outwardly extending tabs **48** and **50** having aligned openings. A section of pipe **52** is suitably welded to tabs **48** and **50** concentrically of the aligned openings therein.

A depending bracket **54** having a slight S shape has its upper end portion **54***a* welded to side channel member **20** of frame F. The opposite end portion **54***b* of bracket member **54** is welded to a section of pipe or rod **56** which extends downwardly through the aligned openings in the tabs **48** and **50** and through the pipe **52** therebetween. A helical compression spring **58** is interposed between the upper tab **48** and the lower end portion **54***b* of bracket **54** to provide means for resiliently supporting frame F and its associated components.

Attached to the underside of each channel member **40** is an L-shaped wear member **60** as by suitable fastening means such as bolts or the like. To permit wear members **60** to be readily and easily replaced, such fastening means should be of the type which can be conveniently disassembled in the field.

Wear plates **60** together with the channel members **40** provide slip-forms which offer a vertical surface against which the concrete can form so as to provide the desired vertical side walls for the section of concrete being laid. Such slip-forms, of course, are part of the pavement finisher and are carried thereby across the ground surface being provided with concrete. The wear members **60** are in scraping or sliding contact with the ground surface throughout the operation of the apparatus and hence are subject to considerable wear.

It is thus seen that the slip-forms S rest on the ground surface and are dragged therealong by appropriate drive means to be hereinafter described, while the frame F and all associated equipment are partially supported by such slip-forms and resilient mounting means **46**. Thus, the heavy frame and other equipment provide sufficient weight for firmly holding the slip-forms in contact with the ground surface.

The novel drive means D

The preferred form of drive mechanisms employed in the road building machine shown in the drawings comprises two drive mechanisms D on each side of the apparatus. Each such drive means comprises an endless caterpillar-type track **70** which is suitably mounted on substantially centrally located drive gears and forward and rearward idler gears, no one of which gears is shown in the drawings. The endless track **70** is mounted on or formed integrally with one or more endless chains which cooperate with the drive gears and idler gears so as to be driven over the ground surface. Such gear members, however, are suitably mounted on a support member **72** in a manner common to devices or machines which presently employ caterpillar-type drive means.

The substantially centrally located drive gears are keyed to a drive shaft **74** which is rotatably mounted in an inverted U-shaped yoke **76**. Yoke **76** is formed with a pair of depending side members **76***a* and **76***b* which are joined together by an intermediate horizontal member **76***c*. Shaft **74** is suitably journaled in the depending side members **76***a* and **76***b* and carries a gear member **78** adjacent the side member **76***b*.

As shown most clearly in FIGURE 2 of the drawings, gear member **78** is driven by a drive gear **80** which is mounted adjacent the inner side wall of one of the side channel members of frame F. Drive gear **80** is suitably keyed to a drive shaft (not shown) which is rotated by internal combustion engine **38**.

The power transmission means of FIGURE 2 is used for driving the rearward drive mechanism D as shown in FIGURE 1. Accordingly, the shaft to which gear member **80** is keyed extends transversely of the apparatus and terminates adjacent the inner surface of channel member **20** of frame F. An elongated endless chain **82** is driven by gear member **80** and cooperates with a gear member **84** suitably journaled in channel member **20** near the rearward end portion thereof and also with a like gear member (not shown) near the forward end portion of said channel member **20**. Whereas the gear member **84** drives the caterpillar-type drive mechanism near the rear end portion of channel member **20** the above-mentioned corresponding gear member is part of the drive means for the drive mechanism D located near the forward end portion of channel member **20**.

As shown in FIGURES 1 and 2, gear member **84** is keyed to a shaft **86** which carries one-half of a universal joint **88**. The other half of universal joint **88** is connected to an intermediate shaft **90**.

In order to provide another horizontal shaft parallel to the shaft **86**, an additional universal joint **92** is utilized for connecting intermediate shaft **90** to a horizontal shaft **94**. Keyed to shaft **94** is a gear member **96** which cooperates with an endless chain **98** to transmit power to gear member **78**.

In FIGURE 1, the gear members **78** and **96** and drive chain **98** are covered by a shroud or protective shield **99**.

It is thus seen that power from internal combustion engine **38** is transmitted to gear member **80** located adjacent channel member **20** of frame F and to a similar gear member adjacent the inner surface of channel member **22** on the opposite side of frame F. The gear member **80** drives endless chain **82** so as to simultaneously actuate the two drive mechanisms D on the right-hand side of frame F. In similar fashion, the drive mechanisms on the left-hand side of frame F are simultaneously driven by internal combustion engine **39**.

Referring specifically to the drive means shown in FIGURE 2, it is seen that the chain **82** causes gear member **84** to drive the shafts **86**, **90** and **94** so as to drive gear member **78** through gear member **96** and chain **98**. In this manner, the drive shaft journaled between the side members of yoke **76** is rotated so as to rotate the drive gears for the caterpillar-type track.

It is thus seen that the four caterpillar-type drive mechanisms D are simultaneously actuated to propel the pavement finisher. By suitable manipulation of the controls near the engine **38**, an operator can cause the apparatus to move forward or in a reverse direction as desired.

Each drive mechanism D is suitably fixed with respect to frame F such that the relationship therebetween can be varied by suitable adjustment means. This enables

the operators of the apparatus to control the amount of weight supported by the drive mechanisms and the amount of weight of the apparatus supported by the above-described slip-forms. In this manner, the desired sliding action of the slip-forms over the ground surface can be provided.

The adjustable connection between the drive mechanisms D and the frame F is shown most clearly in FIGURES 1, 5 and 6 of the drawings. Attached to frame F as by welding or the like, is a U-shaped channel member **100**. Channel member **100** extends outwardly from the side of frame F and has welded to the extended end portion thereof a section of a vertical column such as cylindrical pipe **102**. Across the upper end portion of pipe section **102** is a strap **104** which is welded to pipe section **102**. Strap **104** is provided with a through opening over which is coaxially positioned a fastening nut **106**. Nut **106** is welded to strap **104** as shown in FIGURE 10.

Telescopically fitted within the lower end portion of pipe section **102** is a cylindrical hollow pipe or column **108**. The lower end portion of pipe **108** is attached to the intermediate member **76***c* of yoke **76** as by welding or the like. A retainer **110** in the form of a smaller pipe section is also welded to yoke **76** concentrically of and within pipe **108** as shown most clearly in FIGURE 6. An adjustment screw **112** the upper end portion of which is square or hexagonally shaped to be gripped by a wrench, is inserted within the telescopically connected pipe sections **102** and **108**. Screw **112** is threaded into nut **106** and has its lower end portion positioned within retainer **110**. As will be readily apparent to those skilled in the art, this arrangement permits an operator to turn adjustment screw **112** relative to nut **106** to thereby vary the relative position of the particular drive mechanism D with respect to frame F. To prevent separation of the telescopically connected members **102** and **108** in the event the pavement finisher is lifted, there is provided a loose fitting chain **114** the opposite ends of which are individually connected to said members **102** and **108**.

For steering each of the drive mechanisms D there is provided a pair of steering arms **116** and **118** joined together as at **120**. The opposite end of each of the arms **116** and **118** is operatively coupled to yoke **76** in any suitable manner, as will be apparent to those skilled in the art.

A steering tie rod **122** extends transversely of the frame F of the pavement finisher and has its opposite ends connected to the steering arms **116** and **118** of one of the pair of oppositely disposed drive mechanisms D, and a similar steering tie rod is similarly connected to the other pair of the mechanisms D.

A hydraulic cylinder **124** is connected between side member **20** frame F and the right-hand portion of the steering rod **122**, as viewed in FIGURE 3, so as to effect reciprocatory movement thereof in accordance with the steering action to be effected. Hydraulic actuator **124** is, of course, connected by suitable flexible conduits to the hydraulic pump which is actuated by internal combustion engine **38** as above described. Control over the hydraulic actuator is provided by suitable means mounted near the engine **38** in a conventional manner. Thus, as actuator **124** causes steering rod **122** to move upwardly relative to FIGURE 5, the steering arms **116** and **118** cause the rear pair of caterpillar tracks **70** to be rotated about pipe section **102** in a counterclockwise direction. Conversely, of course, as actuator **124** moves rod **122** downwardly relative to FIGURE 5, the rear pair of tracks **70** are rotated in a clockwise direction. The front pair of caterpillar tracks **70** are of like construction and are steered in the same manner as the rear pair of caterpillar tracks. As will be apparent, the connections of the opposite ends of the arms **116** and **118** to the yoke **76** and the steering rod **122**, respectively, and the support of the rod **122** by the frame F are such that accommodation is made for the swinging of arms **116** and **118** both during steering of the tracks and during vertical movements of the tracks relating to the frame F. Various means for accomplishing such accommodation will immediately suggest themselves to those skilled in the art and, accordingly, a detailed description thereof is omitted for brevity.

Mounted in front of each of the rear drive mechanisms D is a deflector **130** for deflecting out of the path of the respective drive mechanism any concrete which, in the course of the finishing operations to be described, is caused to be forced beyond the above-described slip-forms. Such deflector, as shown in FIGURE 5, comprises a suitably angled rod **132** which is rotatably mounted on support member **72** of such drive mechanism by means of a suitable fitting **134**. A deflector blade **136** is welded to rod **132** as shown in said FIGURE 5, said blade thereby being disposed at an angle with respect to the direction of travel of the apparatus and extending from adjacent the side form to a point beyond the path of the respective drive mechanism. As shown most clearly in FIGURE 3 of the drawings, each of the rear drive mechanisms D is provided with a reflector **130**.

Operation of apparatus

The above-described pavement finisher operates generally as follows.

The subject apparatus is self-propelled by the motive power means M. Thus, with such means in operation, the entire apparatus can be caused to move in a forward direction along the surface to be covered with concrete. During such movement of the apparatus, fluid concrete is poured between the forward end portions of the slip-forms S, immediately forward of the shovel A. Such pouring apparatus may take substantially any desired form and may include a strike-off member for generally leveling the fluid concrete between the slip-forms.

The forward shovel A is caused to move back and forth laterally of the direction of movement of the apparatus, as more particularly set forth in my previously identified patent application Serial No. 184,425.

Immediately behind shovel A is a strike-off member **150**, the strike-off edge **152** thereof engaging the fluid concrete and leveling the same to a predetermined depth.

Following the strike-off blade **150** is the agitator section B to disperse any accumulation of aggregate materials and any air pockets which might tend to weaken the resulting concrete structure.

Immediately behind the agitator section B is the forward screed FS which operates in the manner fully explained in my co-pending patent application Serial No. 673,450.

Behind the forward screed FS is the intermediate shovel C which is caused to move laterally of the direction of movement of the apparatus in order to move concrete to one side or the other of the frame F.

Thus, in the laying of concrete along a banked turn of a roadway, there is a tendency for the concrete to flow down toward the lowest point of the banked turn. To compensate for this, the intermediate shovel C can be used to push the concrete from the lowest point toward the highest point of the turn.

Immediately behind the intermediate shovel C are the finishing screeds E which "work" the concrete surface to facilitate provision of an even finish to the entire pavement by the floats G. As fully explained in my co-pending application Serial No. 673,450, such finishing screeds may be provided with a vibratory action as by means of suitably eccentrically arranged weights. In any event, such finishing screeds E have an oscillatory motion so as to effect "working" of the surface of the concrete so as to cause the heavier aggregate to sink beneath the surface of the resulting pavement.

To the rear of the finishing screeds E are the V-shaped floats G which are dragged across the surface of the concrete for further providing a flat smooth finish.

If desired, sections of wet burlap material can be suspended from at the rear of the apparatus to provide a burlap finish to the pavement.

It should be particularly noted that throughout the aforedescribed operation of the subject apparatus, the slip-forms S are dragged along the surface to be covered with concrete. They provide the side structures for providing the vertical sides for the resulting pavement. Such arrangement eliminates the need for stationary forms which heretofore have necessitated considerable time and effort in the formation of relatively long sections of concrete. Such slip-forms, as above explained, are made in various sections **40**, as shown in FIGURE 4, which are movable with respect to each other so as to conform to the variations in the surface of the ground.

The drive mechanisms B are driven from the source of motive power M by transmission means as shown in FIGURE 2. This arrangement causes the endless tracks **70** of the four drive mechanisms to operate so as to move the entire apparatus as desired.

It should be particularly noted that because of the length of the frame F the screeds E will always tend to remain at a true level even though the front and rear caterpillar tracks pass over a section of the roadway that is not at a true grade. This results from positioning these screeds at approximately one-half the distance between pipe sections **102** that support the front and rear caterpillar tracks **70**. With this arrangement, assuming the front track **70** moves over a point in the roadway that is one quarter inch higher than the true grade, the screeds will only be raised about half this distance. The long frame F can be easily steered to follow the roadway by means of the independently-steered and self-powered caterpillar track units **70** mounted at each corner of the frame.

Although I have shown and described certain specific embodiments of my invention, I am fully aware that many modifications thereof are possible. Thus, although the novel self-powered and individually-steered caterpillar track units are shown and described herein in connection with a pavement finisher, such units may also be advantageously employed with other types of road building machines, such as graders, road base preparing machines, and also canal building machines. My invention, therefore, is not to be restricted except insofar as is necessitated by the prior art and by the spirit of the appended claims.

I claim:

1. In a road building machine mounting plow, screed, shovel, or like apparatus for road building purposes, the combination of:

a generally rectangular, relatively long frame;

a first pair of endless track units mounted to said frame adjacent the front corners thereof, and a second pair of endless track units mounted to said frame adjacent the rear corners thereof, each of said units being pivotable about a vertical axis;

a plurality of means for raising and lowering said units relative to said frame and independently of one another whereby the elevation of the four corners of said frame are independently adjustable;

power means carried by said frame and coupled in driving relation to all of said units for simultaneous operation of said units;

a plurality of elongated steering arms, each operatively coupled at one of its extremities to a separate one of said units;

elongated first tie rod means operatively coupled at opposite ends thereof to the other extremities of the steering arms which are coupled to said first pair of units, and laterally movable for simultaneously pivoting said first pair of units about vertical axes;

elongated second tie rod means operatively coupled at opposite ends thereof to the other extremities of the steering arms which are coupled to said second pair of units, and laterally movable for simultaneously pivoting said second pair of units about vertical axes;

first means carried by said frame and coupled to said first tie rod means and operable to move said first tie rod means laterally and thereby pivot said first pair of units in common;

second means carried by said frame and coupled to said second tie rod means and operable to move said second tie rod means laterally and thereby pivot said second pair of units in common; and

means operable independently of said operation of said units by said power means to selectively actuate said first and second means whereby said machine is steerable along a curved path without any necessity for speed adjustment or stoppage of any of said track units.

2. The combination of claim **1** wherein said first means and said second means each includes a hydraulic cylinder coupled between said frame and the associated one of said first means and said second means, and said last-mentioned means includes a hydraulic pump for supplying hydraulic fluid to each said hydraulic cylinder.

References Cited by the Examiner

UNITED STATES PATENTS

2,976,783	3/1961	Perkins	94—46 X
3,054,334	9/1962	Barber	94—46

FOREIGN PATENTS

615,775	3/1961	Canada.
751,857	4/1953	Germany.
503,932	4/1939	Great Britain.

JACOB L. NACKENOFF, *Primary Examiner.*