Feb. 21, 1961 R. C. OPPER 2,972,739

PORTABLE SAFETY LIGHT

Filed July 7, 1959

FIG. 1.

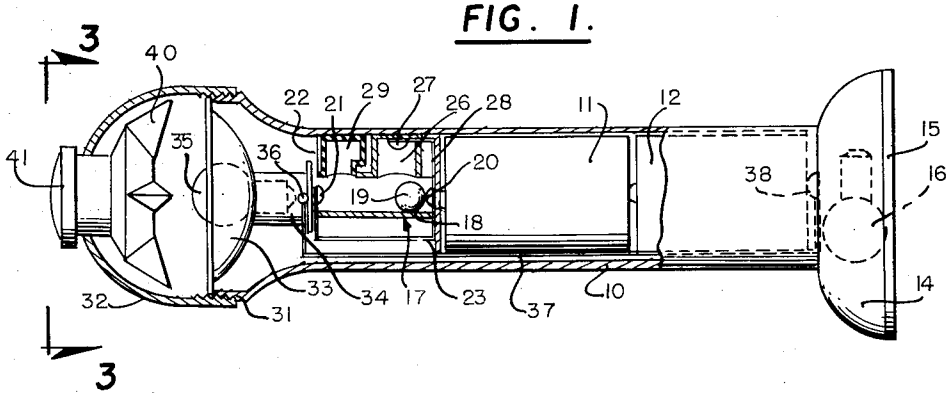

FIG. 5.

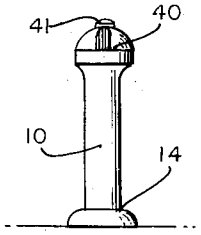

FIG. 2.

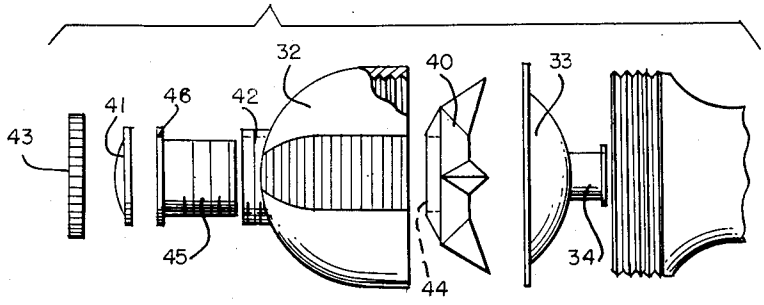

FIG. 3.

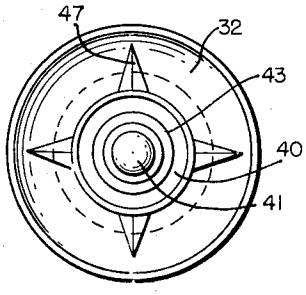

FIG. 4.

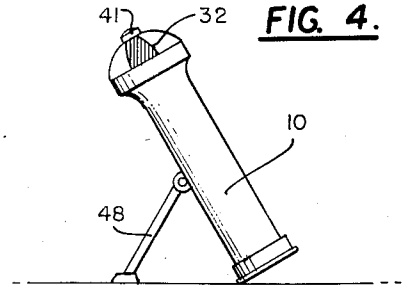

INVENTOR

Ray C. Opper

United States Patent Office 2,972,739 Patented Feb. 21, 1961

2,972,739

PORTABLE SAFETY LIGHT

Ray C. Opper, 3735 Laguna Ave., Oakland 2, Calif.

Filed July 7, 1959, Ser. No. 825,453

1 Claim. (Cl. 340—321)

This invention relates to a portable safety light resembling a flashlight.

It is the principal object of the present invention to provide a safety light which can be carried and swung so as to cause a flashing of the light as one walks therewith.

It is another object of the invention to provide in a flashlight a simple mechanical ball means that will move as the safety light is swung from one direction to the other to turn on the light at the end of each swing.

It is another object of the invention to provide in a safety light ball means that can be positioned to roll between contacts to turn the light on and off, or can be rolled to a compartment for maintaining the light in the "on" position, or can be positioned within an insulated chamber to hold the ball from engagement with the contacts as when the safety light is not in use and thereby eliminating the need for an external switch.

It is a further object of the invention to provide in a safety light which will impart a dazzling reflection in all directions means for a concentrated lens light through the end of the safety light.

Other objects of the invention are to provide a safety light having the above objects in mind, which is of simple construction, has a minimum number of parts, light in weight, of pleasing appearance, easy to operate, efficient and effective in use.

For a better understanding of the invention, reference may be had to the following detailed description taken in connection with the accompanying drawing, in which

Figure 1 is a side view of the safety light embodying the features of the present invention with portions broken away to show the interior construction thereof,

Fig. 2 is a side exploded view of the forward end assembly,

Fig. 3 is an end view looking from the forward end of the light and as viewed generally on line 3—3 of Fig. 1,

Fig. 4 is a side elevational view of the light in its operable position and supported in an inclined manner by an easel, and

Fig. 5 is a full elevational view of the light resting upon its rear end.

Referring now to the figures, **10** represents a tubular body for containing battery elements **11** and **12** that can be fitted into the rear end thereof through base **14** large enough to support the light on end as shown in Fig. 5 and having a removable bottom **15**. The base is large enough to contain a lamp bulb **16**. Also within the body **10** is a ball switch assembly **17** having a longitudinal extending sleeve **18** in which a contact ball **19** can roll between a contact **20** on the battery **11** and a contact **21** on a partition **22**. The contacts **20** and **21** are connected together by a conductor **23**. Leading laterally from the sleeve **18** is a pocket **26** into which the metal ball **19** may roll for engagement with a contact **27** therein at times when it is desired to keep the ball against rolling movement and yet have the light circuit closed. The

contact **27** is connected by a conductor **28** with the contact **20** on the terminal battery **11**. When it is desired to have the ball in a position so that no contact is made it is rolled into an insulated retaining pocket **29** adjacent the pocket **26** and lying thereabout.

The upper end of the tubular body **10** is flared and threaded at **31** to receive a transparent cap **32** which when fixed thereto will secure therebetween a reflector **33** having a socket **34** into which a lamp bulb **35** is removably connected. The contacts **20**, **21** and **27** are insulated upon the walls of the assembly **17** so that the ball establishes a circuit upon engaging the contacts into the sleeve assembly. The contact **20** engages with the central terminal of the battery **11** and is electrically connected with contacts **21** and **27**. The lamp socket **34** is grounded with the sleeve **18** and the center terminal of the socket is connected from a socket contact **36** through a wire **37** and contact **38** at the lower end of the body that engages the bottom of the battery **12**. As the ball **19** engages any one of the contacts **20**, **21** or **27** the circuit will be closed to light the lamp bulb **35**, the sleeve **18** being grounded with the socket sleeve **34** so that current will be extended through the lamp bulb.

As the safety light is carried in the hand it can be moved so as to connect the ball to move between the contacts **20** and **21** and thus cause the lamp bulb **35** to be flashed on and off with the swing motion of the arm while the light is being carried. When it is desired to have the light on permanently the light is rolled in the hand so that the opening **26** receives the ball and engages contact **27** to close the circuit. When it is desired to keep the light off the ball **19** is rolled into the insulating chamber **29**.

The cap **32** carries a light reflecting element **40** that will extend in all directions. This element has a mirror or dazzling effect so that broken rays are reflected outwardly to glitter through the cap **32** while direct rays pass centrally through the same and through lens **41** held in place upon a central sleeve portion **42** of the cap **32** and against the end thereof by a retaining ring **43**. The element **40** is internally threaded at **44** to receive a transparent threaded locking sleeve **45** that extends through the sleeve portion **42** and when tightened will bring the element **40** into tight engagement with the interior of the cap **32**, the retaining ring **43** fits over a flange **46** of the threaded sleeve **45** to hold the lens **41** thereagainst and the ring **43** against the sleeve portion **42**.

The cap **32** is half red and clear white arranged in stripes and the sleeves **45** also has alternate inclined red and white stripes. The clear light shines on the one carrying the light while the red light will face the traffic as the carrier crosses the street.

The element **40** has radially-extending light reflecting projections **47** angularly spaced therearound to reflect the light which will penetrate the transparent cup **32** and render a dazzling effect while at the same time light penetrating the lens **41** can be put to the same use as a flashlight.

The light may be stood on its base as illustrated in Fig. 5 or an easel **48** may be used to permit the same to be inclined. In both of these instances a permanent light is established.

It should now be apparent that by swinging the light as when carried by the arm a flashing can be effected or by turning the same over to put the ball in the pocket **26** a permanent light can be had while the light is being carried. To put the ball in the insulated pocket **29** the light will be turned off.

There is no desire to be limited to the exact details as being shown and described as these may be varied within the scope of the appended claim without departing from the spirit of the invention.

What is claimed is:

A safety light reflector for attaching to a battery operated flashlight comprising a transparent cap divided into stripes of red and white disposed alternately around the cap, a light reflecting element disposed in said cap and having radially extending projections extending to the sides of the cap, a threaded hole formed centrally through said element adapted to be engaged by a locking sleeve which rotatably projects through an opening in the end of the cap, a lens mounted on the outer end of the locking sleeve and a retaining ring adapted to secure said lens against said sleeve, whereby some of the light emitted from the flashlight bulb will pass through said locking sleeve and be focussed into a concentrated beam by said lens, and whereby further light from the bulb is reflected by the radially extending projections of the reflector and is transmitted through the red and white stripes of said transparent cap.

References Cited in the file of this patent

UNITED STATES PATENTS

1,816,065	Weidman	July 28, 1931
2,070,472	Criswell	Feb. 9, 1937
2,493,491	MacMahon	Jan. 3, 1950

FOREIGN PATENTS

102,426	Great Britain	Dec. 7, 1916