Jan. 5, 1937. L. C. RIAL 2,066,645

COMBINATION FINDER FOR LOCKS

Filed Oct. 28, 1935

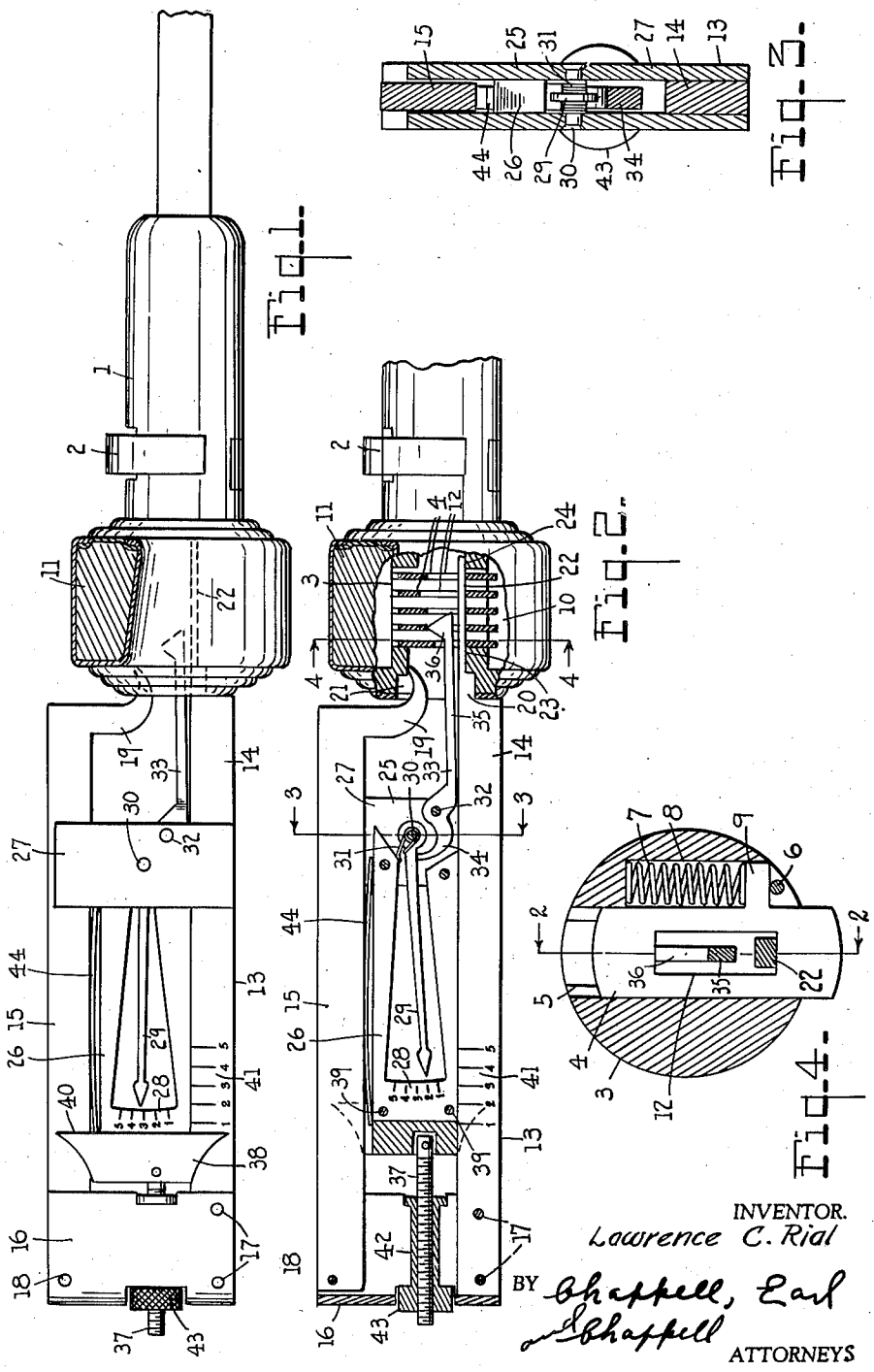

Fig. 1.

Fig. 2.

Fig. 3.

Fig. 4.

INVENTOR.
Lawrence C. Rial
BY Chappell, Earl & Chappell
ATTORNEYS

Patented Jan. 5, 1937

2,066,645

UNITED STATES PATENT OFFICE

2,066,645

COMBINATION FINDER FOR LOCKS

Lawrence C. Rial, Battle Creek, Mich.

Application October 28, 1935, Serial No. 46,976

16 Claims. (Cl. 33—174)

The main objects of this invention are:

First, to provide an instrument by means of which the pitch of tumbler engaging portions of a key suitable for a particular lock may be readily ascertained so that a suitable key or keys may be manufactured.

Second, to provide a combination finder having scales by means of which data pertinent to any lock of the tumbler type may be readily ascertained to the end that lost or mislaid keys for such locks may be replaced.

Third, to provide a device of the type described, which is simple in operation and construction and is characterized by the accuracy thereof.

Objects relating to details and economies of the invention will appear from the description to follow. The invention is defined and pointed out in the claims.

A structure which is a preferred embodiment of the invention is illustrated in the accompanying drawing, in which:

Fig. 1 is a side view of the instrument of the invention shown in its operative position in a lock, portions of which are in section.

Fig. 2 is a view in section along the line 2—2 of Fig. 4.

Fig. 3 is an enlarged end elevational view in section along the line 3—3 of Fig. 2.

Fig. 4 is an enlarged sectional view taken on line 4—4 of Fig. 2.

The device or instrument of my invention is invaluable to locksmiths inasmuch as it furnishes means for readily ascertaining data concerning any lock, the key of which may have been lost or mislaid. I have illustrated an embodiment of my invention adapted for gauging the pitch of successive tumbler engaging portions of a key. Tumbler locks of the type illustrated are well known, and usually have five tumblers. It will be understood that my instrument is readily adaptable with slight modification in proportion for use in connection with locks having a greater number of tumblers.

In the drawing, reference numeral 1 indicates in general the conventional lock assembly having a latch operating cam 2 and a cylinder 3 rotatable in a bore in the lock. Tumblers 4, which are five in number, slide in ways 5 in the cylinder, being resiliently urged against a stop 6 by a coil spring 7 in a recess 8 in the cylinder. The coil spring coacts with a lug 9 formed on the side of tumbler 4. In the position illustrated in Fig. 4, the tumbler is thrust outwardly from the periphery of the cylinder into locking engagement with a groove 10 in the body 11 of the lock.

The construction just described is well known and need not be further referred to. Tumblers 4 are provided with apertures 12 of varying heights so that when the proper key is inserted into the lock the tumblers will be raised from groove 10 by successive portions of the key so that the cylinder 3 may be turned.

The instrument of my invention comprises a lock engaging frame member indicated generally by the reference numeral 13, the frame member consisting of a lower lock engaging bar or arm 14 and an upper lock engaging bar or arm 15. The arms are connected together by a U-shaped plate 16, arm 14 being rigidly attached thereto by rivets 17 or other suitable means, while the arm 15 is pivoted to the plate 16 at 18. The arms are provided at the free ends thereof with lock engaging fingers or extensions 19 and 20, the extension 19 being in the form of a depending hook to engage the upper side of key opening 21 of the lock, whereas extension 20 is in the form of a horizontally projecting stepped or shouldered finger 22 which engages with ledges 23 and 24 of cylinder 3 and functions as a registering means for the tumblers inasmuch as it extends through the apertures 12 thereof, as illustrated in Figs. 2 and 4, and holds them against upward movement during the gauging process to be hereinafter described.

Slidable between the arms 14 and 15, I provide an adjustable gauging member 25 consisting of a U-shaped element 26 joined at the ends thereof to a pair of guide plates 27 arranged outside of the arms 14 and 15. Element 26 at the end thereof opposite plates 27 carries a pitch scale 28 suitably calibrated to indicate the relative dimensions of the apertures 12 of the tumblers 4, as determined by feeler means to be described. Between the plates 27, I pivot an indicating pointer 29 to cooperate with the scale 28. The pointer 29 is resiliently urged in a counterclockwise direction about the pivotal axis 30 thereof by means of a spring 31 coiled about the pivot 30 and engaging the element 26 and the pointer. At 32 I pivot a gauge finger 33 having an indicator engaging tail portion 34 and an oppositely extending gauging portion 35 provided with a gauging nose 36 which is resiliently thrust upwardly against the upper side of apertures 12 in tumblers 4, while the finger extension 22 engages the lower side of the apertures. By such an arrangement, the relative heights of the apertures may be determined and read off quickly and readily from the scale 28, inasmuch as the tail portion 34 of the gauge finger 33 transmits the movement of the nose 36 to the pointer 29.

For the purpose of moving the gauging member longitudinally between the arms 14 and 15 to gauge succeeding tumblers, I provide a screw 37 fixed to a member 38 which is fastened to the element 26 by rivets, screws or other means 39. The member 38 is provided with straight edge portions 40 and the lower arm 14 has calibrations 41 thereon spaced at intervals correspond-

ing to the spacing of the tumblers 4. The U-shaped plate 16 has journaled therein a rotatable internally threaded nut 42 held against movement with respect to the plate 16 and provided at the outer end thereof with a knurled handhold portion 43.

Between the upper pivoted arms 15 and gauging element 26, I interpose a leaf spring 44 for the purpose of resiliently urging the arms 15 and 14 apart so that the lock engaging portions 19 and 20 thereof may be held in operative relation to the lock.

From the above description, it is believed that the method of use of my instrument should be clear. However, it may be briefly summarized as follows: With the device inserted in the lock, as shown in Fig. 2, the nut 43 is rotated to advance or retract the gauging member 25, whereby to bring the nose 36 into cooperative relation with successive tumblers 4 as determined by the reading of the markings 41 on the arm 14. In each successive position, the height of the tumbler aperture 12 may be found indicated by the pointer 29 on the scale 28. The instrument is inserted in a lock by pressing the arms 14 and 15 together and placing extensions 19 and 20 in engagement with the lock opening.

The instrument of my invention is simple in use, yet exceedingly efficient in operation. Due to the simplicity of structure thereof, the manufacturing cost is very low and the instrument is readily portable.

I have illustrated and described my improvements in an embodiment which I have found very practical. I have not attempted to illustrate or describe other embodiments or adaptations as it is believed this disclosure will enable those skilled in the art to embody or adapt my improvements as may be desired.

Having thus described my invention, what I claim as new and desire to secure by Letters Patent, is:

1. In a combination finder for a lock, a lock engaging frame comprising an upper lock engaging arm, a lower tumbler registering arm and a U-shaped plate connecting said arms, said upper arm being pivoted to said plate, means resiliently urging said arms apart, a gauge member slidable between said arms and comprising a U-shaped element having a key pitch scale thereon and a pair of plates joining the ends of said element, a spring urged pointer pivoted to said plates to coact with said scale, a tumbler feeler pivoted to said plates and having a tail portion engaging said pointer, said feeler extending into cooperative relation with the tumblers of said lock to gauge the pitch of the same and actuate said pointer, means to advance and retract said gauge member for gauging successive tumblers, comprising a screw fixed to said member and internally threaded means journaled in said U-shaped plate for coaction with said screw, and means to indicate the extent of said advance or retraction, comprising a scale on said lower arm and a straight edge associated with said element cooperating with said scale.

2. In a combination finder for a lock, a lock engaging frame comprising an upper lock engaging arm, a lower tumbler registering arm and a U-shaped plate connecting said arms, said upper arm being pivoted to said plate, means resiliently urging said arms apart, a gauge member slidable between said arms and comprising an element having a key pitch scale thereon and a spring urged pointer pivoted to said member to coact with said scale, a tumbler feeler pivoted to said member and engaging said pointer, said feeler extending into cooperative relation with the tumblers of said lock to gauge the pitch of the same and actuate said pointer, means to advance and retract said gauge member for gauging successive tumblers, comprising a screw fixed to said member and internally threaded means journaled in said plate for coaction with said screw, and means to indicate the extent of said advance or retraction, comprising a scale on said lower arm and a straight edge associated with said element cooperating with said scale.

3. In a combination finder for a lock, a lock engaging frame comprising an upper lock engaging arm, a lower tumbler registering arm and a U-shaped plate connecting said arms, said upper arm being pivoted to said plate, a gauge member slidable between said arms and comprising an element having a key pitch scale thereon and a spring urged pointer pivoted to said member to coact with said scale, a tumbler feeler carried by said member and engaging said pointer, said feeler extending into cooperative relation with the tumblers of said lock to gauge the pitch of the same and actuate said pointer, means to advance and retract said gauge member for gauging successive tumblers, comprising a screw fixed to said member and internally threaded means journaled in said plate for coaction with said screw, and means to indicate the extent of said advance or retraction, comprising a scale on said lower arm and a straight edge associated with said element cooperating with said scale.

4. In a combination finder for a lock, a lock engaging frame comprising an upper lock engaging arm, a lower tumbler engaging arm, and means connecting said arms, one of said arms being pivoted to said means, a gauge member slidable in said frame and comprising an element having a key pitch scale thereon and a spring urged pointer pivoted to said member to coact with said scale, a tumbler feeler carried by said member and engaging said pointer, said feeler extending into cooperative relation with the tumblers of said lock to gauge the pitch of the same and actuate said pointer, means to advance and retract said gauge member for gauging successive tumblers, comprising a screw fixed to said member and internally threaded means journaled in said frame for coaction with said screw, and means to indicate the extent of said advance or retraction, comprising a scale on said frame and a straight edge associated with said element cooperating with said scale.

5. In a combination finder for a lock, a lock engaging frame comprising relatively movable lock engaging arms, a gauge member slidable in said frame and comprising an element having a key pitch scale thereon and a pointer pivoted to said member to coact with said scale, a tumbler feeler carried by said member and engaging said pointer, said feeler extending into cooperative relation with the tumblers of said lock to gauge the pitch of the same and actuate said pointer, means to advance and retract said gauge member for gauging successive tumblers, comprising a screw fixed to said member and internally threaded means journaled in said frame for coaction with said screw, and means on said frame to indicate the extent of said advance or retraction.

6. In a combination finder for a lock, a lock engaging frame comprising relatively movable

upper and lower lock engaging arms and means resiliently urging said arms apart, a gauge member slidable in said frame and comprising an element having a key pitch scale thereon and a pointer pivoted to said member to coact with said scale, a tumbler feeler carried by said member and engaging said pointer, said feeler extending into cooperative relation with the tumblers of said lock to gauge the pitch of the same and actuate said pointer, means to advance and retract said gauge member for gauging successive tumblers, and means on said frame to indicate the extent of said advance or retraction.

7. In a combination finder for a lock, a lock engaging frame comprising relatively movable upper and lower lock engaging arms and means resiliently urging said arms apart, a gauge member slidable in said frame and comprising an element having a key pitch scale thereon and a pointer pivoted to said member to coact with said scale, a tumbler feeler carried by said member and engaging said pointer, and means to advance and retract said gauge member for gauging successive tumblers.

8. In a combination finder for a lock, a lock engaging frame comprising relatively movable lock engaging arms and means resiliently urging said arms apart, a gauge member in said frame comprising an element having a key pitch scale thereon and a pointer pivoted to said member to coact with said scale, a tumbler feeler carried by said member and engaging said pointer, and means to advance and retract said gauge member for gauging successive tumblers.

9. In a combination finder, a frame member carrying a key pitch indicating scale, means on said member for registering the tumblers of a lock, an indicating pointer pivoted with respect to said member, a feeler having a tumbler contacting nose, said feeler being carried by said member and actuating said pointer whereby the pitch of the tumbler engaging portion of a key may be read from said scale, and means resiliently opposing actuation of said pointer by said feeler, whereby said feeler is resiliently thrust against successive tumblers upon movement of the feeler past the tumblers.

10. In a combination finder, a member carrying a key pitch indicating scale, means on said member for registering the tumblers of a lock, an indicating pointer pivoted with respect to said member, a feeler having a tumbler contacting nose, means for actuating said feeler past the tumblers, and means for resiliently thrusting the feeler against successive tumblers, said feeler being carried by said member and actuating said pointer whereby the pitch of the tumbler engaging portion of a key may be read from said scale.

11. In a combination finder, a member carrying a key pitch indicating scale, means on said member for registering the tumblers of a lock, an indicating pointer pivoted with respect to said member, a feeler having a tumbler contacting nose, means for actuating said feeler past the tumblers, and means for resiliently thrusting the feeler against successive tumblers, said feeler being carried by said member and engaging and actuating said pointer whereby the pitch of the tumbler engaging portion of a key may be read from said scale.

12. In a combination finder, a member carrying a key pitch indicating scale, an indicating pointer pivoted with respect to said member, a feeler having a tumbler contacting nose, means for actuating said feeler past the tumblers, and means for resiliently thrusting the feeler against successive tumblers, said feeler being carried by said member and engaging and actuating said pointer whereby the pitch of the tumbler engaging portion of a key may be read from said scale.

13. In a key combination finder, a frame member adapted to be engaged with a lock, a gauging element slidable in said frame member, screw means for adjusting said element in said frame member, said frame member having indicia thereon and said gauging element having means coacting with said indicia to visually indicate the degree of adjustment, a calibrated scale on said gauging element, a pointer pivoted on said gauging element and coacting with said scale to indicate key pitch dimensions, a tumbler feeler carried by said member for actuating said pointer, and means for resiliently thrusting said feeler against successive tumblers on movement of the feeler past the tumblers.

14. In a key combination finder, the combination of a frame comprising a pair of spaced side members connected at their outer ends so that their inner ends may be sprung relative to one another to engage a lock, one of the members having a stepped lock engaging finger and the other a hook-like lock engaging finger, a slide on said frame having a longitudinal opening therein, a pointer pivotally mounted on said slide to swing in said opening, said slide being provided with indicia operatively associated with said pointer, a feeler pivotally mounted on said slide and operatively connected with said pointer, and screw-threaded adjusting means for said slide, said frame having indicia operatively associated with said slide.

15. In a key combination finder, the combination of a frame provided with a pair of lock engaging members mounted thereon for relative pivotal movement, a slide on said frame, a pointer pivotally mounted on said slide, said slide being provided with indicia operatively associated with said pointer, a feeler pivotally mounted on said slide and operatively connected with said pointer, and screw-threaded adjusting means for said slide, said frame having indicia operatively associated with said slide.

16. In a key combination finder, the combination of a frame provided with a pair of lock engaging members including a tumbler holding finger, said members being mounted for relative pivotal movement, a slide mounted on said frame for manual adjustment, a pointer mounted on said slide, said slide being provided with indicia operatively associated with said pointer, and a feeler mounted on said slide and operatively connected to said pointer, said feeler being adapted to be brought into successive engagement with the tumblers of a lock in opposed relation to said finger by the adjustment of said slide, the frame being provided with slide adjustment indicating indicia.

LAWRENCE C. RIAL.