N. B. COOPER.
Hay-Rack.

No. 199,186. Patented Jan. 15, 1878.

Fig. 1.

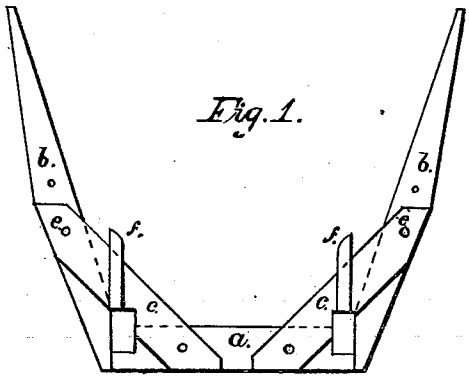

Fig. 2.

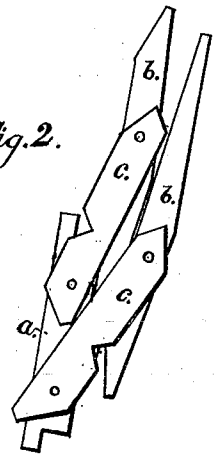

Fig. 3.

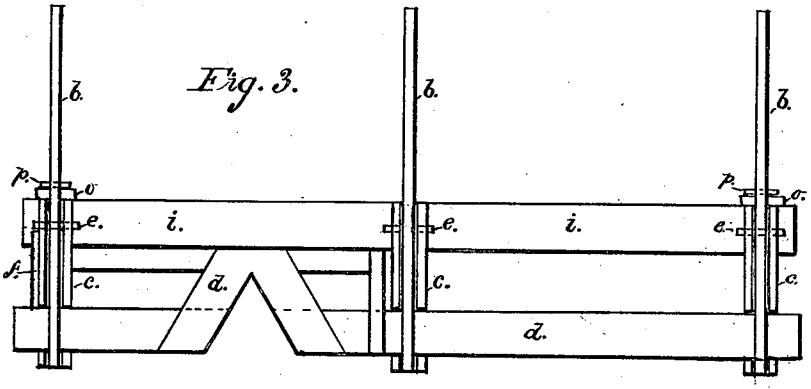

Fig. 4.

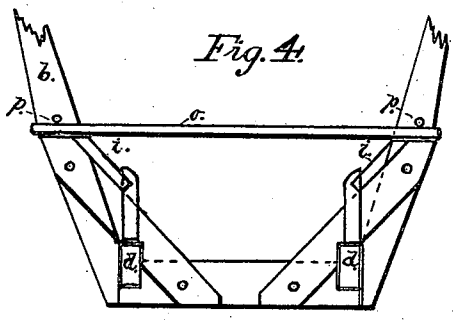

Witnesses:
Adam Bauer
S. T. Berity Jr.

Inventor:
Nelson B. Cooper,
By H. P. Wood
Atty.

N. PETERS, PHOTO-LITHOGRAPHER, WASHINGTON, D. C.

UNITED STATES PATENT OFFICE.

NELSON B. COOPER, OF DUNREITH, INDIANA.

IMPROVEMENT IN HAY-RACKS.

Specification forming part of Letters Patent No. **199,186**, dated January 15, 1878; application filed November 17, 1877.

To all whom it may concern:

Be it known that I, NELSON B. COOPER, of Dunreith, State of Indiana, have invented an Improvement in Hay-Racks, of which the following is a specification:

This invention relates to improvements in the class of hay-racks adapted to be easily applied and removed from a wagon, and folded compactly when not in use; and the invention consists in the general construction and combination of parts, as will be hereinafter fully described.

In the accompanying drawings, which illustrate my invention, Figure 1 represents an elevation, showing a jointed frame, forming one of the cross-beams and one pair of side stakes and braces of my hay-rack. Fig. 2 shows the same folded up for storing away. Fig. 3 represents a side elevation, showing the trussed side sill and jointed frames in position. Fig. 4 represents an end elevation.

The jointed frame, Fig. 1, consists of a cross-sill, *a*, side stakes *b b*, and braces *c c*. The ends of the cross-sill *a* and the under edges of the braces *c c* are notched, to embrace the side sills *d d*, as shown, Fig. 4. The braces *c c* are made of two similar pieces of plank, between which the cross-sill *a* and side stakes *b b* are placed, and secured by means of pins *e e*, on which the several pieces are free to turn.

The side stakes are so placed that when the frame is opened out their lower ends rest against the ends of the cross-sill, one edge forming, with the notches in the end of the cross-sill and side of braces *c*, a complete clamp, by which the frame is secured to the side sills.

Lugs *f f* are placed on the braces *c c* to receive the tie-boards *i i*, which will hereinafter be more fully described.

The trussed side sills *d* are constructed of pieces framed together, as shown, forming a bent sill, the object of which is to allow the front wheels of the wagon to pass under in the act of turning a corner. By this construction the rack may be hung lower than usual, thus avoiding danger of overturning when heavily loaded.

To construct the hay-rack, two, three, or more of the jointed frames, Fig. 1, having been constructed, they are arranged upon the trussed sills in the manner shown, Fig. 3, one being placed at each end, and the others at suitable distances between. Tie-boards *i i*, Figs. 3, 4, are then placed on the inside, near the top of the braces *c*, the said boards extending the whole length of the rack, and having notches in their edges, the notches being so arranged that those in the lower edge embrace the lugs *f* before mentioned, and those in the upper edge embrace the inside edge of the side stakes, thus holding the several frames at the required distance apart.

Cross-pieces *o*, Fig. 4, having a deep longitudinal notch at each end, are now placed between each pair of side stakes, fitting snugly and resting upon the tie-boards *i*, and held in place by the pins *p p*, thus forming altogether a strong rack, which may be readily taken apart on removing the pins *p*. The frames forming cross-sill and side stakes, on being removed from the side sills, may then be folded up in the manner shown in Fig. 2, and the whole packed away in a compact mass.

I am aware that hay-racks consisting of similar folding sections have been before made, but secured longitudinally in a different manner, and I do not claim, broadly, the said sections; but

I claim as my invention—

The combination of the jointed frames, consisting of the notched cross-sills *a*, side stakes *b*, and pivoted and notched braces *c*, provided with the lugs *f f*, with the trussed frames *d*, notched tie-boards *i*, notched cross-pieces *o*, and the pins *p*, the several parts constructed and relatively arranged substantially as and for the purpose herein shown and described.

NELSON B. COOPER.

Witnesses:

ROBERT D. CRAIGHEAD,

E. B. BOWMAN.