Office de la Propriété Intellectuelle du Canada
Un organisme d'Industrie Canada

Canadian Intellectual Property Office
An agency of Industry Canada

CA 2573846 A1 2007/07/12

(21) 2 573 846

(12) DEMANDE DE BREVET CANADIEN
CANADIAN PATENT APPLICATION

(13) A1

(22) Date de dépôt/Filing Date: 2007/01/12

(41) Mise à la disp. pub./Open to Public Insp.: 2007/07/12

(30) Priorité/Priority: 2006/01/12 (CA2,532,695)

(51) Cl.Int./Int.Cl. *A47F 7/04* (2006.01),
B65D 85/06 (2006.01)

(71) Demandeur/Applicant:
INDUSTRIES MARTINS, CA

(72) Inventeurs/Inventors:
DEPELTEAU, MARTIN, CA;
BOULAIS, JEAN-MICHEL, CA;
LEMIEUX, JEAN-PHILLIPPE, CA;
LORD, PHILIPPE, CA

(74) Agent: BCF LLP

(54) Titre : STRUCTURE D'ENTREPOSAGE
(54) Title: STORAGE STRUCTURE

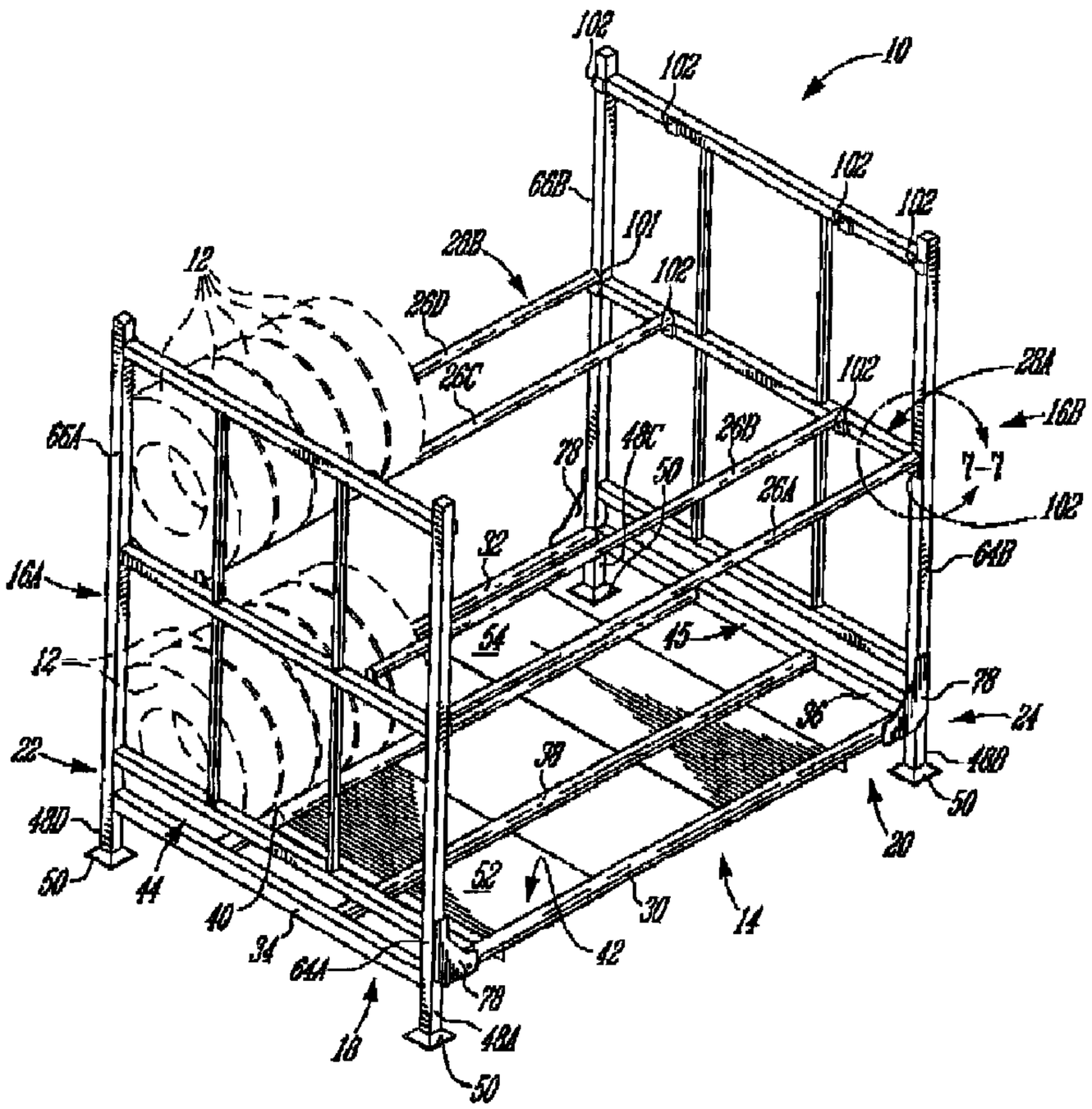

(57) Abrégé/Abstract:
An storage structure for articles such as tires and wheels and other articles comprising a base frame for supporting articles, a pair of lateral frames moveably mounted to the base frame, and longitudinal support members removably mountable to the pair of lateral frames for providing shelf-supports. When the longitudinal support members are removed from the lateral frames, the lateral frames are moveable between a substantially upstanding position and a foldable about their respective one end. A storage system comprising a plurality of stackable article/tire/wheel storage structures.

ABSTRACT OF THE DISCLOSURE

An storage structure for articles such as tires and wheels and other articles comprising a base frame for supporting articles, a pair of lateral frames moveably mounted to the base frame, and longitudinal support members removably mountable to the pair of lateral frames for providing shelf-supports. When the longitudinal support members are removed from the lateral frames, the lateral frames are moveable between a substantially upstanding position and a foldable about their respective one end. A storage system comprising a plurality of stackable article/tire/wheel storage structures.

TITLE OF THE INVENTION

[0001] STORAGE STRUCTURE

FIELD OF THE INVENTION

[0002] The present invention relates to a rack structure and storage system. More particularly but not exclusively, the present invention relates to a rack structure for storing tires, wheels and other articles.

BACKGROUND OF THE INVENTION

[0003] Racks for storing articles of manufacture and the like are well known. These racks usually include a base member with vertical standards defining a storage space. Furthermore, tire storage structures such as racks, cages and the like are also well known and generally have a height that is sufficient for storing two layers or rows of automobile tires or a single layer or row of larger-size tractor or truck tires.

[0004] The known art teaches a variety of storage racks, for example, United States Patent No. 3,557,966 issued to Skubic on January 26, 1971 teaches a pyramid-type rack for tire storage having removable vertical posts which have a shorter height than the base so as to more compactly store tires. The rack also includes a removable shelf. United States Patent No. 3,565,018 issued to Jay on February 23, 1971 teaches a modular rack for storing and shipping articles of manufacture. The rack includes upright frames that can be folded. United States Patent No. 3,850,295 issued to Black on November 26, 1974 teaches a tire shipping and storage structure for maintaining one or more stacks of tires in a

compressed condition during shipping. The structure includes a base vertical standards mounted to the base and a top member for engaging the tires. The vertical standards are adjustable along their height. United States Patent No. 6,298,999 issued to Bellman on October 9, 2001 teaches a storage rack for tires including a pallet and frame assembly removably mounted to the pallet.

OBJECT OF THE INVENTION

[0005] An object of the present invention is to provide a tire storage structure.

SUMMARY OF THE INVENTION

In accordance with an aspect of the present invention, there is provided a tire/wheel storage structure comprising:

a base frame for supporting tires/wheels;

a pair of lateral frames moveably mounted at one respective end thereof to said base frame; and

longitudinal support members removably mountable at each longitudinal end thereof to the pair of lateral frames for providing at least one shelf-support for supporting tires/wheels;

wherein when the longitudinal support members are removed from said lateral frames, the lateral frames are moveable between a substantially upstanding position and a foldable about their respective one end.

In accordance with another aspect of the present invention there is provided a tire/wheel storage system comprising a plurality of

stackable tire/wheel storage structures, each said tire/wheel storage structure comprising:

a base frame for supporting tires/wheels and comprising spacing members for providing a clearance thereunder, the spacing members defining opposite top and bottom end portions;

a pair of lateral frames moveably mounted at one respective end thereof to the base frame so as to be moveable between a substantially upstanding position and a folded position about their respective one end; and

longitudinal support members removably mountable at each longitudinal end thereof to the pair of lateral frames for providing at least one shelf-support for supporting tires/wheels;

wherein when stacking said tire/wheel support structures in the substantially upstanding position, the spacing member bottom end portions of a given top said tire/wheel storage structure sit on the lateral frames of an adjacent bottom tire/wheel structure and when stacking the tire/wheel support structures in the folded position, the spacing member bottom end portions of a given top tire/wheel storage structure sit on a respective top free end of a respective spacing member top end portion of a bottom tire/wheel support structure.

In accordance with a further aspect of the present invention there is provided an article storage structure comprising:

a base frame for supporting articles;

a pair of lateral frames moveably mounted at one respective end thereof to the base frame; and

longitudinal support members removably mountable at each longitudinal end thereof to the pair of lateral frames for providing at least one shelf-support for supporting articles;

wherein when the longitudinal support members are removed from the lateral frames, the lateral frames are moveable between a substantially upstanding position and a foldable about their respective one end.

In accordance with yet another aspect of the present invention, there is provided an article storage system comprising a plurality of stackable article/wheel storage structures, each article/wheel storage structure comprising:

a base frame for supporting articles and comprising spacing members for providing a clearance thereunder, the spacing members defining opposite top and bottom end portions

a pair of lateral frames moveably mounted at one respective end thereof to the base frame so as to be moveable between a substantially upstanding position and a folded position about their respective one end; and

longitudinal support members removably mountable at each longitudinal end thereof to the pair of lateral frames for providing at least one shelf-support for supporting articles;

wherein when stacking the article support structures in the substantially upstanding position, the spacing member bottom end portions of a given top article/wheel storage structure sit on the lateral frames of an adjacent bottom article structure and when stacking the article support structures in the folded position the spacing member bottom end portions of a given top article/wheel storage structure sit on a

respective top free end of a respective spacing member top end portion of a bottom article support structure.

In an embodiment, the base frame comprises lateral side ends, each of the pair of lateral frames being mounted at a respective lateral side end. In an embodiment, the pair of lateral frames are pivotally mounted to the base frame. In an embodiment, either one of the pair of lateral frames is foldable above the other. In an embodiment, the base frame comprises lateral side ends, either one of the lateral frame is mounted closer to a respective lateral side end than the other lateral frame.

In an embodiment, each lateral frame comprises a pair of end post members, each end post member being moveably mounted to the base frame. In an embodiment, the base frame comprises lateral side ends, each pair of post members of a respective lateral frame being pivotally mounted to the base frame near respective lateral side ends thereof, one pair of post members of one lateral frame being pivotally mounted closer to a respective lateral side end than the other pair of post members of the other lateral frame. In an embodiment, the post members are mounted to the base frame via respective plate members, the respective plate member being pivotally mounted to the base frame. In an embodiment, each of the plate members comprises first and second apertures for receiving a fastener therethrough, the fastener being mounted to the base frame, the plate member being pivotal about the fastener.

In an embodiment, at least one of the first and second apertures of a given plate member mounted to a post member mounted to

a given lateral side end is positioned closer to the given lateral side end than the other of the first and second apertures thereby providing for either one of the lateral frames to be folded above the other lateral frame when in the folded position. In an embodiment, the plate members of one of the pair of post members of one lateral frame are pivotally mounted to the base member via the first aperture respectively and the plate members of the other pair of post members of the other lateral frame being pivotally mounted to the base member via the second aperture respectively. In an embodiment, the post members of a given pair are interconnected via at least one horizontal rail. In an embodiment, post members of a given pair are interconnected via at least two horizontal members, the horizontal rails being interconnected via at least one vertical bar.

In an embodiment, the longitudinal support members comprise mounting elements at each longitudinal end thereof for being mounted to lateral frames. In an embodiment, the longitudinal support member mounting elements comprise flange members. In an embodiment, the lateral frames comprise respective lateral frame mounting elements complementary to the longitudinal support member mounting elements. In an embodiment, the lateral frame mounting elements comprise pocket members. In an embodiment, each of the lateral frames comprise respective mounting elements for receiving the longitudinal support members, the lateral frame mounting elements of a given lateral frame being positioned on at least one of the post members and/or the at least one horizontal rail. In an embodiment, each of the lateral frames comprise respective mounting elements for receiving the longitudinal support members, the lateral frame mounting elements of a given lateral frame

being positioned on at least one of the post members and/or at least one horizontal rail and/or at least one vertical bar.

In an embodiment, a pair of adjacent longitudinal support members mounted to the lateral frames define the shelf support. In an embodiment, the pair of adjacent longitudinal support members are so spaced apart as to support a tire/wheel therebetween. In an embodiment, longitudinal support members are mountable to the lateral frames near top ends thereof so as to define a roof frame.

In an embodiment, the base frame comprises opposite front and rear elongate members interconnected by opposite lateral side elongate members. In an embodiment, the base frame further comprises at least one auxiliary elongate member removably mountable to the opposite lateral side elongate members. In an embodiment, the base frame further comprises at least one auxiliary elongate member mounted to the opposite lateral side elongate members. In an embodiment, an auxiliary elongate member mounted to the opposite lateral side elongate members defines along with either one of an adjacent front and rear elongate members a tire/wheel support for supporting tires/wheels therebetween. In an embodiment, two auxiliary elongate members are mounted to the opposite lateral side elongate members defining a tire/wheel support for supporting tires/wheels therebetween. In an embodiment, two auxiliary elongate members are mounted to the opposite lateral side elongate members defining an additional tire/wheel support for supporting tires/wheels therebetween.

In an embodiment, one of the lateral frames is biased towards the other of the lateral frames. In an embodiment, one of the lateral frames is biased towards the other of said lateral frames, the one frame member comprising a pair of interconnected end post members, each of the post members of the pair being mounted to the base frame via a plate member, the post members being mounted to the plate member with an incline defining the bias. In an embodiment, at least one the two lateral frames is mounted to the base frame with an incline towards the other of the two lateral frames.

In an embodiment, the base frame further comprises spacing members for providing a clearance thereunder. In an embodiment, the spacing members comprise leg members comprising feet members at their bottom free ends.

In an embodiment, when stacking a plurality of the tire/wheel storage structure in the unfolded position on top of one another, the feet members of a given top tire/wheel storage structure sit on the lateral frames of an adjacent bottom tire/wheel structure. In an embodiment, each lateral frame comprises a pair of end post members, each post member defining a top end portion, wherein when the feet members of a given top tire/wheel storage structure sit on the lateral frames of an adjacent bottom tire/wheel structure each of the feet members sits on a respective said top end portion.

In an embodiment, when the lateral frames are in a folded position the leg members expose respective free top end portions. In an embodiment, when stacking a plurality of the tire/wheel storage structures

in the folded position on top of one another, the feet members of a given top tire/wheel storage structure sit on a respective top free end of a respective said leg member.

In an embodiment, the base frame further comprises support-elements on the underside thereof, the support-elements providing for receiving a forklift during lifting and descending operations.

In an embodiment, the longitudinal support members comprise a protective layer. In an embodiment, the protective later comprises an elastomeric material.

[0006] It should be noted that the terms "front" and "rear" are merely used for indicative purposes only and as such are interchangeable.

[0007] Other objects, advantages and features of the present invention will become more apparent upon reading of the following non-restrictive description of illustrative embodiments thereof, given by way of example only with reference to the accompanying drawings.

BRIEF DESCRIPTION OF THE FIGURES

[0008] In the appended drawings, where like reference numerals indicate like elements throughout and where:

[0009] Figure 1 is a perspective view of a storage structure of the invention in accordance with an embodiment thereof;

[0010] Figure 2 is a front elevational view of the tire/wheel storage structure of Figure 1 including shelf-structures with tires;

[0011] Figure 3 is a side elevational view of two stacked storage structures of Figure 1;

[0012] Figure 4A is a side elevational view of a storage structure of the invention in accordance with another embodiment thereof holding differently sized tires;

[0013] Figure 4B is a side elevational view of the storage structure of 4A holding tires in another position;

[0014] Figure 4C is a front elevational view of the storage structure of Figures 4A and 4B;

[0015] Figure 5 is a front elevation view of a plate member of the invention in accordance with an embodiment thereof;

[0016] Figure 6 is a front elevational view of three stacked storage structures of Figure 1 in a folded position;

[0017] Figure 7 is partial view of portion 7-7 of Figure 1;

[0018] Figure 8 is a front elevational view of the storage structure of the invention similar to Figure 2 with the shelf-structures removed and supporting tires within the space defined thereby; and

[0019] Figure 9 is a front elevational view of a storage structure of the invention in accordance with a further embodiment thereof.

[0020] Figure 10 is a side elevational view of a storage structure in accordance with yet another embodiment of the invention.

DESCRIPTION OF ILLUSTRATIVE EMBODIMENTS

[0021] The present invention is illustrated in further details by the following non-limiting examples.

[0022] Figure 1 shows a tire/wheel storage structure 10 having the general form of a rack for supporting tires or wheel 12, in accordance with an embodiment of the invention. In this case the structure 10 is shown supporting tires.

[0023] The tire/wheel storage structure 10 includes a base frame 14 and side frames 16A and 16B mounted near each lateral end 18 and 20 of the base member 14. More particularly, the side frames 16A and 16B are moveably mounted to the base frame 14 at their respective ends 22 and 24 and are generally upstanding therefrom. In the embodiment illustrated herein, the side frames 16A and 16B are pivotally mounted to the base frame 14.

[0024] The tire/wheel storage structure 10 further includes longitudinal support members such as 26A, 26B, 26C and 26D, which are removably mountable to side frames 16A and 16B for defining shelf supports 28A and 28B. More particularly, adjacent support members 26A and 26B are so spaced apart as to define a shelf support 28A for

supporting tires 12 therebetween as shown in Figures 1, 2 and 3; adjacent support members 26C and 26D are so spaced apart as to define a shelf support 28B for supporting tires 12 therebetween as shown in Figures 1 and 3. The skilled artisan will readily appreciate that a greater number of longitudinal support members, such as 26A, 26B, 26C and 26D can be provided so as to define a greater number of shelf supports for supporting an equal number of rows of tires 12. Furthermore, the distances between adjacent longitudinal support members of a given shelf-support can be varied to accommodate a plurality of tire sizes.

[0025] In another embodiment, shown in Figures 2, 8, 9 and 10 the longitudinal support members 26 are mountable to the side frames 16A and 16B so as to define a roof frame 29.

[0026] Hence, tire/wheel storage structure 10 can be modified into various suitable configurations.

[0027] Turning back to Figure 1, the base frame 14 comprises a generally rectangular configuration and includes front and rear elongate members 30 and 32 and lateral elongate members 34 and 36 which define the abovementioned lateral ends 18 and 20. The base frame 14 also includes auxiliary elongate members 38 and 40 which, like members 30 and 32, are mounted at their longitudinal ends to lateral elongate members 34 and 36. As shown in Figures 1, 2 and 3 auxillary elongate member 38 along with adjacent front elongate member 30 act as a tire support 42 for tires 12 as shown in Figures 1, 2 and 3; similarly, auxiliary elongate member 40 along with adjacent rear elongate member 32 act as a tire support 44 as shown in Figures 1 and 3. Moreover, the adjacent auxiliary elongate members 38 and 40 are so spaced as to define a shelf support

45 for supporting tires 12 thereon. It should be noted, in this illustrated example, when placing a full row tires 12 on shelf support 45, the tires 12 will take up too much space for either shelf supports 42 or 44 to be useable.

[0028] In another non-illustrated example, three shelf supports can be used to support three rows of wheels. In such a case, the support members 26A, 26B, 26C, and 26D can be covered with a resilient protective material such as rubber so as not to be damaged by metal wheels. In other cases, smaller tires can be used and as such the protective material need not be used.

[0029] With reference to Figure 4A, there is shown a tire support structure 11 having a base frame 14 including adjacent auxiliary elongate members 39A and 41B so spaced apart as to define a shelf support 46 for supporting a plurality of tires 12 and 13 having different sizes. As illustrated, the shelf support 46 is so positioned as to provide for a tire 13, such as a truck or tractor tire, having a larger width W2 than the width W1 of a standard car tire 12. As shown, the width W2 of tire 13 spans the width of the base frame 14. Furthermore, when a tire support structure 10 or 11, supports larger tires 13, longitudinal support members such as 26A, 26B, 26C and 26D are removed so as to accommodate the height H2 of tire 13 as well as the height H1 of tire 12. In this way, the various tire support structures of the present invention provide for receiving a plurality of differently shaped tires 12 or 13 and the like.

[0030] Figure 4B, shows a lateral side of the support structure 11, with tires 12 and 13 piled flat on top of one another, on a shelf 47 defined by adjacent auxiliary elongate members 37 and 43 mounted to the

frame 14. Figure 4C shows that structure 11 supporting two vertical rows of like-sized tires 12, with support members 28 mounted to the lateral frames 16A and 16Bon the rear side of the structure so as to act as a security support for the tires 12 during transport of the structure 11 for example.

[0031] Turning back to Figure 1, the generally rectangular base frame 14 includes short leg members 48A, 48B, 48C and 48D including respective feet 50 at each corner thereof respectively. Legs 48A, 48B, 48C and 48D define a clearance space beneath the base frame 14. The base frame 14 also includes panels 52 and 54 mounted on the underside of members 30, 32, 38 and 40. As better shown in Figures 2, 6, 8 and 9 panel 52 defines a pair of downward flanges 56 and 58 and panel 54 defined a pair of downward flanges 60 and 62. In another embodiment, the panels 52 and 54 only define flanges 56 and 62. The panels 52 and 54 add stability to the base frame 14. The aforementioned clearance provides for a forklift (not shown) to have access to the underside of the base frame 14 and for the raising forks (not shown) to abut the downward flanges 56, 58, 60 and 62 for secure support when lifting or descending a tire support structure 10.

[0032] With respect to Figure 1, lateral side frames 16A and 16B respectively comprise a pair of interconnected end posts 64A, 66A, and 64B, 66B respectively. With reference to Figure 3, each pair of interconnected posts 64A, 66A and 64B, 66B (only posts 64A and 66A are illustrated here) are interconnected via top, middle and bottom horizontal rails 68, 70 and 72 respectively. Horizontal rails 68, 70 and 72 are interconnected via vertical bars 74 and 76. In another embodiment, shown in Figure 4, a tire support structure 11 includes a lateral frame 16A

having two interconnected end posts 64A and 66A interconnected via top, middle and bottom horizontal rails 68, 70 and 72 respectively, which are in turn interconnected via a single vertical bar 78.

[0033] Each post 64A, 66A, 64B, and 66B includes a plate member 78 at its bottom end 80 (see Figure 3) which is moveably mounted to the base frame 14. Specifically, the respective plate members 78 of each post member 64A and 64B are mounted to the front elongate member 30 and the respective plate members 78 of each post member 66A and 66B are mounted to the rear elongate member 32. Each plate member 78 is pivotally mounted to the base frame as will be described herein.

[0034] With reference to Figure 5 the plate member 78 comprises a generally L-shaped flat body having a flat corner 82 between the vertical portion 86 and the horizontal portion 88. The horizontal portion 88 is directed towards the right when mounted to a left post member 64A and 66A (see Figure 1) or to the left when mounted to a right post member 64B or 66B (see Figure 1). The horizontal portion 88 includes two apertures 90 and 92 for being pivotally mounted to elongate members 30 or 32. As the skilled artisan will easily appreciate a fastener (not shown) is driven through an aperture 90 or 92 into an elongate member 30 or 32 through apertures 93, 94, 95 and 96 (see Figure 6); a given plate member 78 is pivotal about this fastener. The positioning of mounting apertures 93, 94, 95 and 96 are in the same order from left to right on elongate member 32 as elongate member 30. The vertical portion 88 of the plate member 78 is welded onto the bottom end portion 80 of post member 64A, 64B, 66A or 66B; of course other ways of mounting the plate member 78 to a post member can be contemplated within the scope of the present

invention. Plate members 78 provide for folding the left and right lateral frames 16A and 16B from a generally upright position shown for example in Figure 1 to a folded position as shown in Figure 6.

[0035] Referring again to Figure 6, and with respect to lateral frame 16A, the plate member 78 of post members 64A is mounted to elongate member 30 via plate-member aperture 94 and elongate-member aperture 92; the plate member 78 of post member 66A is mounted to elongate member 32 via plate-member aperture 90 and elongate-member aperture 95. With respect to lateral frame 16B, the plate member 78 of post member 64B is mounted to front elongate member 30 via plate-member aperture 90 and elongate member aperture 96; the plate member 78 of post members 66B is mounted to rear elongate member 32 via plate-member aperture 90 and elongate-member aperture 93. In this way, lateral frame 16A is folded above lateral frame 16B. In another embodiment, the lateral frame 16B may be mounted closer to the lateral end 18 of base frame 14 than the distance separating lateral frame 16A and the opposite lateral end 20, such that frame 16B is foldable over frame 16A. The double apertures 90 and 92 of the plate members 78 provide for the foregoing.

[0036] Turning to Figure 3, when a lateral frame 16A or 16B is placed in the unfolded position, the bottom end 99 of the post members (only post members 64A and 66A are illustrated here) lies flush with the top end 100 of the short legs (only short legs 48A and 48D are illustrated here).

[0037] With reference to Figure 7, a given support member, such as 26A includes mounting elements 101 at each longitudinal end in

the form of flange configured to interlock with a complementary mounting element 102 on the lateral frames 16A and 16B. Mounting element 102 is in the form of a pocket-structure configured to removably and securely receive a flange 100. As shown, for example in Figure 1, mounting elements 102 are positioned on frame 16B near the middle at top portions of post members 64B and 66B, as well as on the top and middle rails 68 and 70 respectively. Of course, the skilled artisan will appreciate that mounting elements 102 can be positioned at various points on the lateral frames 16A or 16B so as to defined shelf structures 28A, 28B or roof structures 29. Furthermore, the mutually interlocking mounting elements 100 and 102 can be provided in a variety of suitable configurations as would be understood by a skilled artisan.

[0038] Its should be noted that the support members 26, 26A, 26B, 26C and 26D are removed from the tire support structures 10 or 11 so as to fold the lateral frames 16A and 16B as shown in Figure 6 and that the support members 26, 26A, 26B, 26C and 26D, when mounted to the lateral frames 16A and 16B stabilize the tire support structures 10 or 11 of the present invention.

[0039] In an embodiment, at least one of the lateral frames 16A or 16B has their post members 64A, 66A, 64B and 66B welded onto the plate member 78 at an inclination with respect to the vertical axis thereof such that the lateral frame 16A or 16B is inwardly inclined towards the base frame 14.

[0040] Referring now, to Figure 8, the shelf-supports may 28A and 28B are demountable creating a space 104 spanning from the base frame 14 to the roof frame 29 and from lateral frame 16A to lateral frame

16B.

[0041] With reference again to Figures 3 and 6, the tire support structures 10 of the invention are stackable in the unfolded and folded positions respectively. In both cases, a forklift engages the tire support structures 10 whether in the folded position or the unfolded position while supporting tires 12 as described above. As shown in Figure 3, when a plurality of unfolded tire support structures 10 are stacked such as tire support structures 10' and 10" on top of each other, the feet 50 of a top tire support structure such as 10", will sit on the top ends 106 of the posts 64A, 64B, 66A, and 66B of a bottom tire support structure such as 10'. As shown in Figure 6, when a plurality of folded tire support structures 10 are stacked such as tire support structures 10', 10" and 10"' on top of each other, the feet 50 of top tire support structure such as 10" or 10"", will sit on the top ends 100 of the short legs 48A, 48B, 48C and 48D of a bottom tire support structure such as 10' or 10" respectively. Feet 50 have a rectangular and conical configuration that provides for them to sit on top ends 100 and 106 with sufficient stability. Of course, the skilled artisan may contemplate other suitable configurations for feet 50 within the scope of the present invention.

[0042] Figure 9 shows a tire/wheel support structure 111 in accordance with an embodiment of the invention including lateral frames 116A and 116B, moveably connected to a base frame 114 via plate members 178 as well as longitudinal support members 126 for defining a roof frame as well as shelf supports 128, 130, and 132

[0043] Figure 10 shown a further tire/wheel storage structure 210 in accordance with an embodiment of the invention including lateral

frames 216A (only one frame shown here) moveably connected to a base frame 214. The base frame as 214 as well as the lateral frames include longitudinal support members 226 mounted thereto. A pair of adjacent members 226 define shelf-supports at three 230, 232 and 234 which respectively include three shelf supports each namely: 230A, 230B, 230C; 232A, 232B, 232C; and 234A, 234B, 234C. Members 226 are covered with an elastomeric or other type of suitable protective material when supporting metallic wheels.

[0044] The skilled artisan will easily understand that all the elements of the various tire/wheel storage structures 10, 11 and 111 described herein can be combined in a variety of ways to provide for other non-illustrated embodiments which are within the scope of the invention. Of course, the storage structures of the present invention can be used to store not only tires and wheels but a variety of articles. Furthermore, the skilled artisan will also easily understand that the storage structures of the present invention can be used for supporting a variety of articles other than tires or wheels

[0045] It is to be understood that the invention is not limited in its application to the details of construction and parts illustrated in the accompanying drawings and described hereinabove. The invention is capable of other embodiments and of being practiced in various ways. It is also to be understood that the phraseology or terminology used herein is for the purpose of description and not limitation. Hence, although the present invention has been described hereinabove by way of embodiments thereof, it can be modified, without departing from the spirit, scope and nature of the subject invention as defined in the appended claims.

WHAT IS CLAIMED IS:

1. A tire/wheel storage structure comprising:

a base frame for supporting tires/wheels;

a pair of lateral frames moveably mounted at one respective end thereof to said base frame; and

longitudinal support members removably mountable at each longitudinal end thereof to said pair of lateral frames for providing at least one shelf-support for supporting tires/wheels;

wherein when said longitudinal support members are removed from said lateral frames, said lateral frames are moveable between a substantially upstanding position and a foldable about their respective said one end.

2. A tire/wheel storage structure according to claim 1, wherein said base frame comprises lateral side ends, each of said pair of lateral frames being mounted at a respective said lateral side end.

3. A tire/wheel storage structure according to any one of claims 1 or 2, wherein said pair of lateral frames are pivotally mounted to said base frame.

4. A tire/wheel storage structure according to any one of claims 1 to 3, wherein either one of said pair of lateral frames is foldable above the other.

5. A tire/wheel storage structure according to claim 4, wherein said base frame comprises lateral side ends, said either one

lateral frame is mounted closer to a respective said lateral side end that said other lateral frame.

6. A tire/wheel storage structure according to any one of claims 1 to 5, wherein each said lateral frame comprises a pair of end post members, each said end post member being moveably mounted to said base frame.

7. A tire/wheel storage structure according to claim 6, wherein said base frame comprises lateral side ends, each said pair of post members of a respective said lateral frame being pivotally mounted to said base frame near respective said lateral side ends thereof, one said pair said post members of one said lateral frame being pivotally mounted closer to a respective said lateral side end than the other said pair of post members of the other said lateral frame.

8. A tire/wheel storage structure according to any one of claims 6 or 7, wherein said post members are mounted to said base frame via respective plate members, said respective plate member being pivotally mounted to said base frame.

9. A tire/wheel storage structure according to claim 8, wherein each of said plate members comprise first and second apertures for receiving a fastener therethrough, said fastener being mounted to said base frame, said plate member being pivotal about said fastener.

10. A tire/wheel storage structure according to claim 9, wherein at least one said of said first and second apertures of a given said

plate member mounted to a said post member mounted to near a given said lateral side end is positioned closer to said given lateral side end than the other of said first and second apertures thereby providing for either one of said lateral frames to be folded above the other said lateral frame when in said folded position.

11. A tire/wheel storage structure according to any one of claims 9 to 10, wherein said plate members of one said pair of post members of one said lateral frame are pivotally mounted to said base member via said first apertures respectively and said plate members of the other said pair of post members of the other said lateral frame being pivotally mounted to said base member via said second aperture respectively.

12. A tire/wheel storage structure according to any one of claims 6 to 11, wherein of said post members of a given said pair are interconnected via at least one horizontal rail.

13. A tire/wheel storage structure according to claim 12, wherein said post members of said given pair are interconnected via at least two said horizontal members, said horizontal rails being interconnected via at least one vertical bar.

14. A tire/wheel storage structure according to any one of claims 1 to 13, wherein said longitudinal support members comprise mounting elements at each said longitudinal end thereof for being mounted to said lateral frames.

15. A tire/wheel storage structure according to claim 14, wherein said longitudinal support member mounting elements comprise flange members.

16. A tire/wheel storage structure according to any one of claims 14 to 15, wherein said lateral frames comprise respective lateral frame mounting elements complementary to said longitudinal support member mounting elements.

17. A tire/wheel storage structure according to claim 16, wherein said lateral frame mounting elements comprise pocket members.

18. A tire/wheel storage structure according to claim 12, wherein each said lateral frames comprise respective mounting elements for receiving said longitudinal support members, said lateral frame mounting elements of a given said lateral frame being positioned on at least one of said post members and/or said at least one horizontal rail.

19. A tire/wheel storage structure according to claim 13, wherein each said lateral frames comprise respective mounting elements for receiving said longitudinal support members, said lateral frame mounting elements of a given said lateral frame being positioned on at least one of said post members and/or said at least one horizontal rail and/or said at least one vertical bar.

20. A tire/wheel storage structure according to any one of claim 1 to 19, wherein a pair of adjacent longitudinal support members mounted to said lateral frames define said shelf support.

21. A tire/wheel storage structure according to claim 20, wherein said pair of adjacent longitudinal support members are so space apart as to support a tire/wheel therebetween.

22. A tire/wheel storage structure according to claim 1, wherein said longitudinal support members are mountable to said lateral frames near top ends thereof so as to define a roof frame.

23. A tire/wheel storage structure according to any one of claims 1 to 22, wherein said base frame comprises opposite front and rear elongate members interconnected by opposite lateral side elongate members.

24. A tire/wheel storage structure according to claim 23, wherein said base frame further comprises at least one said auxiliary elongate member removably mountable to said opposite lateral side elongate members.

25. A tire/wheel storage structure according to claim 23, wherein said base frame further comprises at least one auxiliary elongate member mounted to said opposite lateral side elongate members.

26. A tire/wheel storage structure according to any one of claims 24 to 25, wherein a said auxiliary elongate member mounted to said opposite lateral side elongate members defines along with either one of an adjacent said front and rear elongate members a tire/wheel support for supporting tires/wheels therebetween.

27. A tire/wheel storage structure according to any one of claims 24 to 25, wherein two said auxiliary elongate member mounted to said opposite lateral side elongate members define a tire/wheel support for supporting tires/wheels therebetween.

28. A tire/wheel storage structure according to claim 26, wherein two said auxiliary elongate member mounted to said opposite lateral side elongate members define an additional tire/wheel support for supporting tires/wheels therebetween.

29. A tire/wheel storage structure according to any one claims 1 to 28, wherein one of said lateral frames is biased towards the other of said lateral frames.

30. A tire/wheel storage structure according to claim 1, wherein one of said lateral frames is biased towards the other of said lateral frames, said one frame member comprising a pair of interconnected end post members, each of said post members of said pair being mounted to said base frame via a plate member, said post members being mounted to said plate member with an incline defining said bias.

31. A tire/wheel storage structure according to claims 1, wherein at least one said two lateral frames is mounted to said base frame with an incline towards the other of said two lateral frames.

32. A tire/wheel storage structure according to claim one of claims 1 to 31, wherein said base frame further comprises spacing members for providing a clearance thereunder.

33. A tire/wheel storage structure according to claim 32, wherein said spacing members comprise leg members comprising feet members at their bottom free ends.

34. A tire/wheel storage structure according to claim 33, wherein when stacking a plurality of said tire/wheel storage structure in said unfolded position on top of one another, said feet members of a given top said tire/wheel storage structure sit on said lateral frames of an adjacent bottom said tire/wheel structure.

35. A tire/wheel storage structure according to claim 34, wherein each said lateral frame comprises a pair of end post members, each said post member defining a top end portion, wherein when said feet members of a given top said tire/wheel storage structure sit on said lateral frames of an adjacent bottom said tire/wheel structure each said feet member sits on a respective said top end portion.

36. A tire/wheel storage structure according to claim 33, wherein when said lateral frames are in a folded position said leg members expose respective free top end portions.

37. A tire/wheel storage structure according to claim 36, wherein when stacking a plurality of said tire/wheel storage structures in said unfolded position on top of one another, said feet members of a given

top said tire/wheel storage structure sit on a respective said top free end of a respective said leg member.

38. A tire/wheel storage structure according to claim 32, wherein said base frame further comprises support-elements on the underside thereof, said support-elements providing for receiving a forklift during lifting and descending operations.

39. A tire/wheel storage structure according to any one of claims 1 to 38, wherein said longitudinal support members comprise a protective layer.

40. A tire/wheel storage structure according to claim 39, wherein said protective later comprises an elastomeric material.

41. A tire/wheel storage system comprising a plurality of stackable tire/wheel storage structures, each said tire/wheel storage structure comprising:

a base frame for supporting tires/wheels and comprising spacing members for providing a clearance thereunder, said spacing members defining opposite top and bottom end portions

a pair of lateral frames moveably mounted at one respective end thereof to said base frame so as to be moveable between a substantially upstanding position and a folded position about their respective said one end; and

longitudinal support members removably mountable at each longitudinal end thereof to said pair of lateral frames for providing at least one shelf-support for supporting tires/wheels;

wherein when stacking said tire/wheel support structures in said substantially upstanding position, said spacing member bottom end portions of a given top said tire/wheel storage structure sit on said lateral frames of an adjacent bottom said tire/wheel structure and when stacking said tire/wheel support structures in said folded position said spacing member bottom end portions of a given top said tire/wheel storage structure sit on a respective said top free end of a respective spacing member top end portion of a bottom said tire/wheel support structure.

42. An article storage structure comprising:

a base frame for supporting articles;

a pair of lateral frames moveably mounted at one respective end thereof to said base frame; and

longitudinal support members removably mountable at each longitudinal end thereof to said pair of lateral frames for providing at least one shelf-support for supporting articles;

wherein when said longitudinal support members are removed from said lateral frames, said lateral frames are moveable between a substantially upstanding position and a foldable about their respective said one end.

43. An article storage structure according to claim 42, wherein said base frame comprises lateral side ends, each of said pair of lateral frames being mounted at a respective said lateral side end.

44. An article storage structure according to any one of claims 42 or 43, wherein said pair of lateral frames are pivotally mounted to said base frame.

45. An article storage structure according to any one of claims 42 to 44, wherein either one of said pair of lateral frames is foldable above the other.

46. An article storage structure according to claim 45, wherein said base frame comprises lateral side ends, said either one lateral frame is mounted closer to a respective said lateral side end that said other lateral frame.

47. An article storage structure according to any one of claims 42 to 46, wherein each said lateral frame comprises a pair of end post members, each said end post member being moveably mounted to said base frame.

48. An article storage structure according to claim 47, wherein said base frame comprises lateral side ends, each said pair of post members of a respective said lateral frame being pivotally mounted to said base frame near respective said lateral side ends thereof, one said pair said post members of one said lateral frame being pivotally mounted closer to a respective said lateral side end than the other said pair of post members of the other said lateral frame.

49. An article storage structure according to any one of claims 47 or 48, wherein said post members are mounted to said base frame via respective plate members, said respective plate member being pivotally mounted to said base frame.

50. An article storage structure according to claim 49, wherein each of said plate members comprise first and second apertures for receiving a fastener therethrough, said fastener being mounted to said base frame, said plate member being pivotal about said fastener.

51. An article storage structure according to claim 50, wherein at least one said of said first and second apertures of a given said plate member mounted to a said post member mounted to near a given said lateral side end is positioned closer to said given lateral side end than the other of said first and second apertures thereby providing for either one of said lateral frames to be folded above the other said lateral frame when in said folded position.

52. An article storage structure according to any one of claims 50 to 51, wherein said plate members of one said pair of post members of one said lateral frame are pivotally mounted to said base member via said first apertures respectively and said plate members of the other said pair of post members of the other said lateral frame being pivotally mounted to said base member via said second aperture respectively.

53. An article storage structure according to any one of claims 47 to 52, wherein of said post members of a given said pair are interconnected via at least one horizontal rail.

54. An article storage structure according to claim 53, wherein said post members of said given pair are interconnected via at

least two said horizontal members, said horizontal rails being interconnected via at least one vertical bar.

55. An article storage structure according to any one of claims 42 to 44, wherein said longitudinal support members comprise mounting elements at each said longitudinal end thereof for being mounted to said lateral frames.

56. An article storage structure according to claim 55, wherein said longitudinal support member mounting elements comprise flange members.

57. An article storage structure according to any one of claims 55 to 56, wherein said lateral frames comprise respective lateral frame mounting elements complementary to said longitudinal support member mounting elements.

58. An article storage structure according to claim 57, wherein said lateral frame mounting elements comprise pocket members.

59. An article storage structure according to claim 53, wherein each said lateral frames comprise respective mounting elements for receiving said longitudinal support members, said lateral frame mounting elements of a given said lateral frame being positioned on at least one of said post members and/or said at least one horizontal rail.

50. An article storage structure according to claim 54, wherein each said lateral frames comprise respective mounting elements

for receiving said longitudinal support members, said lateral frame mounting elements of a given said lateral frame being positioned on at least one of said post members and/or said at least one horizontal rail and/or said at least one vertical bar.

61. An article storage structure according to any one of claim 42 to 60, wherein a pair of adjacent longitudinal support members mounted to said lateral frames define said shelf support.

62. An article storage structure according to claim 61, wherein said pair of adjacent longitudinal support members are so space apart as to support a article therebetween.

63. An article storage structure according to claim 42, wherein said longitudinal support members are mountable to said lateral frames near top ends thereof so as to define a roof frame.

64. An article storage structure according to any one of claims 42 to 63, wherein said base frame comprises opposite front and rear elongate members interconnected by opposite lateral side elongate members.

65. An article storage structure according to claim 64, wherein said base frame further comprises at least one said auxiliary elongate member removably mountable to said opposite lateral side elongate members.

66. An article storage structure according to claim 64, wherein said base frame further comprises at least one auxiliary elongate member mounted to said opposite lateral side elongate members.

67. An article storage structure according to any one of claims 65 to 66, wherein a said auxiliary elongate member mounted to said opposite lateral side elongate members defines along with either one of an adjacent said front and rear elongate members a article support for supporting articles therebetween.

68. An article storage structure according to any one of claims 65 to 66, wherein two said auxiliary elongate member mounted to said opposite lateral side elongate members define a article support for supporting articles therebetween.

69. An article storage structure according to claim 67, wherein two said auxiliary elongate member mounted to said opposite lateral side elongate members define an additional article support for supporting articles therebetween.

70. An article storage structure according to any one claims 42 to 69, wherein one of said lateral frames is biased towards the other of said lateral frames.

71. An article storage structure according to claim 42, wherein one of said lateral frames is biased towards the other of said lateral frames, said one frame member comprising a pair of interconnected end post members, each of said post members of said pair being mounted

to said base frame via a plate member, said post members being mounted to said plate member with an incline defining said bias.

72. An article storage structure according to claim 42, wherein at least one said two lateral frames is mounted to said base frame with an incline towards the other of said two lateral frames.

73. An article storage structure according to claim one of claims 42 to 72, wherein said base frame further comprises spacing members for providing a clearance thereunder.

74. An article storage structure according to claim 73, wherein said spacing members comprise leg members comprising feet members at their bottom free ends.

75. An article storage structure according to claim 74, wherein when stacking a plurality of said article/wheel storage structure in said unfolded position on top of one another, said feet members of a given top said article/wheel storage structure sit on said lateral frames of an adjacent bottom said article structure.

76. An article storage structure according to claim 75, wherein each said lateral frame comprises a pair of end post members, each said post member defining a top end portion, wherein when said feet members of a given top said article/wheel storage structure sit on said lateral frames of an adjacent bottom said article structure each said feet member sits on a respective said top end portion.

77. An article storage structure according to claim 74, wherein when said lateral frames are in a folded position said leg members expose respective free top end portions.

78. An article storage structure according to claim 77, wherein when stacking a plurality of said article/wheel storage structures in said unfolded position on top of one another, said feet members of a given top said article/wheel storage structure sit on a respective said top free end of a respective said leg member.

79. An article storage structure according to claim 73, wherein said base frame further comprises support-elements on the underside thereof, said support-elements providing for receiving a forklift during lifting and descending operations.

80. An article storage structure according to any one of claims 1 to 79, wherein said longitudinal support members comprise a protective layer.

81. An article storage structure according to claim 80, wherein said protective later comprises an elastomeric material.

82. An article storage system comprising a plurality of stackable article/wheel storage structures, each said article/wheel storage structure comprising:

a base frame for supporting articles and comprising spacing members for providing a clearance thereunder, said spacing members defining opposite top and bottom end portions

a pair of lateral frames moveably mounted at one respective end thereof to said base frame so as to be moveable between a substantially upstanding position and a folded position about their respective said one end; and

longitudinal support members removably mountable at each longitudinal end thereof to said pair of lateral frames for providing at least one shelf-support for supporting articles;

wherein when stacking said article support structures in said substantially upstanding position, said spacing member bottom end portions of a given top said article/wheel storage structure sit on said lateral frames of an adjacent bottom said article structure and when stacking said article support structures in said folded position said spacing member bottom end portions of a given top said article/wheel storage structure sit on a respective said top free end of a respective spacing member top end portion of a bottom said article support structure.

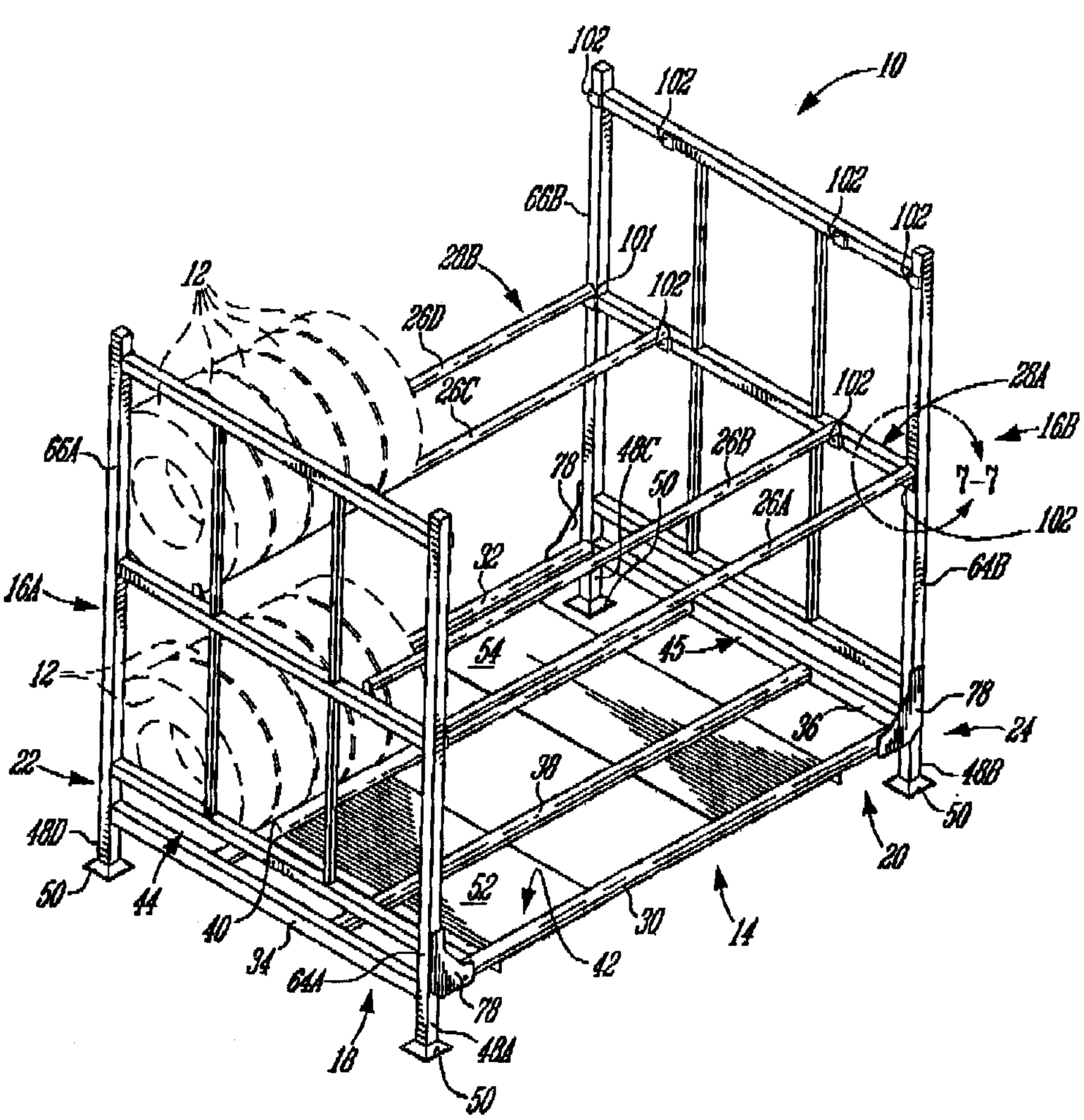
102
10
102
102
102
66B
101
28B
12
102
26D
26C
102
28A
16B
65A
78
48C
50
26B
7-7
26A
102
32
64B
16A
54
45
12
78
24
36
48B
50
22
38
20
48D
50
52
30
14
44
40
42
34
64A
78
18
48A
50

FIG. 1

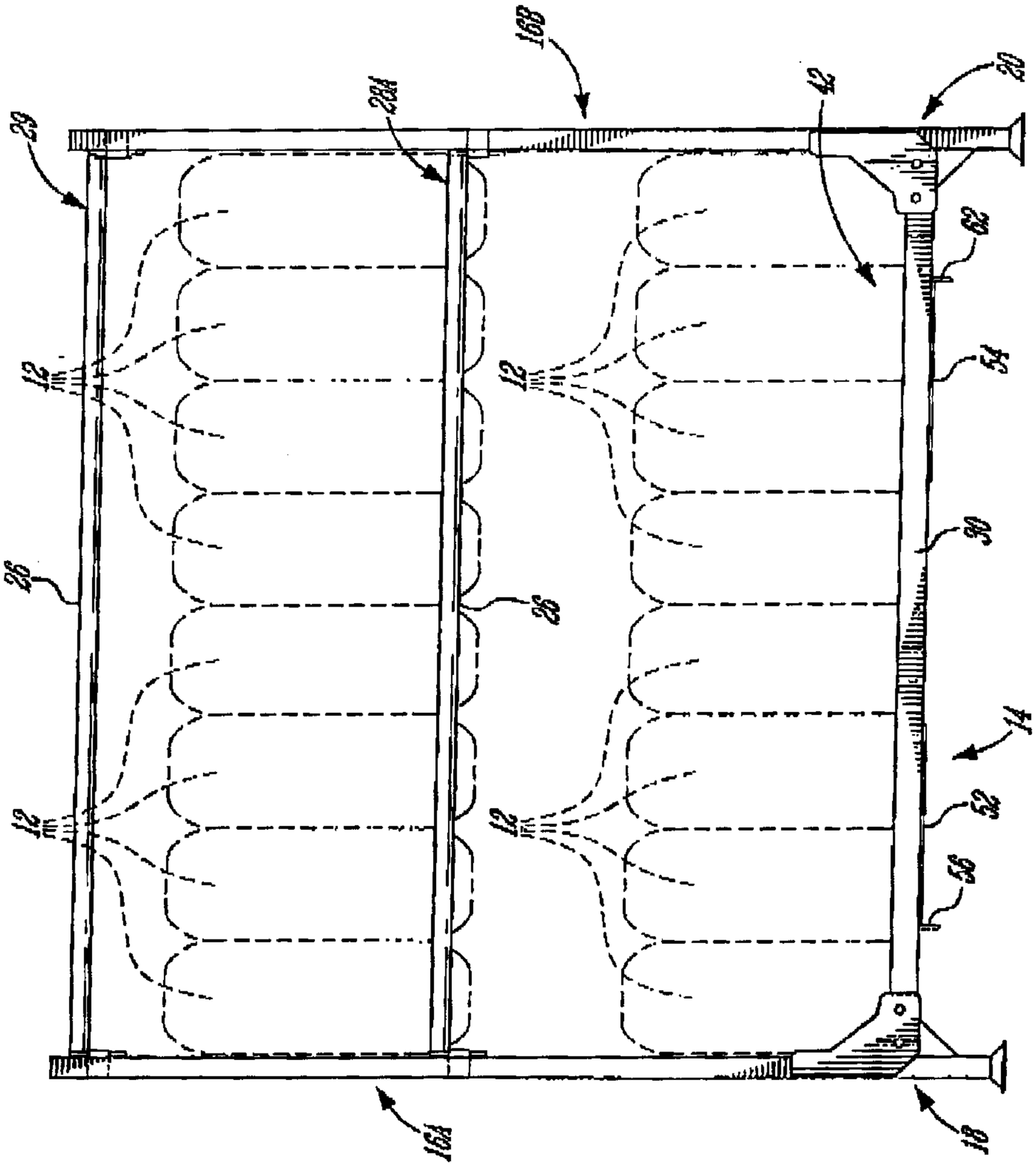

FIG-2

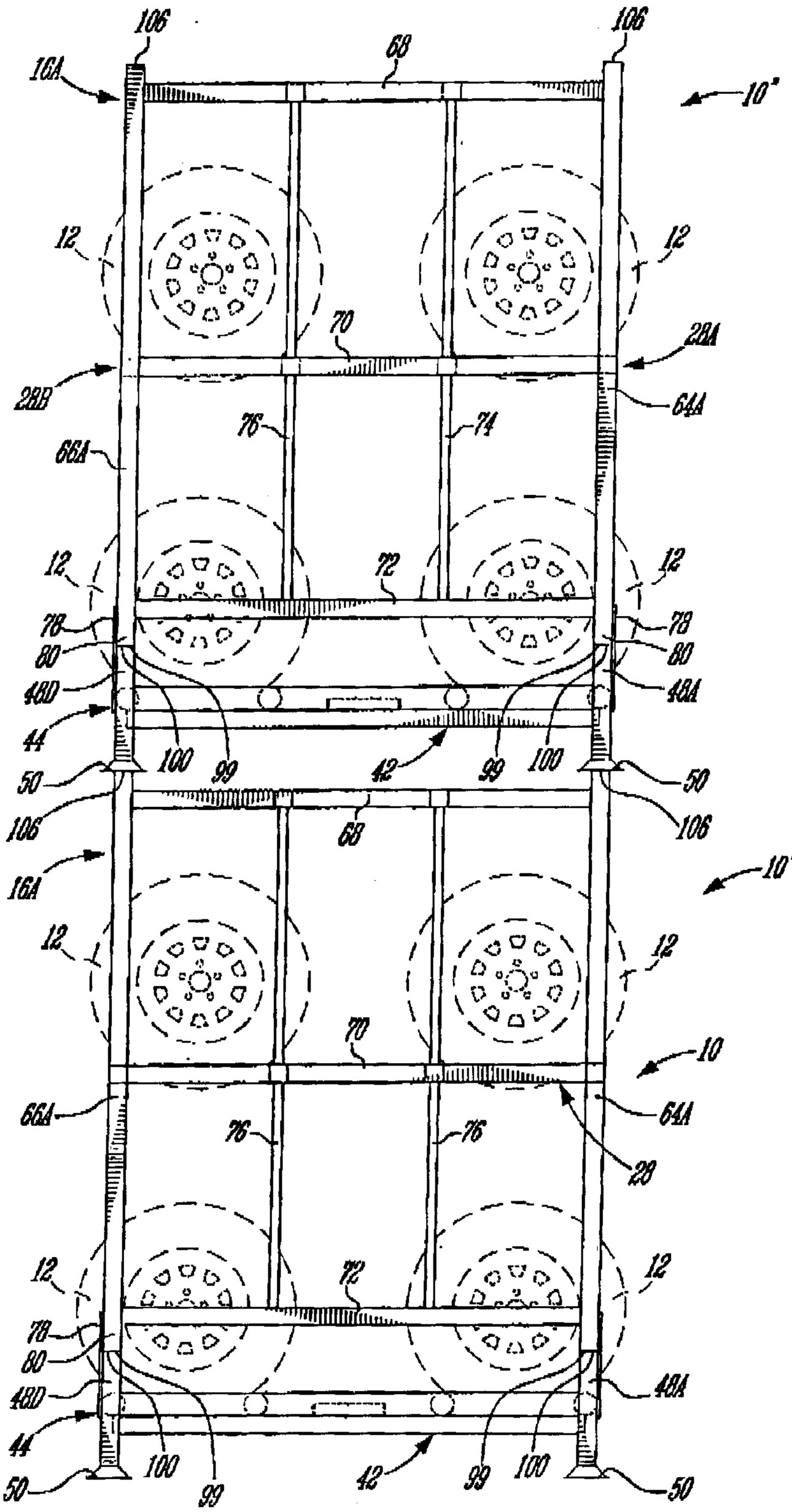
106
106
68
16A
10'
12
12
70
28A
28B
64A
76
74
66A
12
12
72
78
78
80
80
48D
48A
44
100
99
42
99
100
50
50
106
106
68
16A
10'
12
12
70
10
66A
64A
76
76
28
12
12
72
78
80
48D
48A
44
100
99
42
99
100
50
50

FIG. 3

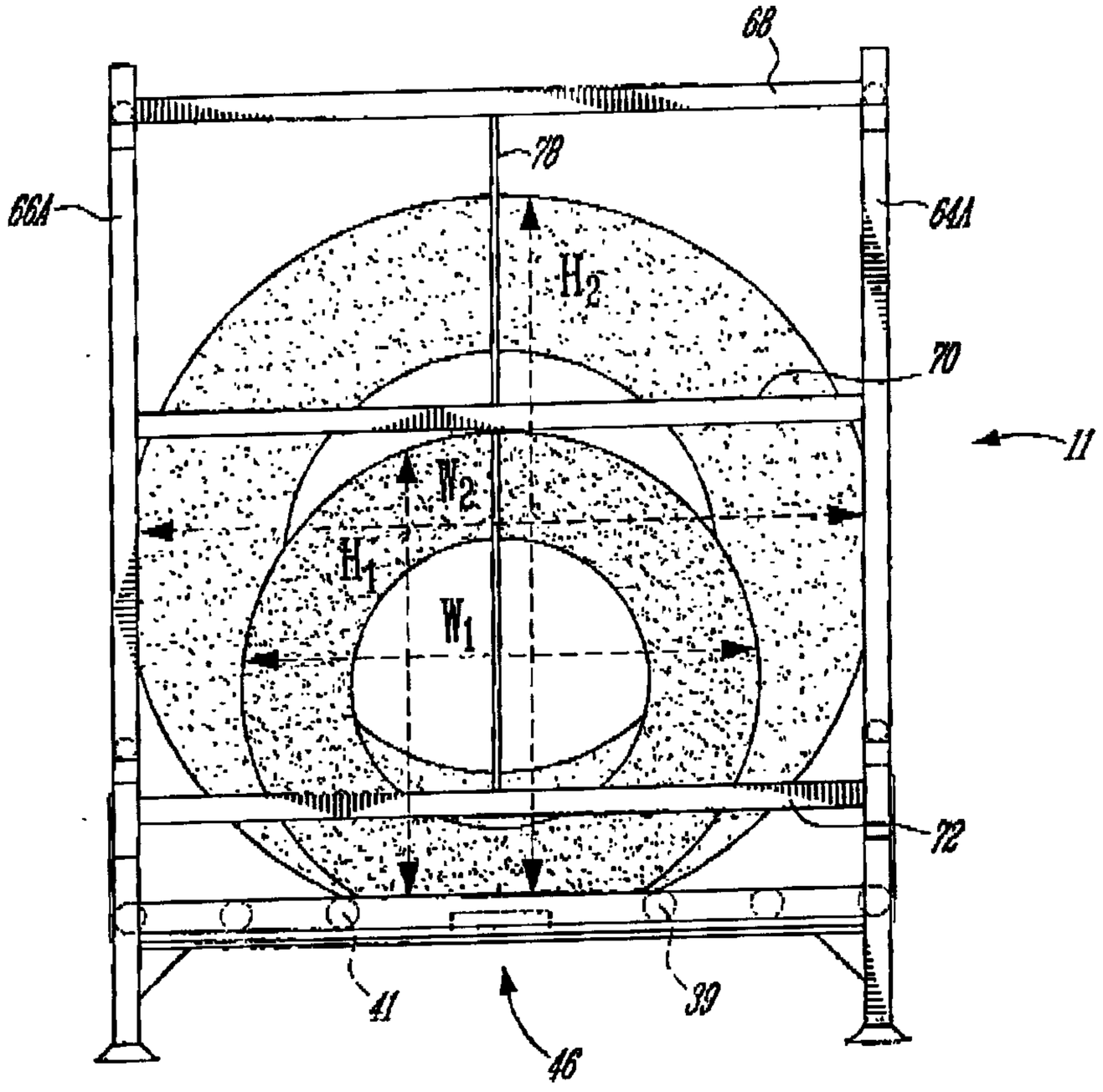

FIG. 4A

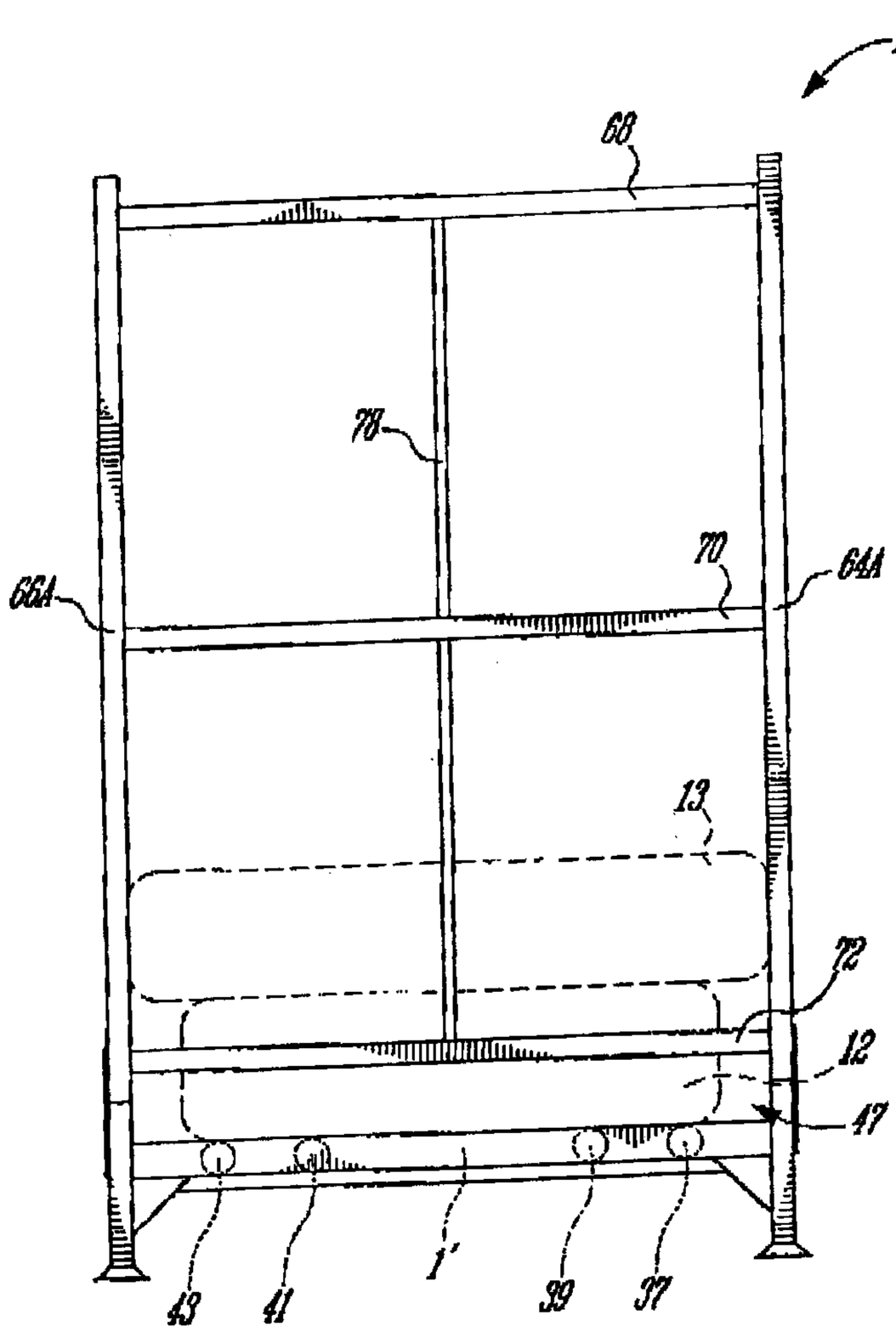

FIG_4B

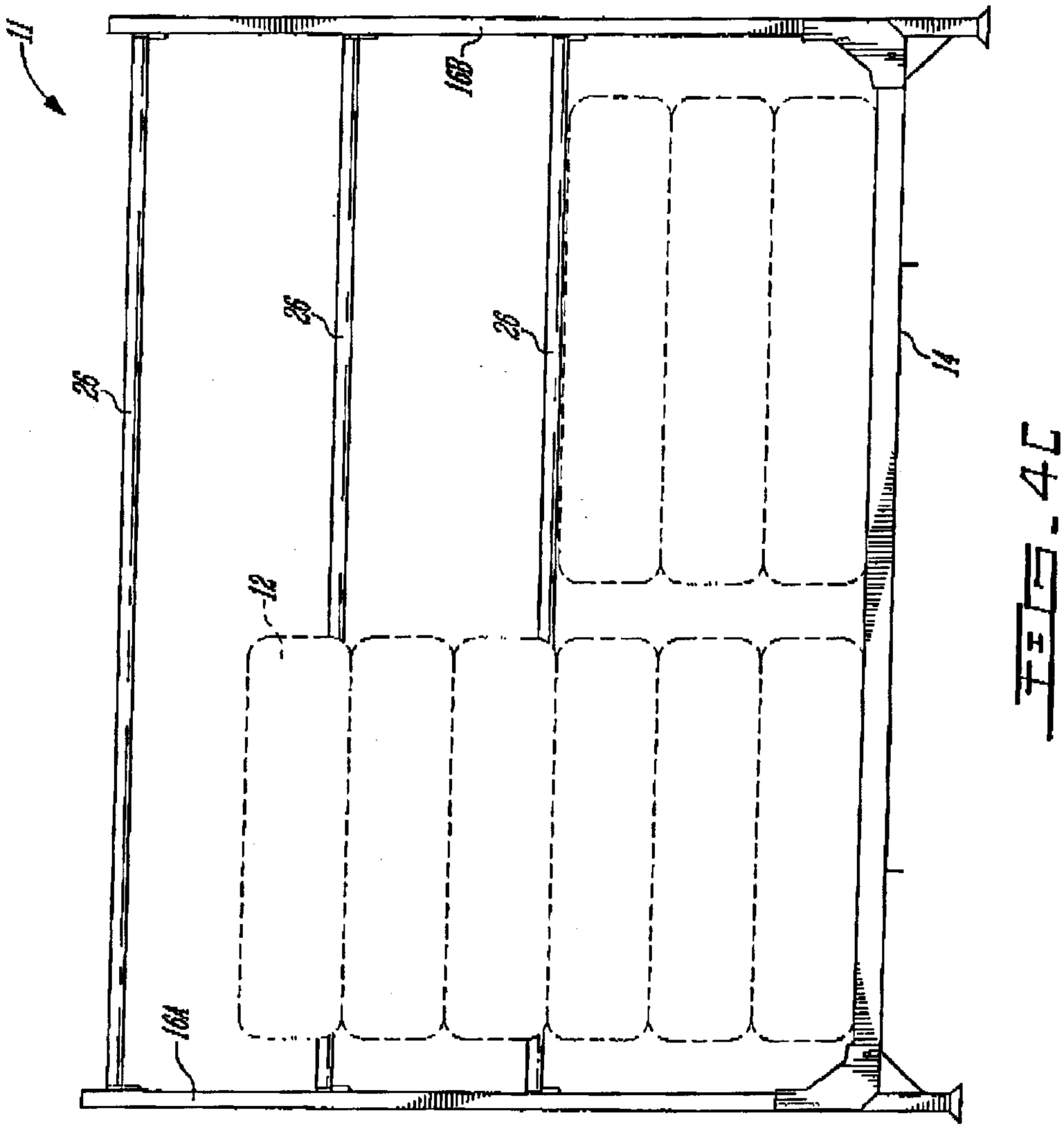

FIG. 4C

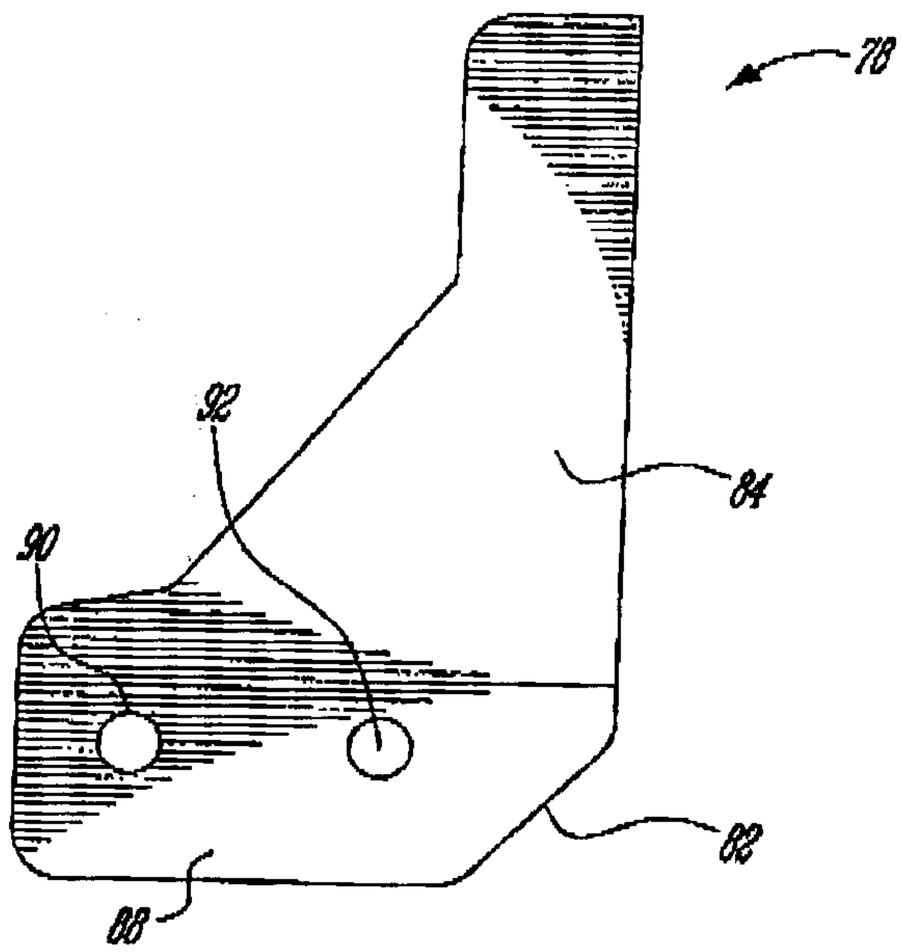

FIG. 5

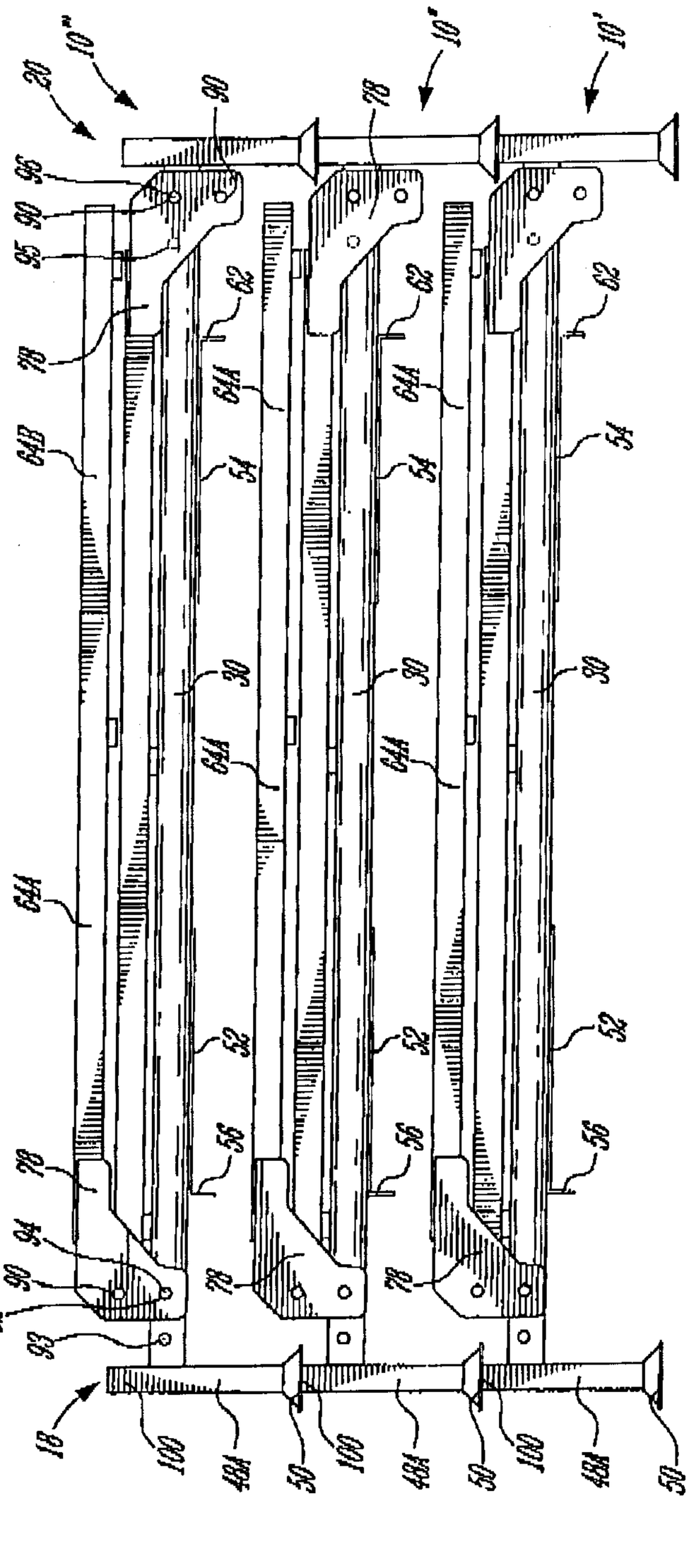
20
10"
90
78
10"
10'
96
90
95
62
64A
64B
54
30
64A
64A
64A
52
56
78
94
90
92
93
18
100
48A
50
100
48A
50
100
48A
50

FIG. 6

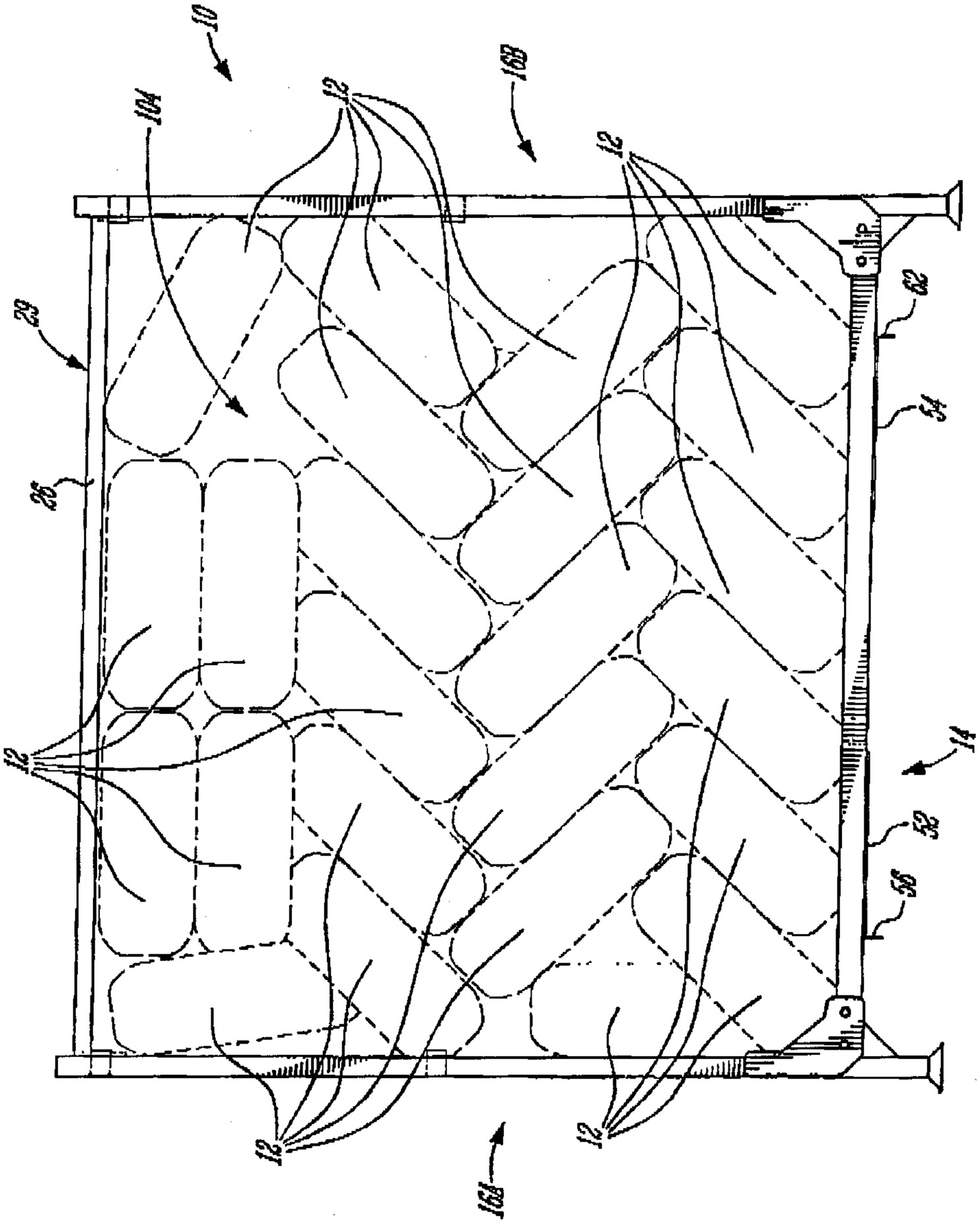
10
104
12
163
12
62
29
54
26
12
14
52
56
12
12
163

FIG - 8

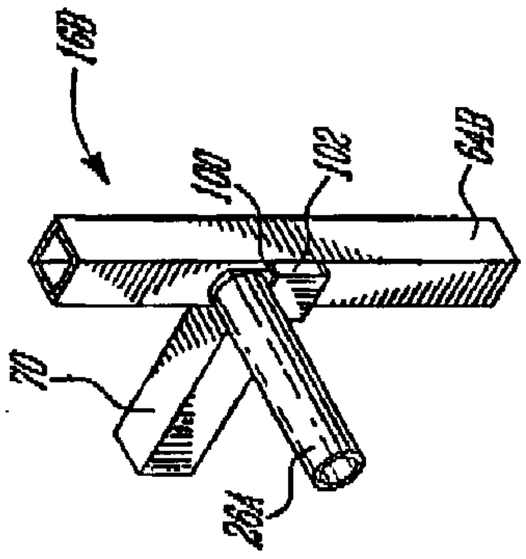
163
100
102
64B
70
28A

FIG - 7

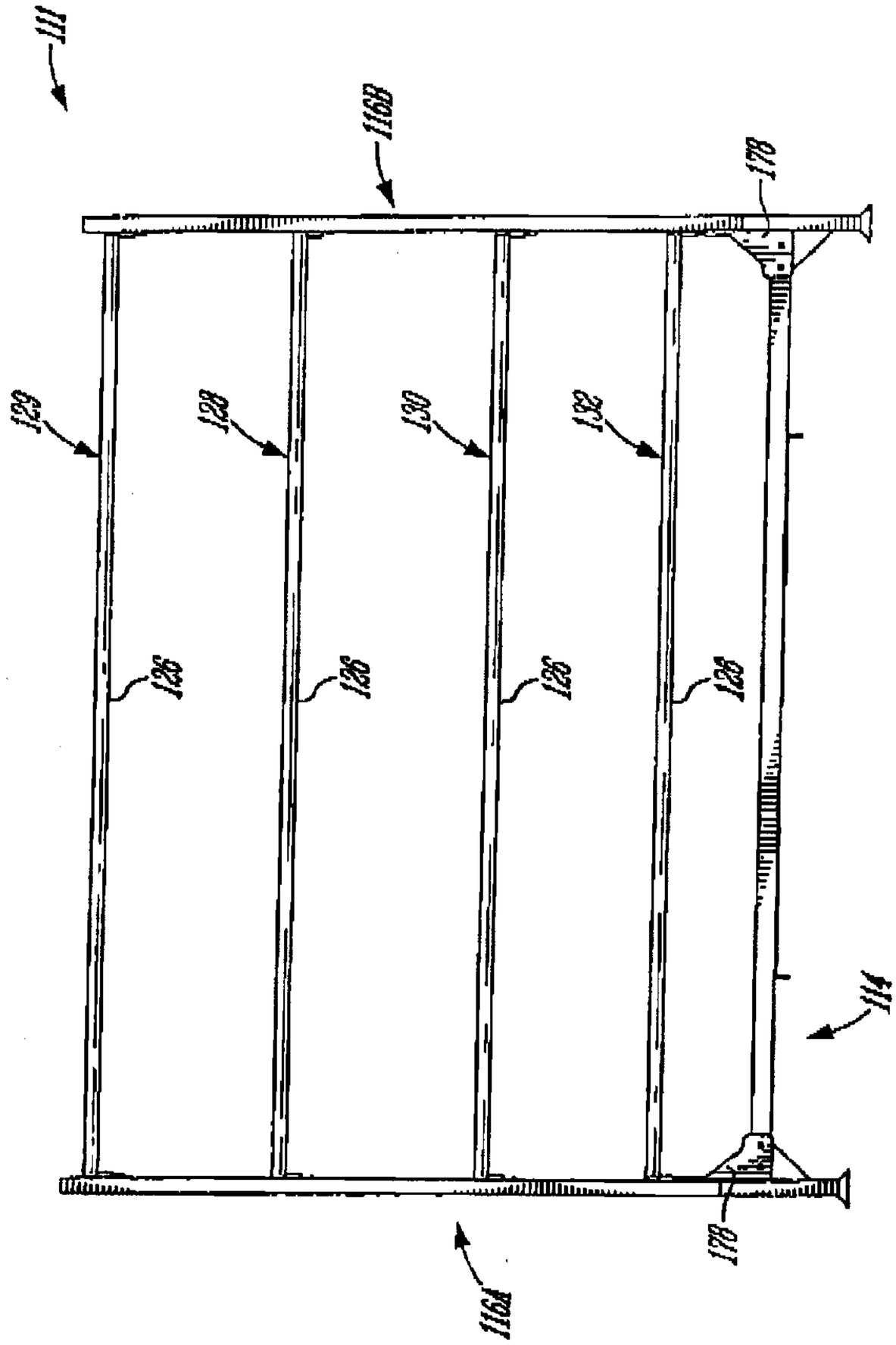

FIG. 9

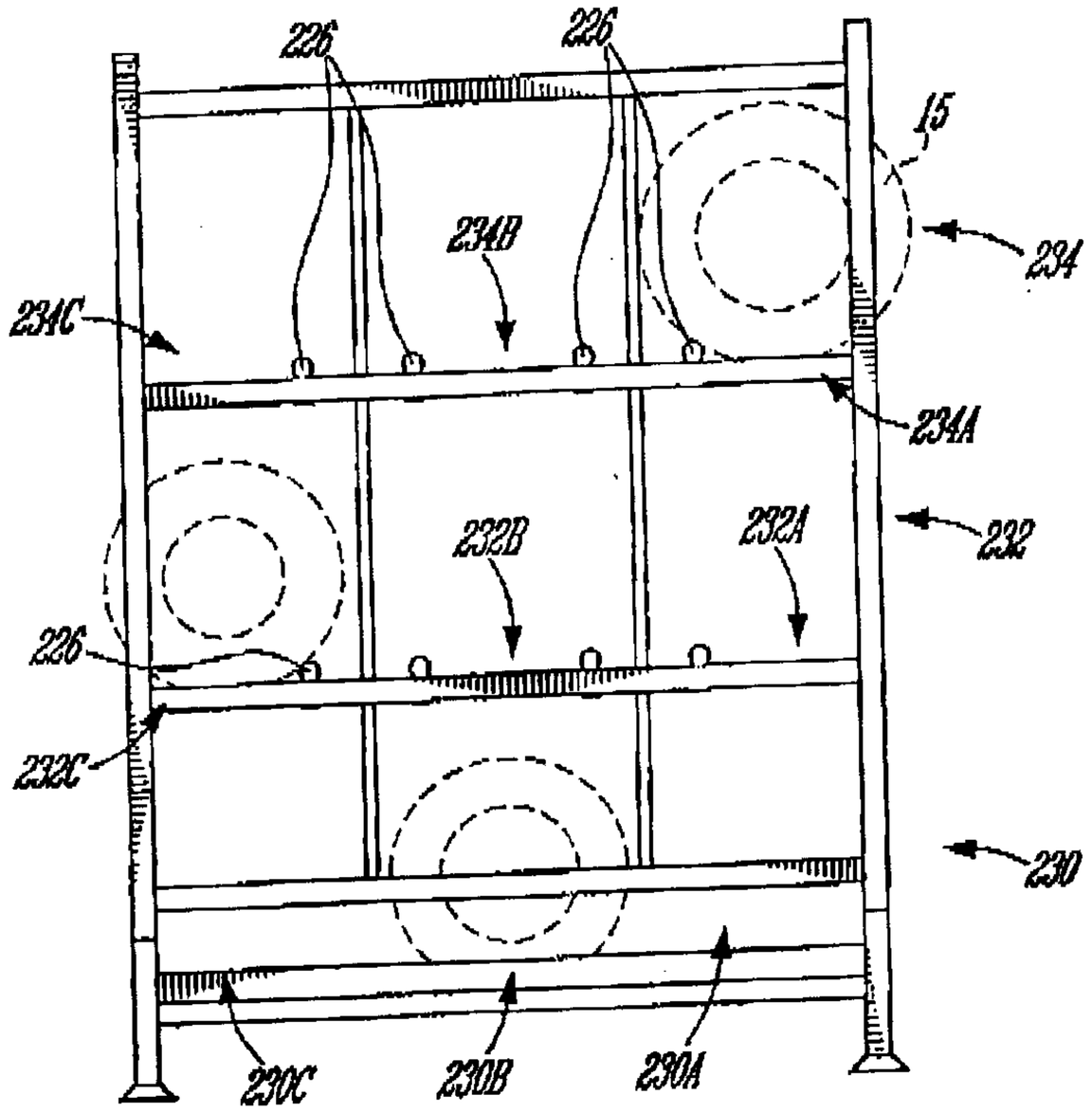
226
226
15
234
234B
234C
234A
232
232B
232A
226
232C
230
230C
230B
230A

FIG. 10

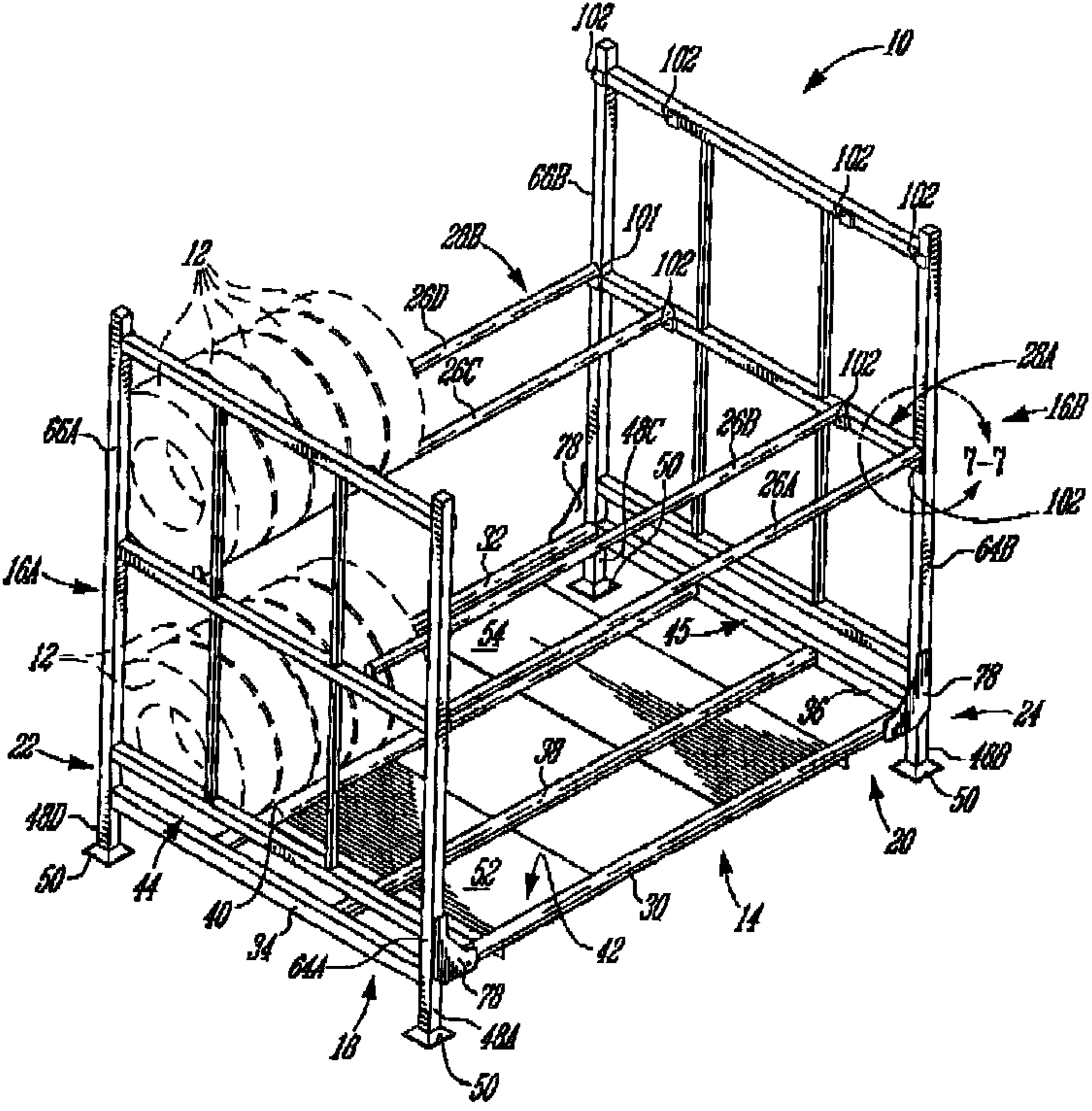

10
102
102
102
102
102
102
102
66B
101
28B
26D
26C
12
28A
16B
7-7
66A
78
48C
50
26B
26A
32
64B
16A
54
45
12
78
36
24
22
38
48B
50
48D
20
50
44
40
52
30
14
34
42
64A
78
18
48A
50