March 21, 1961 C. A. BERNSTEIN 2,975,454

CLEANING IMPLEMENT FORMED OF SPONGE RUBBER OR THE LIKE

Filed Oct. 8, 1957

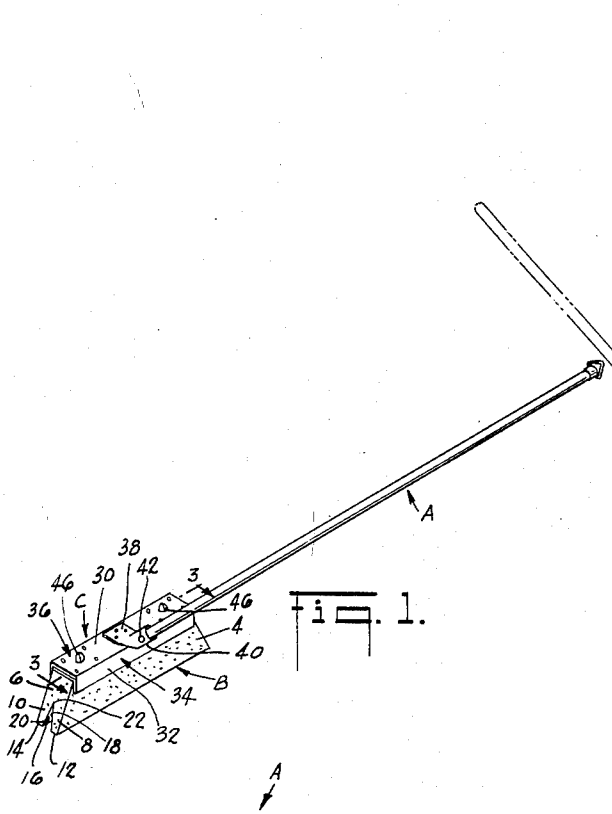

Fig. 1.

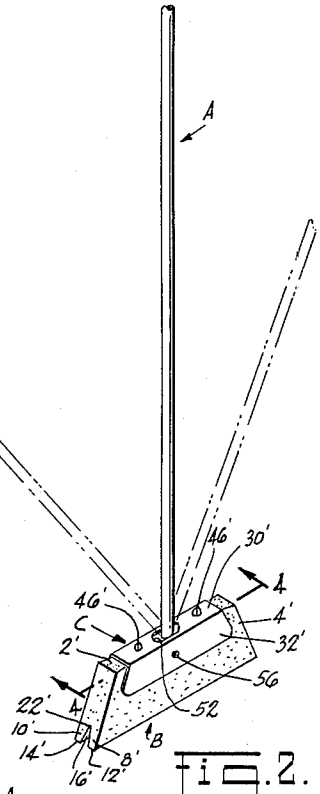

Fig. 2.

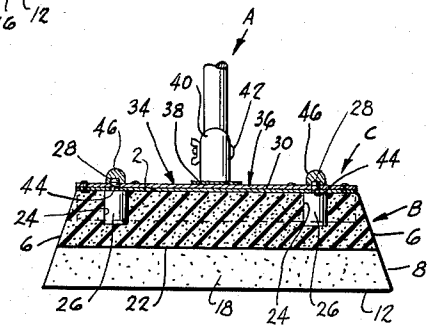

Fig. 3.

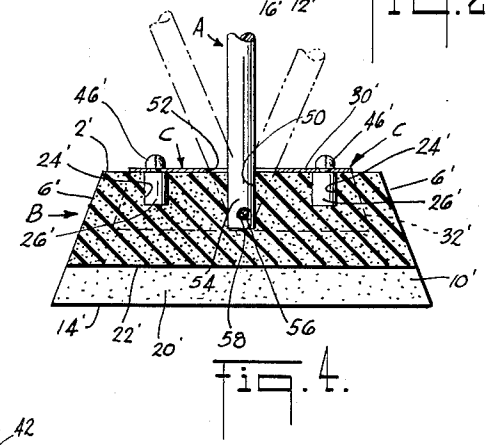

Fig. 4.

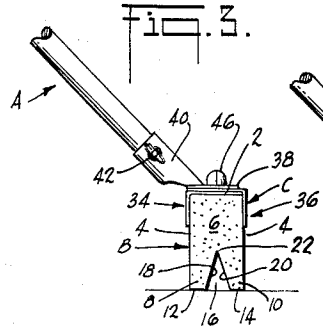

Fig. 5.

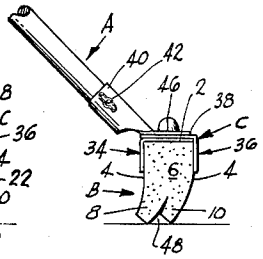

Fig. 6.

INVENTOR.
CHARLES A. BERNSTEIN

BY

James and Franklin

ATTORNEYS

United States Patent Office 2,975,454 Patented Mar. 21, 1961

2,975,454

CLEANING IMPLEMENT FORMED OF SPONGE RUBBER OR THE LIKE

Charles A. Bernstein, New York, N.Y., assignor to George S. Leiner & Co., New York, N.Y., a partnership

Filed Oct. 8, 1957, Ser. No. 688,940

12 Claims. (Cl. 15—244)

The present invention relates to the structure of a cleaning implement in the nature of a broom or mop, and in particular to one in which the body adapted to be rubbed over the surface to be cleaned is formed of resiliently flexible material.

The conventional type of broom consists of a handle to which a large number of bristles are operatively attached. As the broom is moved over the surface to be cleaned the bristles push the dirt or dust along to a point where the dust or dirt is accumulated and then removed in any appropriate manner, as through the use of a dustpan. In recent years it has been found that a much more effective cleaning action is produced when the actual cleaning body is formed, not from bristles, but from a mass of resiliently flexible material. Sponge rubber, either natural or synthetic, or comparable cellular materials formed of plastic, hereinafter termed "sponge-rubber-like" materials, are especially preferred, since such materials not only push or brush the dust across the floor but also, to an appreciable extent, cause the dust or dirt to adhere thereto and, in a sense, to be "absorbed" into the open cells thereof. Such materials are therefore exceptionally effective for removing thin layers of dust.

The use of bodies of sponge-rubber-like materials for this purpose has however created certain problems peculiar thereto. These bodies tend to become worn, and since it would be economically unfeasible to discard the entire broom merely because the cleaning body is no longer properly effective, those cleaning bodies must be readily detachable from the handle so that a new cleaning body can be attached thereto. The removability and detachability must be such that it can be accomplished by the ordinary housewife, who usually has but a minimal amount of mechanical skill. The cleaning body, when attached to the handle, must reliably be held in place, so that the cleaning body will always be presented to the surface to be cleaned in its position of maximum effectiveness, and it must be retained in that position with sufficient strength so as to withstand the sometimes severe dislocative forces to which it may be subjected, as when the cleaning body is pushed full force against an obstruction.

Cleaning bodies of the type under discussion are usually shaped so as to have maximum effectiveness when presented to the surface to be cleaned at a predetermined orientation therewith. In order that the cleaning body may operate with maximum effectiveness even in accessible places, and on walls and ceilings as well as floors, it is often desirable that the handle be articulately mounted relative to the cleaning body.

From a commercial point of view it is essential that brooms or mops have a minimal cost to the consumer, since the field is highly competitive.

In accordance with the present invention the removable and detachable cleaning body and the handle are connected by structure which facilitates the inexpensive manufacture and construction of the implement and which permits attachment and detachment to be accomplished

reliably and readily by means of exceedingly simple manipulations. The cleaning body is formed with recesses within which plugs are secured, the cleaning body and plugs constituting a replaceable unit. A bracket is secured to the handle and is adapted to encompass the cleaning body-plug unit and to overlie the plugs. A nut and screw connection is provided between the plugs and the bracket.

In addition, in one form of the invention, in order to provide for articulation of the handle the latter is pivotally mounted on the bracket and extends partway into the resiliently flexible cleaning body, a recess being provided in the cleaning body for that purpose. The connecting member passes through the cleaning body and thus serves as an auxiliary attaching element between the bracket and the cleaning body. In addition, the recess in the cleaning body within which the handle end is received may be of closely the same size as that handle end. Thus the cleaning body itself will tend to retain the handle in a given position relative to the cleaning body. When the handle is moved from that position a portion of the cleaning body will be compressed, thus providing a restoring function tending to return the handle to its initial position when force is no longer applied to the handle.

A very important feature of the present invention resides in the specific configuration of that end of the cleaning body which is adapted to be rubbed over the surface to be cleaned. It is defined by a pair of projections which are freely bendable and which are separated by a gap so related to the projections themselves that when those projections are flexed, as they will be when the implement is used, the projections will move against one another, collapsing the gap, and a space will be defined between the tips of the projections, within which space the swept dust or dirt may accumulate. This makes for better cleaning action not only by providing a plurality of cleaning edges or surfaces closely spaced relative to one another, but also by minimizing the degree to which dirt or dust may be left behind by the implement. In addition, by keeping the accumulated dust and dirt in contact with the porous material of which the cleaning body is formed over an appreciable period of time much more of that dust and dirt will be "absorbed" by the cleaning material, and hence a more effective cleaning action will result.

To the accomplishment of the above, and to such other objects as may hereinafter appear, the present invention relates to the structure of a cleaning implement as defined in the appended claims and as described in this specification, taken together with the accompanying drawings, in which:

Fig. 1 is a three-quarter perspective view of a push broom embodiment of the present invention;

Fig. 2 is a three-quarter perspective view of a sweep broom embodiment of the present invention in which the handle is articulately mounted relative to the cleaning body, various positions of the handle being shown in phantom;

Fig. 3 is a cross sectional view taken along the line 3—3 of Fig. 1;

Fig. 4 is a cross sectional view taken along the line 4—4 of Fig. 2;

Fig. 5 is an end elevational view of the push broom embodiment of Fig. 1 in its normal or "at rest" condition; and

Fig. 6 is a view similar to Fig. 5 but showing the implement in use and illustrating the position which the cleaning body projections then assume.

The cleaning implement of the present invention comprises a handle generally designated A, a cleaning body generally designated B and formed of some resilient, and

preferably resiliently flexible, material, such as sponge rubber or sponge-rubber-like materials, and a bracket generally designated C which serves to connect the handle A and the cleaning body B.

The cleaning body B is made in the form of a unitary insert which may readily be attached to or detached from the bracket C. It has a top wall 2, side walls 4, and end walls 6 which may be somewhat outwardly angled from top to bottom, and its bottom is defined, as here specifically disclosed, by a pair of longitudinally extending projections 8, 10 having bottom surfaces 12 and 14 respectively which are of appreciable width, on the order of one-fourth inch or one-half inch. The projections 8 and 10 are separated by a gap 16, the inner side walls 18 and 20 of the projections 8 and 10 respectively which define the gap 16 preferably tapering to the apex 22. The height of the gap 16 is substantially on the order of an inch or one and one-half inches, and its maximum width being at least comparable to the width of the projections 8 and 10 at their tips and, in the example here given, being approximately one-half inch.

The upper surface 2 of the body is provided with a pair of spaced recesses 24 within which plugs 26 formed of wood or the like are received and secured in any appropriate manner, as through the use of suitable adhesive. The plugs 26 are preferably substantially completely received within the recesses 24 so that the upper surfaces of the plugs do not project to an appreciable degree above the upper surface 2 of the body B. Externally threaded elements 28, however, extend up from the plugs 26. The plugs 26, it will be seen, are quite readily secured to the cleaning body B, provide a convenient means by which the cleaning body B can be incorporated into the cleaning implement, and, in addition, they reinforce and rigidify the upper portion of the cleaning body B.

The bracket C is formed of a suitable structural material such as metal and comprises a top wall 30 of substantially the same areal extent as the top surface of the body B, and side walls 32 extending down from the top wall 30, thus giving it a channel-shaped cross section, the width of the channel being substantially the same as the width of the upper portion of the cleaning body B. As specifically disclosed in Figs. 1, 3, 5 and 6, this U-shaped bracket C is formed from a pair of L-shaped members generally designated 34 and 36 the top walls of which rest upon one another and are secured together in any appropriate manner. Secured to the top wall 30 is a fitting 38 having an angularly projecting sleeve 40 within which the lower end of the handle A is adapted to be received, there to be held in any appropriate manner, as by means of the through screw 42. In this embodiment orientation of the handle A relative to the bracket C is therefore fixed, and is at an angle suitable for the device to be used as a push broom.

The top wall 30 of the bracket C is provided with apertures 44 through which the externally threaded elements 28 are adapted to project when the cleaning body B is inserted into the bracket C, and nuts 46 engage with the threaded elements 28 so as to releasably secure the unit defined by the cleaning body B, the plugs 26 and the threaded elements 28 to the bracket C.

It will be seen from the above that the cleaning body B is connected to the bracket C and handle A in a firm and reliable manner, with the upper surface 2 of the cleaning body B in engagement with the top wall 30 of the bracket C, and to the side walls 32 of the bracket C providing lateral support for the cleaning body B, and this along substantially the entire length of the cleaning body B. The implement is entirely disassemblable for storage purposes, and a worn-out cleaning body B may be removed and a new one inserted merely by unscrewing the nuts 46 and then screwing them back into place after the new cleaning unit has been inserted.

The significance of the configuration of the lower end of the cleaning body B, with its flexible projections 8 and 10 separated by the gap 16, will be apparent from a comparison of Figs. 5 and 6, Fig. 5 showing the implement in its normal or "at rest" condition and Fig. 6 showing the implement in use. When the implement is in use the cleaning body will be flexed downwardly onto the surface to be cleaned and slide forwardly therealong. Hence the projections 8 and 10 will flex and the gap 16 will collapse, the leading projection 10 moving rearwardly to lie against the trailing projection 8. However, the end surfaces 12 and 14 of the projections 8 and 10 will not be in line with one another, since the leading projection 10 will flex more than the trailing projection 8. There is therefore a space 48 defined between the end surface 12 of the trailing projection 8 and that portion of the side surface 20 of the projection 10 which extends beyond the projection 8, this space 48 being open to the surface being cleaned. Hence any dirt or dust which might escape the wiping agent of the leading projection 10 will find itself trapped within the space 48 and moved along with the brush. Also, when the cleaning body B is formed of cellular material within which dust or dirt will tend to be "absorbed," the fact that such dust or dirt is retained within the space 48 for an appreciable period of time, and is agitated while in that space by reason of the movement of the implement over the surface to be cleaned, will cause a greater proportion of the dust or dirt will be taken up by the material of which the projections 8 and 10 are formed.

In Figs. 2 and 4 the cleaning implement of the present invention is disclosed in the form of a sweeping broom as distinguished from a push broom. The construction is in the main similar to that of the push broom embodiment of Figs. 1, 3, 5 and 6, and similar reference numerals are applied thereto, being distinguished however by being primed.

There are, however, certain differences between the illustrated sweeping broom and push broom embodiments. It will be noted, for example, that in the sweeping broom embodiment the bracket C is formed of a single piece of metal or the like, instead of the two secured-together parts 34 and 36 in the push broom embodiment, and that the bracket C in the sweeping broom embodiment is somewhat shorter than the cleaning body B.

The attachment of the handle A to the bracket C in the sweeping broom embodiment is considerably different from that disclosed in the push broom embodiment. As disclosed in Figs. 2 and 4, the upper surface 2 of the cleaning body B is provided with a fairly deep recess 50 positioned between the recesses 24' and extending downwardly an appreciable distance into the cleaning body B. The top wall 30' of the bracket C is provided with an aperture 52 in line with but somewhat larger than the recess 50. The end 54 of the handle A passes through the aperture 52 in the bracket C and into the recess 50 in the cleaning body B. It is then pivotally secured to the side portions 32' of the bracket C by means of a removable screw 56 which extends between the side bracket portions 32', passes through the material of which the cleaning body B is formed on either side of the recess 50, and extends across the recess 50, there engaging the handle end 54 by passing through an aperture 58 formed therein. Thus the handle A is articulately mounted relative to the bracket C and the cleaning body B, being movable about the screw 56 as an axis and thus moving angularly substantially in the direction of the length of the cleaning body B. Hence the handle A may be held at whatever angle, within its permitted degree of movement, is most convenient to the user while still permitting the cleaning implement B to be presented to the surface to be cleaned in the most desirable and effective orientation. Moreover, the screw 56, since it passes through portions of the cleaning body B, aids in the retention thereof within the bracket C.

It is preferred that the recess 50 in the self-cleaning

body B be of a size, at least in the direction of permitted movement of the handle end 54, closely comparable to the corresponding dimension of the handle end 54. The resilient nature of the cleaning element B will therefore tend to retain the handle A in a predetermined position, here indicated as vertical. Movement of the handle A from that predetermined position is permitted, the material of the cleaning body B being compressed as the handle A moves (as may clearly be seen from Fig. 4). When the force tending to move the handle A to a position other than vertical is released the compressed portion of the cleaning body B will expand to its normal position and the handle A will be restored to its vertical position. Thus the cleaning body B itself serves to bias the handle A to a predetermined position, permits the handle A to be moved therefrom when desired, and tends to restore the handle A to its normal position.

It will be appreciated from the above that the cleaning implement here disclosed may be manufactured quite inexpensively but that it nevertheless has many desirable attributes both with respect to its cleaning ability, the ease with which it may be manipulated for cleaning purposes, and the facility and reliability involved in the removal and replacement of cleaning bodies B.

While but a limited number of embodiments are here specifically disclosed, it will be apparent that many variations may be made therein, all within the scope of the invention as defined in the following claims.

I claim:

1. A cleaning implement comprising an elongated body of resilient, readily compressible material having a plurality of longitudinally spaced recesses in a surface thereof, plugs adhesively secured within and substantially completely received within said recesses, a bracket extending over said body surface, a handle secured to said bracket, and interengaging elements on said plugs and said bracket for securing said bracket and handle to said body, in which said body has an additional recess, an end of said handle being received therein, the mounting between said handle and said bracket including means for mounting said handle for angular movement relative to said bracket, the size of said additional recess being closely the same as that of said handle end, thereby permitting said handle to move angularly through compression of said material but said material providing a restoring force tending to maintain said handle in a predetermined position relative to said bracket.

2. The implement of claim 1, in which the lower surface of said body comprises a pair of body portions extending longitudinally of said body and projecting downwardly therefrom, said body portions being free to flex laterally of said implement and being spaced from one another along their entire length by a longitudinally extending gap having a height, width and shape such that when said body portions are flexed in a direction substantially perpendicular to their length the trailing body portion will rest against the opposed side surface of the leading body portion with the end surface of said trailing body portion extending from said opposed side surface of said leading body portion so as to define a downwardly opening longitudinally extending space therebetween.

3. The implement of claim 1, in which the lower surface of said body comprises a pair of tapered body portions extending longitudinally of said body and projecting downwardly therefrom, said body portions being free to flex laterally of said implement and being spaced from one another along their entire length by a longitudinally extending and upwardly tapered gap having a height and width such that when said body portions are flexed in a direction substantially perpendicular to their length the trailing body portion will rest against the opposed side surface of the leading body portion with the end surface of said trailing body portion extending from said opposed side surface of said leading body portion so as to define a downwardly opening longitudinally extending space therebetween.

4. A cleaning implement comprising an elongated body of resilient, readily compressible material having a plurality of longitudinally spaced recesses in a surface thereof, plugs adhesively secured within and substantially completely received within said recesses, a bracket extending over said body surface, a handle secured to said bracket, and interengaging elements on said plugs and said bracket for securing said bracket and handle to said body, in which said bracket has a portion extending along a surface of said body, said body has an additional recess in line with said bracket portion, and said bracket has an aperture in line with and larger than said additional recess, an end of said handle passing through said aperture and into said additional recess, said handle being pivotally secured to said bracket, the size of said additional recess being closely the same as that of said handle end, thereby permitting said handle to move angularly through compression of said material but said material providing a restoring force tending to maintain said handle in a predetermined position relative to said bracket.

5. The implement of claim 4, in which the lower surface of said body comprises a pair of body portions extending longitudinally of said body and projecting downwardly therefrom, said body portions being free to flex laterally of said implement and being spaced from one another along their entire length by a longitudinally extending gap having a height, width and shape such that when said body portions are flexed in a direction substantially perpendicular to their length the trailing body portion will rest against the opposed side surface of the leading body portion with the end surface of said trailing body portion extending from said opposed side surface of said leading body portion so as to define a downwardly opening longitudinally extending space therebetween.

6. The implement of claim 4, in which the lower surface of said body comprises a pair of tapered body portions extending longitudinally of said body and projecting downwardly therefrom, said body portions being free to flex laterally of said implement and being spaced from one another along their entire length by a longitudinally extending and upwardly tapered gap having a height and width such that when said body portions are flexed in a direction substantially perpendicular to their length the trailing body portion will rest against the opposed side surface of the leading body portion with the end surface of said trailing body portion extending from said opposed side surface of said leading body portion so as to define a downwardly opening longitudinally extending space therebetween.

7. The implement of claim 4, in which said bracket has portions extending along the sides of said body and said handle is secured to said bracket side portions by a member connected to said bracket side portions, penetrating said body, and passing through said additional recess and an aperture formed in said handle end.

8. The implement of claim 7, in which the lower surface of said body comprises a pair of body portions extending longitudinally of said body and projecting downwardly therefrom, said body portions being free to flex laterally of said implement and being spaced from one another along their entire length by a longitudinally extending gap having a height, width and shape such that when said body portions are flexed in a direction substantially perpendicular to their length the trailing body portion will rest against the opposed side surface of the leading body portion with the end surface of said trailing body portion extending from said opposed side surface of said leading body portion so as to define a downwardly opening longitudinally extending space therebetween.

9. A cleaning implement comprising an elongated body of readily compressible material having a plurality of longitudinally spaced recesses in a surface thereof, plugs adhesively secured within and substantially completely

received within said recesses, a bracket extending over said body surface, a handle secured to said bracket, and interengaging elements on said plugs and said bracket for securing said bracket and handle to said body, said body being elongated and formed of absorbent material having the resilient properties of sponge rubber, said body having substantially vertical side walls and a substantially horizontal bottom wall, said bottom wall being divided into two longitudinally extending sections of appreciable width on the order of one-fourth inch to one-half inch by a longitudinally extending gap of comparable width, said gap extending up into said body for a height from two to three times greater than said width and tapering substantially to a point, thereby defining two separated body portions the tips of which define said bottom wall sections, said body having a height at least twice that of said gap, said body portions, when flexed in a direction substantially perpendicular to their length, engaging one another substantially completely along their opposed gap surfaces, the tip of the leading body portion then extending from the exposed gap surface of said trailing body portion to define a longitudinally extending space therebetween within which dirt may be trapped and thus more efficiently absorbed by said body.

10. A cleaning implement comprising an elongated body of resilient compressible material secured to a bracket which extends thereover, said body having a recess beneath said bracket, a handle articulately secured to said bracket and having an end extending into said body recess, the size of said recess being closely the same as that of said handle end, said handle thereby compressing said material when said handle moves relative to said bracket but said material providing a restoring force tending to maintain said handle in a predetermined position relative to said bracket.

11. The cleaning implement of claim 10, said bracket having an opening larger than said handle end, said handle end passing through said opening and into said body recess.

12. The cleaning implement of claim 11, in which said bracket extends over the top and sides of said body, said body recess being on the top surface of said body and said bracket opening being on the top part of said bracket, said handle being secured to said bracket side portions by a member connected to said bracket side portions, penetrating said body, and passing through said body recess and an aperture formed in said handle end.

References Cited in the file of this patent

UNITED STATES PATENTS

1,586,337	Stockwell	May 25, 1926
1,755,155	Storrie	Apr. 15, 1930
1,771,824	Storrie	July 29, 1930
2,716,769	Satterfield	Sept. 6, 1955
2,740,146	Vaughn	Apr. 3, 1956
2,793,384	Ortega	May 28, 1957
2,796,617	Bradshaw	June 25, 1957
2,840,843	Vavrinek	July 1, 1958

FOREIGN PATENTS

2,627	Great Britain	of 1911
151,259	Austria	Nov. 10, 1937
466,474	Canada	July 11, 1950
807,925	France	Oct. 26, 1936