Dec. 29, 1964 I. P. THOMPSON ETAL 3,163,559

WATER JET METHOD OF DESLAGGING A METAL SURFACE

Original Filed Nov. 12, 1957

FIG. 1

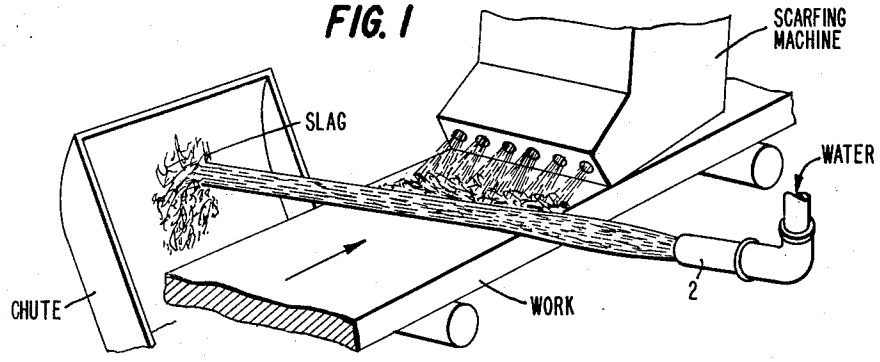

FIG. 2

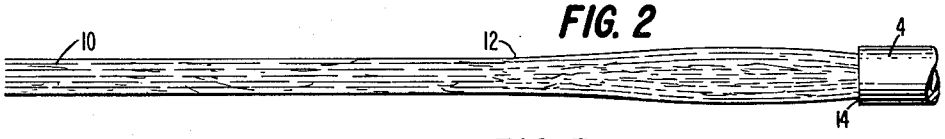

FIG. 3

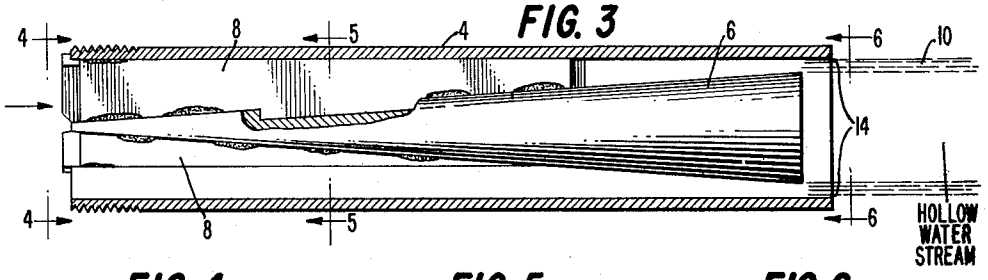

FIG. 4

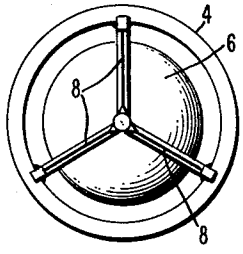

FIG. 5

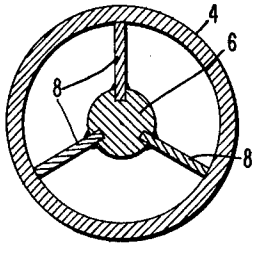

FIG. 6

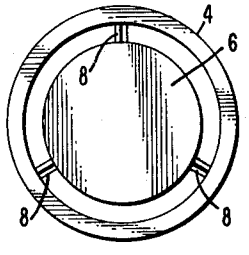

FIG. 7

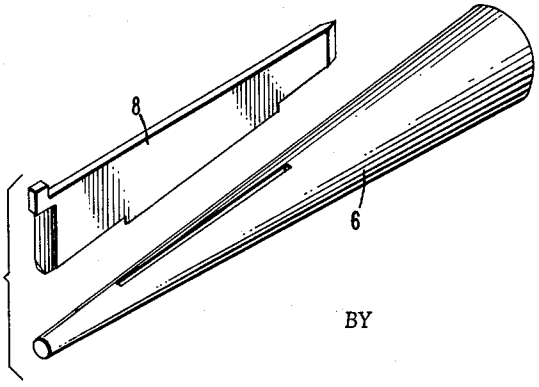

INVENTORS
IVAN P. THOMPSON
EDWARD H. MOUSTED

BY Leo A. Plumb

ATTORNEY

United States Patent Office 3,163,559 Patented Dec. 29, 1964

3,163,559

WATER JET METHOD OF DESLAGGING A METAL SURFACE

Ivan P. Thompson, Hillside, and Edward H. Mousted, Garwood, N.J., assignors to Union Carbide Corporation, a corporation of New York

Original applications Nov. 12, 1957, Ser. No. 695,846, and Feb. 25, 1960, Ser. No. 11,947, now Patent No. 3,062,456, dated Nov. 6, 1962. Divided and this application Sept. 17, 1962, Ser. No. 224,188

1 Claim. (Cl. 134—34)

This invention relates to a process for removing the slag and waste products from thermochemically desurfaced metal slabs.

The metal shapes produced by steel mills customarily have surface defects which it is desirable to remove. This removal is most commonly accomplished by a thermochemically desurfacing method known as "scarfing" which consists of projecting on such surfaces a voluminous oxygen stream accompanied by burning oxy-fuel-gas streams to convert the surface to a partially oxidized molten product or slag. The resultant slag must then be removed so that a clean surface will result. One common means for removing the resultant slag from the desurfaced slab is by high pressure water jets. When sufficiently high pressure jets are used, the slag is granulated and washed away leaving a cleaned billet, free of surface defects.

In recent years, scarfing machines have been developed which are capable of handling slabs of widely divergent sizes and shapes. It soon became apparent that conventional water jet configurations were incapable of performing efficiently with all slab sizes. During desurfacing of the narrower slabs, for instance, the nozzle producing the horizontal water jet may be over three feet from the near edge of the slab. Previously employed water nozzles produced streams which are incapable of effectively skimming the slab from such a distance. Further, divergence of the stream not only decreases the available force of the jet at the surface of the slab but causes some water to strike the edge of the slab with the possible development of an undesirable "black spot" due to uneven chilling. The diverging stream also causes both water and slag to spatter onto the desurfacing machine and onto the desurfacing reaction area, thus creating mechanical and electrical difficulties in the machine itself as well as interfering with the reaction of the desurfacing process.

It is a primary object of the present invention to provide a more efficient method of disposing of the slag created by normal steel mill desurfacing procedures.

It is a further object of the present invention to provide a method of disposing of slag capable of more exact control of the point of impingement of the water jet on a surface.

It is a further object of the present invention to provide a method of disposing of slag using a high pressure water stream which will substantially reduce uncontrollable spatter of solid particles and water in undesirable directions.

It is a further object of the present invention to provide a water jet capable of imparting a substantially constant impact pressure to a surface at various distances from the nozzle.

Other objects, features and advantages of the present invention will become apparent from the following detailed description taken in conjunction with the accompanying drawings wherein:

In accordance with these objects an invention is provided in the water jet method of deslagging a surface of a metal slab subsequent to said slab being thermally

treated by impinging thereon an oxy-fuel-gas flow to form said slag, the improvement therewith which comprises, forming a flow of fluid under pressure through a conduit, forming said flow into a high pressure hollow stream having a substantially constant outer diameter and directing said constant diameter stream tangentially along said surface to contact the slag formed thereon while minimizing contact of the stream with the slab surface whereby said slag is carried from said surface.

The use of a hollow, constant diameter stream results in a more efficient and complete removal of slag from the slab. The drawings show apparatus which gives a hollow constant diameter stream. Other types of apparatus, not shown, will also give the hollow stream needed for the process of this invention. The hollow, constant diameter streams more efficiently skim the surface of a scarfed slab removing the slag formed thereon by a desurfacing operation. Whereas diverging, solid water jets used before tend to splatter over the surface of the slab sending slag and water in all directions, the hollow, constant diameter stream has the necessary stability and lack of turbulence required to effect excellent slag granulation and removal. Such results are not achieved by merely increasing the velocity of the stream, but are achieved here by the use of the hollow water stream.

In the drawings:

FIG. 1 is an illustration in perspective of a nozzle in position to remove the slag produced by a scarfing machine;

FIG. 2 is a side view showing the jet produced;

FIG. 3 is a view of a longitudinal section through a nozzle capable of use in the process of this invention indicating the internal construction of the nozzle and the manner in which the water jet is formed;

FIGS. 4–6 are end cross sectional views taken on lines 4—4, 5—5, and 6—6 as shown in FIG. 3; and

FIG. 7 is an exploded perspective view of the core and one fin, showing the manner of construction.

With reference to FIG. 3, it will be seen that nozzle 2 comprises an outer tube or cylinder 4, an inner conical core 6 in axial alignment with the tube 4 and held in fixed position by a multiplicity of radial fins 8.

The cone 6 is positioned in such a manner that its small end is upstream. Fins 8 are tapered at both upstream and downstream ends to minimize disturbance of stream flow. The downstream end of aperture 14 of the outer tube or sleeve 4 projects slightly beyond the base of the cone 6 for the best results. This configuration results in a stream 10 which initially converges somewhat upon departure from the nozzle to form a vena contracta 12 and then expands to a uniform diameter substantially that of the nozzle. The distance between the aperture 14 and the vena contracta 12 varies in proportion to the distance the outer sleeve 4 projects beyond the inner cone 6. In one embodiment of the invention, the outer sleeve 4 is formed of two inch internal diameter tubing and has a length of $11\frac{13}{16}$ inches. The cone 6 is $11\frac{5}{16}$ inches long with a maximum diameter of $1\frac{5}{8}$ inches and is supported by three equi-angularly spaced supporting fins 8 to combine high maximum stability with minimum flow resistance and turbulence. The distance between the base of the cone 6 and the downstream end of sleeve 4 is ½ inch. When formed with these dimensions and operated with an inlet pressure of about 100 p.s.i., the vena contracta occurs two feet from the nozzle. This stream produces no appreciable "fan-out" over a distance of at least eight feet from the nozzle. Furthermore, this nozzle produces a stream of high velocity which effects excellent slag granulation and removal.

While one nozzle has been specifically described in connection with the process of this invention, it is to be

understood that the invention is not so limited in application and that other nozzles discharging hollow, constant diameter water jets may be employed.

This application is a division of copending application Serial No. 11,947, filed February 25, 1960 now Pat. No. 3,062,456, and abandoned application Serial No. 695,846, filed November 12, 1957.

What is claimed is:

In the water jet method of deslagging a surface of a metal slab subsequent to said slab being thermally treated by impinging thereon an oxy-fuel-gas flow to form said slag, the improvement therewith which comprises, forming a flow of fluid under pressure through a conduit, forming said flow into a high pressure hollow stream having a substantially constant outer diameter and directing said constant diameter stream tangentially along said surface to contact the slag formed thereon while minimizing contact of the stream with the slab surface whereby said slag is carried from said surface.

References Cited in the file of this patent

UNITED STATES PATENTS

2,357,695	Skowron	Sept. 5, 1944
2,873,224	Thompson et al.	Feb. 10, 1959