FORM 2
THE PATENTS ACT 1970
(39 of 1970)
&
The Patents [Amendment] Rules, 2006
PROVISIONAL SPECIFICATION

(See section 10 and rule 13)

1. TITLE OF THE INVENTION

A Multistage Controlled Bio-Digestion Process For Production Of Usable Energy From Waste Biomass And Organic Materials

2. APPLICANT:

NAME : Indian Oil Corporation Limited

NATIONALITY : IN

ADDRESS : G-9, Ali Yavar Jung Marg, Bandra (East), Mumbai-400 051, India

3. PREAMBLE TO THE DESCRIPTION

PROVISIONAL

The following specification describes the invention :

FIELD OF THE INVENTION

The present invention relates to a multistage controlled biodigestion process for production of usable energy in the form of methane from waste biomass and organic materials. More particularly this invention relates to the process for production of biogas with enhance methane content and lesser amount of carbon-dioxide in gas mixture for usage as a fuel or energy source.

BACKGROUND OF THE INVENTION

When the organic waste is degraded by the natural uncontrolled process, it produces green house gases like CH_4 and CO_2, which effect the environment adversely. Hence, their disposal in controlled manner is essentially required. On the other hand, in the recent times a worldwide energy shortage has prompted a search for non-fossil source of energy. One obvious source of energy is production of methane through anaerobic digestion of any organic carbonaceous material which is susceptible to biodegradation like wastewater, biomass residues, municipal waste, food industry waste, animal manure etc.

Anaerobic digestion is a series of processes in which biodegradable material is broken down by microorganisms and biochemical processes in the absence of oxygen. There are four biochemical metabolic processes that take place successively, but also in parallel and interacting with one another, leading to the degradation of organic fermentation substrates to the end products methane and carbon dioxide: hydrolysis, acidogenesis, acetogenesis and methanogenesis.

In hydrolysis, high-molecular weight insoluble organic polymers such as carbohydrates, proteins, lipids and the like are broken down into some variety of sugars and/or amino acids, and make them available for another consortium of bacteria. In this process, the gaseous products that are also formed consist mainly of carbon dioxide.

Acidogenic bacteria then convert the hydrolyzed products (e.g. mono- and disaccharides, di- and oligopeptides, amino acids, glycerol, long-chain fatty acids) to short-chain fatty acids or carboxylic acids, for example butyric, propionic and acetic acid, to short-chain alcohols such as ethanol and to the gaseous products hydrogen and carbon dioxide.

In the subsequent acetogenesis, the short-chain fatty acids and carboxylic acids formed in acidogenesis and the short-chain alcohols are taken up by acetogenic bacteria and, after β-oxidation, are excreted again as acetic acid. By-products of acetogenesis are CO_2, H_2S and molecular hydrogen (H_2). The products of acetogenesis such as acetic acid, and also other substrates such as methanol and formate, are converted by methane-forming organisms to methane and CO_2 in the anaerobic methanogenesis.

Raw biogas is composed of 50–60% CH_4, 30–40% CO_2 and small amount of H_2S but for high calorific value of biogas, the ratio of methane to CO_2 needs to be increased. Generally methane content is enriched by scrubbing of the biogas by physiochemical and ex-situ treatment methods as pressure swing adsorption (PSA), absorption and membrane separation techniques. While these techniques are effective at CO_2 removal, but they not only require complicated operating systems but produce unwanted end products that need further treatment. Moreover, these techniques add cost to the process further. Hence, scrubbing after product is obtained will not be desirable but in-situ transformation of the CO_2 to methane and removal of H_2S will be desirable. In this direction, approach that promises biogas upgradation involves the use of bioelectrochemical systems that allow microorganisms to convert CO_2 into CH_4 when electricity and water are provided as the only energy and electron sources. Beside CO_2, removal of H_2S is also important as it is harmful to human and animals. At the lower concentration H_2S imparts unpleasant odor to the biogas but at a higher concentration it can even pose as a threat to the life. Hence, its removal is also necessary. Therefore, it will be desirable to have in-situ transformation H_2S to some non -toxic substance.

WO 2010046914 A1 discloses a method for improving biogas generation by segregation of the two stages i.e. acidogenesis and methanogenesis by means of two separate reactors and semi- permeable membrane units. This document claims improved delivery of the volatile fatty acids (VFA) to methanogenesis stage but does not talk about reducing the CO_2 or H_2S concentration. Moreover the use of semi-permeable membrane to large scale reactor will be cost intensive and its fouling will be also an issue.

US 20140186929 A1 entitled “Compositions and methods comprising a combination silage inoculants” discloses compositions comprising a combination microbial inoculant, silage produced from forage inoculated with the combination microbial inoculant, and biogas produced from the silage. Various methods are provided for increasing biogas production and decreasing dry matter loss by inoculating forage with a combination inoculant. This prior art does not talk about reducing the CO_2 or H_2S concentration in biogas and increasing the concentration of methane.

Research paper entitled “Direct Biological Conversion of Electrical Current into Methane by Electromethanogenesis” (*Environ. Sci. Technol.* 2009, *43,* 3953–3958) discloses a process called electromethanogenesis where at a set applied potential, carbon dioxide was reduced to methane. This paper discusses the conversion of CO_2 to methane and not about organic digestion of organic waste to methane. Moreover, it does not talk about the reduction of H_2S content in the produced biogas.

US 8440438 entiled “Electromethanogenic reactor and processes for methane production” discloses a biological process for producing methane gas and capturing carbon from carbon dioxide in an electromethanogenic reactor having an anode, a cathode and a plurality of methanogenic microorganisms disposed on the cathode. Electrons and carbon dioxide are provided to the plurality of methanogenic microorganisms disposed on the cathode. The methanogenic microorganisms reduce the carbon dioxide to produce methane gas, even in the absence of hydrogen and/or organic carbon sources. This invention discusses about conversion of CO_2 to CH_4 but

does not provide a situation where organic waste material is also present in the cathode along with CO_2. Moreover, it does not talk about the reduction of H_2S content.

Research article entitled "Bioelectrochemical removal of carbon dioxide (CO_2): An innovative method for biogas upgrading (Bioresource Technology 173 (2014) 392–398)" describes a methods for biogas upgrading based on biological/in-situ concepts. Bioelectrochemical removal of CO_2 for biogas upgrading was proposed and demonstrated in both batch and continuous experiments in two chamber reactor. The proposed method could reduce CO_2 content up to 10%. This method involves use of two chambered cells and costly membranes which is difficult to upscale. Moreover, it does not talk about the reduction of H_2S content and improvement in any other stages of the anaerobic digestion process.

US 20100107872 entitled "Biogas upgrading" discloses a process and apparatus for treating a biogas stream with respect to reducing H_2S content and increasing CH_4 content by scrubbing. This adds a step in the biogas production system.

In view of above, there is need for a process which performs the following:

- facilitates the hydrolysis of biomass/organic waste
- converts the hydrolyzed product to VFA particularly to the acetic acids
- recycles the CO_2 formed at different stage of process to methane
- reduces in-situ H_2S production

BRIEF DESCRIPTION OF THE DRAWINGS

Fig 1: Schematic diagram showing various steps of present invention

DESCRIPTION OF THE INVENTION

The present invention discloses a multistage controlled biodigestion process for production of usable energy in the form of methane from waste biomass and organic materials.

The present invention provides a process which facilitates the hydrolysis of biomass/organic waste, converts the hydrolyzed product to VFA particularly to the acetic acids, recycles the CO_2 formed at different stages of the process to methane, converts CO_2 to methane in-situ, enhances the methanogenesis process by electric current and reduces the in-situ H_2S concentration.

In accordance with the present invention, an integrated process (Figure-1) for biomethanation of organic waste is provided, comprising:

1. Pre-treatment of organic waste;
2. Hydrolysis of pretreated organic waste;
3. Acidogenesis of hydrolysed organic waste; and
4. Electro-assisted biomethanogenesis stage coupled with the CO_2 conversion and H_2S reduction.

The pretreatment step is required to facilitate the hydrolysis of the biomass/organic waste. According to present invention the pre-treatment of the organic waste and biomass can be done by chemical, physical or biological means. It also include activities like shredding, pulverization etc. The gaseous effluent, if produced during this stage is transferred to electro-assisted biomethanogenesis reactor.

In an embodiment of the present invention, irrespective of the chemical difference between various organic waste product, a simple heat treatment and in particular heat treatment in combination of alkali treatments leads to improved hydrolysis and acidogenesis.

In accordance with the present invention, the hydrolysis step is required for conversion of pre-treated waste to low molecular weight components by action of selective microbial consortia in an aqueous media containing an optimized nutrient system. This step takes 1-14 days at temperature ranging from 20- 70 degree C and requires mixing under micro-aerophilc conditions and/or anaerobic conditions. From this stage 70% of the hydrolysed residue is transferred to the acidogenesis stage and remaining is used

as inoculum for next batch of the organic waste. The gaseous effluent produced during this stage is transferred to electro-assisted biomethanogenesis reactor. The microbial consortia disclosed herein for hydrolysis include a combination of the microbes producing esterase, proteases, laccase, cellulase and hemicellulase enzymes. In an embodiement the microbial inoculum includes, but is not limited to, *Ruminococcus* sp., *Lactobacillus* sp., *Bacillus licheniformis, Bacillus subtilis, Pseudomonas* sp., *Streptococcus* sp. or functional mutants thereof. These microbes are effective if minimum 10^2 cfu/g of the organic waste/biomass are present. In another embodiment, the free or immobilized enzymes obtained from above mentioned microbial species or any other sources can also be used in hydrolysis process. In an embodiment, strains *Bacillus subtlis (*MTCC 5386), *Bacillus* sp. (MTCC 5662),*Bacillus cereus* (MTCC 5665) and *Lysinibacillus* sp. (MTCC 5666) can also be used alone or in any combination for hydrolysis.

In an aspect of the present invention a nutrient system is fed to the hydrolysis reactor containing in (g/L) KH_2PO_4 (0.5-4.8), K_2HPO_4 (0.5-5), $MgSO_4$ (0.01-1.0), $(NH4)_2SO_4$ (0.25-0.50), KNO_3 (0.15-4.75), Urea (0.15-4.75), Di-ammonium phosphate (0.15-4.75), ZnSO4 (0.2-2.1), NaCl (0.2-10) Trace element (2ml to 10 ml of solution). The trace element solution (gram per liter) comprises Nitrilotriacetic acid (0.1-1.0), $FeSO_4.7H_2O$ (0.01-0.15), $MnCl_2.4H_2O$ (0.001- 0.005), $CoCl_2.6H_2O$ (0.005-0.02), $CaCl_2.2H_20$ (0.01-0.5), $ZnCl_2$ (0.01-0.15), $CuCl_2.H_2O$ (0.01-0.03), H_3BO_3 (0.002-0.02), Na_2MoO_4 (0.001-0.02), Na_2SeO_3 (0.005-0.02), $NiSO_4$ (0.01-0.03), $SnCl_2$ (0.01-0.03).

In acidogenesis stage the hydrolysed organic waste and biomass is subjected to a microbial mixture which converts it to the VFA, where the concentration of the acetic acid is more than 70%. This reactor runs under micro-aerophilc conditions and/or anaerobic conditions with Total Solid loading of more than 50%. The gaseous effluent produced during this stage is transferred to electro-assisted methanogenesis reactor.

The microbial consortia disclosed herein for acidogenesis having ability to transform hydrolysed biomass and organic waste to VFAs. In some embodiement the microbial inoculum includes, but is not limited to, *Clostridium aceticum*; *Acetobacter woodii*, *Ruminococcus* sp., *Lactobacillus* species, *Bacillus licheniformis*, Clostridium termoautotrophicum. In an embodiment strains *Lysinibacillus sp*. (MTCC 25029), *Bacillus thermoleovorans* (MTCC 25023), *Peudomonas aerugiosa* (MTCC 5388), Pseudomonas putida MTCC 5869, *Arthrobacter sp.* (MTCC 25028) can also used for acidogenesis either alone or in combinations thereof.

In an aspect of the present invention a nutrient system is fed to the acidogenesis reactor. consisting of K_2HPO_4 (4-5g/l), KH_2PO_4 (4-15 g/l) , $MgCl_2$ (0.2-2 g/l), 0.5-10 ml trace elements, yeast extract (3-10 g/l), ammonium nitrate (5-8 g/l), thiamine (25-300 ppm), citrate (10-20 g/l), sorbitol ester (5-25ppm) , Oleic acid (100 -1000 ppm), pantothenic acid (20-500 ppm). The trace element solution (gram per liter) comprises nitrilotriacetic acid (1.0), $FeSO_4.7H_2O$ (0.01), $CoCl_2.6H_2O$ (0.09), $CaCl_2.2H_20$ (0.9), $ZnCl_2$ (0.55), $CuCl_2.H_2O$ (0.03), H_3BO_3 (0.02), Na_2MoO_4 (0.02) .

The the contents of the hydrolysis reactor and acidogenesis reactor are typically circulated at 20- 60 degree C at a rate such that the entire volume is completely re-circulated about 1-5 times in a day.

The hydrolysis and acidogenesis process can be carried out in a single reactor or in two different reactors.

The microbes with hydrolytic and acidogenesis acitivity can be obtained from organic waste damping sites, effluent plant, cattle dung slurry, wood decaying sites etc. The general characteristics, growth and cultivation protocol of acetogenic bacteria is provided in Drake, Harold L. -- Acetogenesis (Ed) Diversity, Ecology, and Isolation of Acetogenic Bacteria Schink, Bernhard. Pages 197-235) (doi 10.1007-2F978-1-4615-1777-1_7)

The acetic acid enriched VFA from acidogenesis is subjected to electro-assisted methanologenesis, after adjusting its pH, in a single chambered cell reactor containing at least one cathode and one anode which are connected to each other by a conductive wire. The cell is poised to the potential ranging from 0.1 -1V. The leachate of the organic waste from acidogenesis stage works as electrolyte and this is inoculated withmicrobes. The potential applied to the cell facilitates the conversion of VFAs to methane in faster way and the microbes present in the cells reduce the CO_2 at cathode to methane and oxidized the H_2S at anode to the SO_4. This results in increased concentration of CH_4 and reduced concentration of the CO_2 and H_2S. The biogas produced in this reactor is collected in suitable container and it contained more than 95% methane and less than 2% CO_2 and H_2S less than 2 ppm.

In an embodiment the microbial inoculum used for electro-assisted biomethanogenesis step may include but not limited to *Citrobacter* sp. MTCC 25018), *Serratia* sp. (MTCC 25017), Bacillus stearothermophilus (MTCC 25030), *Shewanella* sp. (MTCC 25020), *Pseudomonas fragi* (MTCC 25025) and methanogenic bacteria.etc. Any of various Methanogenic bacteria can be used, including, but not limited to, *Methanosarcina* sp., *Desulfovibrio* sp. *Clostridium* sp., *Methanobacterium* sp., *Brevibacterium* sp., *Methanolobus* sp., *Methanosaeta* sp., *Thermotoga* sp. *Methanobacterium bryantii; Methanobacterium formicum; Methanobrevibacter arboriphilicus; Methanobrevibacter gottschalkii; Methanobrevibacter ruminantium; Methanobrevibacter smithii; Methanocalculus sp.; Methanococcoides burtonii; Methanococcus aeolicus; Methanococcus jannaschii; Methanococcus maripaludis; Methanocorpusculum labreanum; Methanoculleus bourgensis; Methanogenium sp., Methanomicrobium mobile; Methanoregula boonei; Methanosaeta sp.; Methanosarcina sp;; Methanosphaera sp.; Methanothermobacte sp.; Methanothermobacter thermautotrophicus* and combinations of any of these and/or other methanogenic bacteria.

The methanogenic bacteria can be obtained from methane producing coal bed, a manure digestor, a municipal waste, an activated sludge from wastewater treatment,

sewer, sludge ponds, any other running old biogas plant, from cattle dung or an isolated culture of individual methanogenic bacteria from such sources. Methanogenic bacteria and conditions for their growth and maintenance are known, as exemplified in M. Dworkin et al., The Prokaryotes, Springer; 3rd edition, 2007 and in J. G. ZEIKUS The Biology of Methanogenic Bacteria, Bacteriological Reviews, June 1977, Vol. 41, No. 2 , pp. 514-541.

The electrodes in the electro-assisted biomethanogenesis reactor provide electrons for the steering of the fermentation process leading metabolic shift to produce methane and for carrying out redox reaction which result in in-situ conversion of the CO_2 and H_2S. In another aspect the present invention provides for a source of external electric current wherein such source can be renewable electric source for example electric current generated from solar power, wind turbines, hydroelectric or biomass-fired electrical generators, or other renewable energy sources of electricity. In another aspect the present invention provides exemplary conductive electrode materials that may include, but are not limited to, carbon paper, carbon cloth, carbon felt, carbon wool, carbon foam, graphite, porous graphite, graphite powder, iron, carbon nanotubes, functionalized carbon nanotubes, metals, stainless steel, and combinations of these. The physical orientation of the electrodes can be any convenient mutual orientation relative to each other. An embodiment of the present invention has the cathode and anode of equal dimensions and oriented with surfaces parallel to each other. In yet another embodiment, the electrodes particularly the cathode, are gas diffusion electrodes.

An aspect the present invention provides for the electric sources comprising of both renewable and non- renewable sources of electricity. The renewable source of the energy include but are not limited to solar energy, wind turbines, hydroelectric or biomass-fired electrical generators, or other renewable energy sources of electricity. In an embodiment, the source of electrical current can be any convenient source of electrical current, including a grid-connected power supply, a battery, a fuel-powered generator, an electrochemical cell, a microfuel cells, a bioelectrochemical cell with

anodic chamber having bio-oxidation of wastewater. In yet another embodiment, the reactor may contain carbonic anhydrase, its mimic or carbonic anhydrase producing microbes in free and/or immobilized form improving the solubility of the CO_2 in the reactor. An embodiment of the present invention provides methanogenic consortium as herein described wherein the consortia of microbes is active at a temperature of 10°C to 65°C salinity range from 0.05-10%. The microbial consortium disclosed in the present invention produces stable biogas production without seasonal variation impact. In an embodiment of the present invention, addition of some electron donor like metal (s) may be added to methanogenic reactor. The effluent from the methanogenic reactor is recycled to hydrolysis reactor to recover the residual BOD content and recycle the water.

The electro-assisted methanogenesis reactor is suplimented with a nutrient mixture consisting of $NiCl_2 . 6H_2O$, 1.5 mg/L; $FeSO_4 . H_2O$, 0.5 mg/L; $MgSO_4 . 7H_2O$, 0.8 g/L; KH_2PO_4, 0.5 g/L; K_2HPO_4, 0.5 g/L; KCl, 0.05 g/L; $CaCl_2 . 7H_2O$, 0.05 g/L; NaCl, 1.5 g/L; NH_4Cl, 1 g/L; $MnSO_4 . 7H_2O$, 0.6 mg/L; $ZnSO_4 . 7H_2O$, 0.1 mg/L; $CuSO_4 . 5H_2O$, 0.02 mg/L; H_3BO_3, 7 µg/L; $CoSO_4 . 7H_2O$, 4 µg/L; $Na_2MoO_4 . 2H_2O$, 0.5 mg/L; $Na_2SeO_3 . 5H_2O$, 3 µg/L; $Na_2WO_4 \times 2H_2O$, 4 µg/L; Nitrilotriacetic acid, 0.15 mg/L; sodium acetate, 1 g/L; trypticase, 2 g/L; yeast extract, 2 g/L; valeric acid, 5 mM; isovaleric acid, 5 mM; 2-methylbutyric acid, 5 mM; isobutyric acid, 6 mM; 2-methyl valeric acid, 5 mM; resazurin, 1 mg/L. 2% (v/v): $NaHCO_3$, 10%; Na_2S, 2%; methanol, 4 M; sodium format, 8 M.

The addition of neutral red and nano-sized iron oxide in the electro-assisted biomethanogenesis reactor in ratio of 2:1 at the final concentration ranging from 2-10 ppm further improves the gas yield.

The process disclosed in the present invention is effective in temperature 5-65 degree C, pH 4-10 and salinity 0-5% on wide range of the feedstock like biomass, kitchen waste, sewerage, municipal waste, refinery wastewater, petrochemical industry wastewater etc.

The process disclosed in the present invention can be used in batch wise, semi - continuous or continuous process of biomethanation under septic conditions.

According to the state of the art, the anaerobic degradation of organic substance takes place in an aqueous medium with contents of dry substance of normally less than 30%.In the present invention the solid loading is more than 50%.

The optimum carbon:nitrogen:phosphorus:sulfur ratio is 300:10:4:2 for hydrolysis and acidogenesis, and 500:10:5:3 methanogenesis, respectively. The optimum pH-value for hydrolysis and acidogenesis is in the range of pH 4.2 to 6.3, the optimum pH-value for methanogenesis is in the range of pH 6.7 to 8.5.

In an embodiment, trace elements containing manganese and/or copper and/or tungsten and/or zinc and/or nickel may be added at various stages of the process at different concentration.

In another aspect of the present invention the electron efficiency of the methanogenesis stage is more than 97%.

In another aspect of the present invention the methane production ability of the present process is more than 99% of theoretical yield based on the COD/BOD content of the feed.

Having described the basic aspects of the present invention, the following non-limiting examples illustrate specific embodiment thereof.

Example 1

The organic waste (kitchen waste) (5 Kg) was pulverized and subjected to hydrolysis using the microbial blend consisting of *Bacillus* sp. and *Lactobacillus* sp. at pH 7 and

temperature 65°C with stirring at 10 rpm for 5 hrs. The hydrolysed material was transferred to acidogenesis reactor using microbial blend consisting of *Clostridium* sp. and *Acetobacter* for 12 hrs under microaerophilic conditions it produces the VFA (2 g/L) with around 1.5 g/L acetic acid. The acetic acid was continually fed to the methenogenesis reactor with HRT of 6h.

The electro-assisted methanogenesis reactor (10L) was having the graphite stick cathode and anode (both 10 × 30 cm) were suspended in the reactor which are connected to each other by a conductive wire. Electrodes were separated to avoid short circuit. Voltage was applied to circuit through the electric source and cell poised at -700 mV. The gaseous effluent from all reactors was continuously sparged at 20ml/min rate toreactor. This assembly was kept under stirring at temperature 55°C. It was inculcated by microbial consortium consisting of *Shewanella* sp. IOC-EA-106 (MTCC 25020), *Pseudomonas fragi* IOC-S2 (MTCC 25025), and microbial innoculum obtained from any operational biogas plant, comprising of bacteria such as *Methanosarcina* sp, *Desulfovibrio* sp., *Clostridium* sp., *Methanobacterium* sp., *Brevibacterium* sp. etc. A control reactor without electric current was also run parallel.

The result showed methane content of 97% and CO_2 content of 2% in the biogas produced with no detectable H_2S.The control reactor contained 54% CH_4, 100 ppm H_2S and 45% CO_2.

Whereas the principal inventive concept has been described in this provisional patent application, the invention will be fully and particularly described in the complete patent application pursuant hereto.

Dated this 26th day of July, 2016

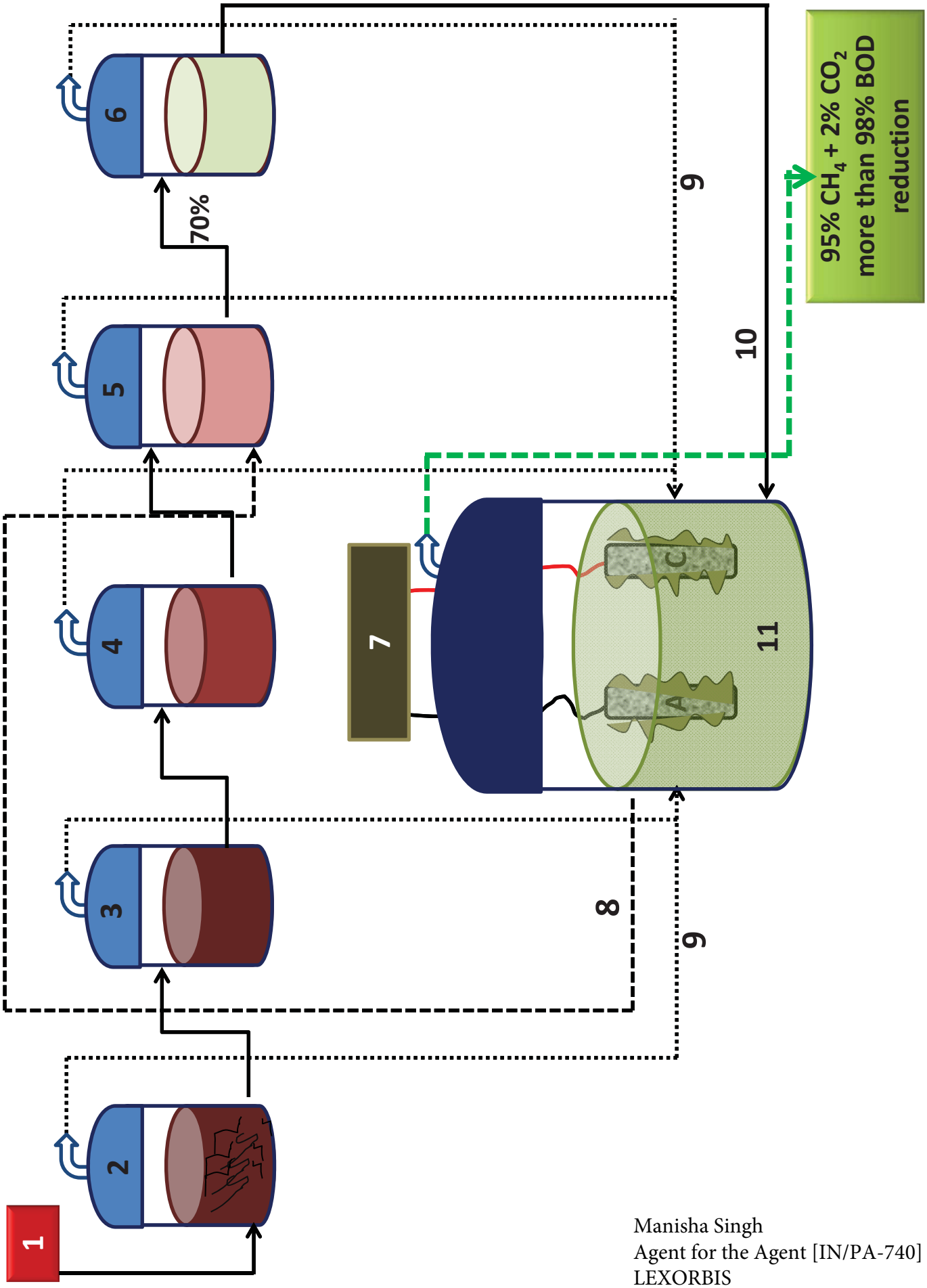

Manisha Singh
Agent for the Agent [IN/PA-740]
LEXORBIS

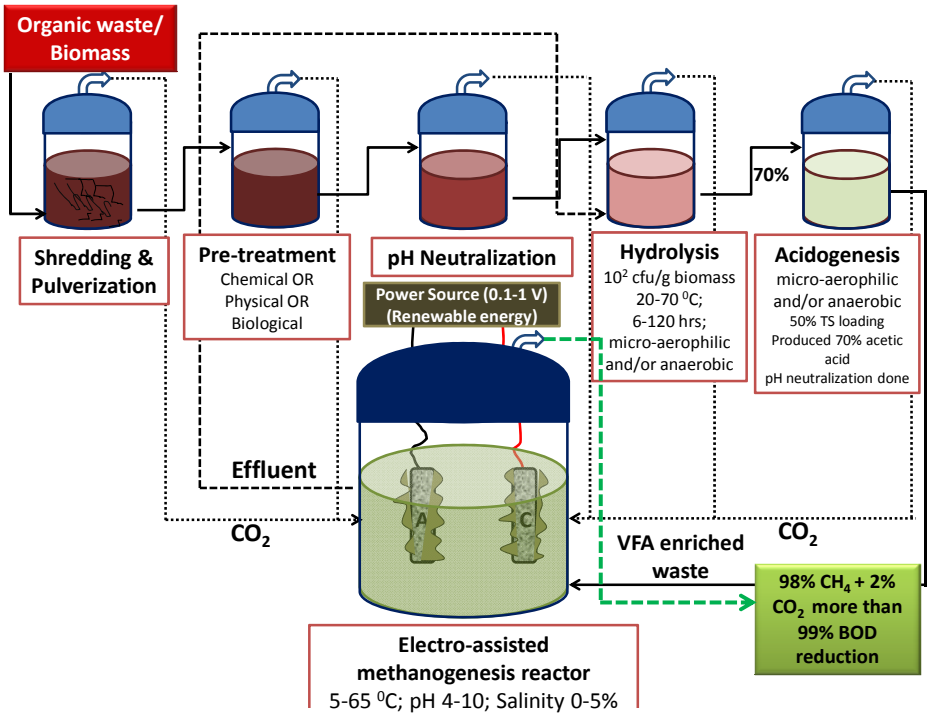

Figure-1: Schematic diagram showing various steps of present invention