Dec. 20, 1955 S. C. NELSON 2,727,275

EXTRUSION ORIFICE END BLOCK

Filed Feb. 8, 1952

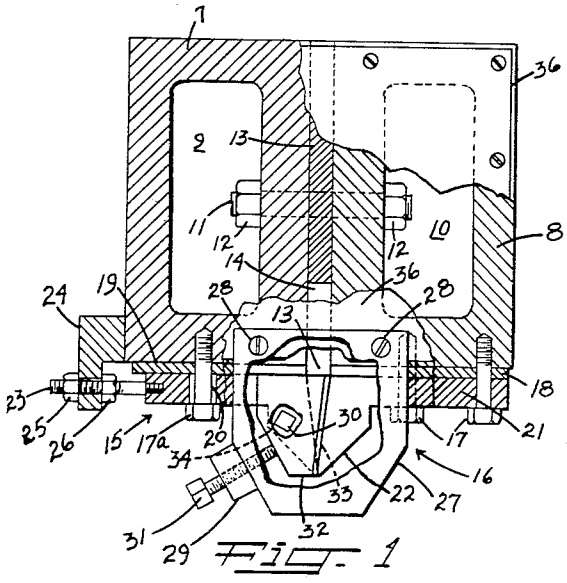


Fig. 1

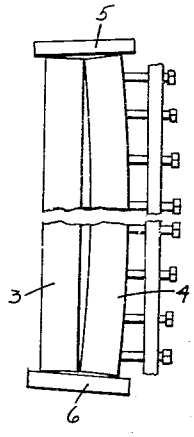


Fig. 3

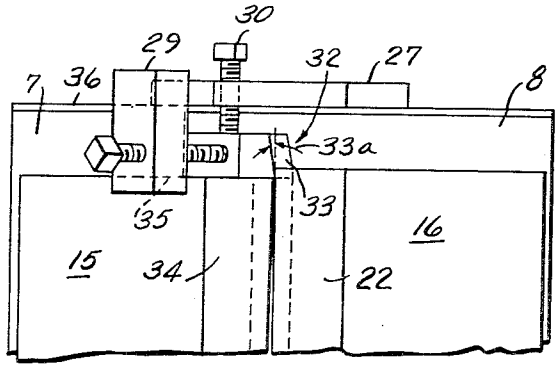


Fig. 2

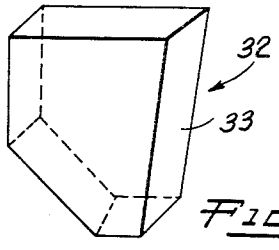


Fig. 4

INVENTOR.
SEDDON C. NELSON
BY
Thomas P. O'Malley
ATTORNEY.

United States Patent Office 2,727,275 Patented Dec. 20, 1955



2,727,275

# EXTRUSION ORIFICE END BLOCK

Seddon C. Nelson, Fredericksburg, Va., assignor to American Viscose Corporation, Philadelphia, Pa., a corporation of Delaware

Application February 8, 1952, Serial No. 270,554

5 Claims. (Cl. 18—12)

This invention relates to apparatus for producing non-fibrous foils, pellicles, films, sheets and like products from film-forming compositions. More specifically it relates to film extrusion apparatus which includes improved means for determining the ultimate width of the extruded film, foil or like product.

The manufacture of films, foils and like products is commonly carried out by extruding a suitable substance such as viscose through an elongated orifice into a coagulating or regenerating bath. Ordinarily the orifice is formed by the space between two elongated adjustable metal plates called "lips" or "lip members" which are positioned at the bottom of the extrusion apparatus and which during the film forming operation remain submerged in the coagulating or regenerating liquid. Each extremity of the elongated orifice is ordinarily defined by an end block which engages the ends of the opposed adjustable lip members and determines the ultimate width of the extruded film. In the past, considerable difficulty has been experienced in minimizing the seepage of spinning solution between the end blocks and the extremities of the opposed lip members, especially when the lip members are adjusted and dimensions of the orifice are varied.

It is a principal object of the present invention to provide an improved type of extrusion orifice end block construction which minimizes undesirable spinning solution seepage between the end blocks and the adjacent extremities of the orifice defining lip members.

Other objects and advantages of the invention will be apparent from the following description of the drawing wherein

Figure 1 is a partly sectioned end view of a preferred embodiment of the present invention which has been broken away to show the construction more clearly;

Figure 2 is an enlarged bottom view of the extrusion apparatus shown in Figure 1;

Figure 3 is a bottom view of a form of extrusion apparatus which has been employed in the past wherein the extremities of the opposed lip members are bowed in an exaggerated manner to more clearly illustrate the inappropriate end block structure thereof; and

Figure 4 is a perspective of the end block shown in Figures 1 and 2.

It has been found that as the spinning solution is extruded from the elongated orifice into the coagulating or regenerating bath enlarged portions or beads are formed along the edges of the film by the surface tension of the extruded solution. The usual manner in which these undesirable beaded edge portions are eliminated and the regularity and uniformity of the extruded film is improved is illustrated in Figure 3 wherein the adjustable lip members **3** and **4** are bowed so as to allow a smaller quantity of spinning solution to pass through the orifice adjacent its extremities than along the central portion thereof. It is to be noted, however, that when the lip members are bowed various amounts in this manner, the end plates **5** and **6** fail to properly contact the end surfaces of the lip members and the spinning solution is more apt to seep beyond the definition of the desired orifice. In general, the improved structure of the present invention provides tighter contact between the end blocks and the lip members in their various adjusted positions and thereby reduces the above mentioned undesirable seepage.



Referring now more particularly to Figures 1 and 2 of the drawing, reference characters **7** and **8** disclose a pair of elongated main castings which are cored to provide chambers **9** and **10** through which may flow a spinning solution temperature regulating medium such as water, steam, or air. The elongated castings **7** and **8** are placed side by side and secured one to the other by the studs **11** and their complementary nuts **12**. End plates **36** which are shown partly cut away extend across the open end of the cored castings and define the extremities of the elongated chambers **9** and **10**. An elongated spacer shim **13** which is located between the upper portions of the castings **7** and **8** separates the lower portions thereof and thereby provides the elongated spinning solution accommodating opening **14**. Thus, the supply of spinning solution may be delivered from a source not shown on the drawing to a central portion of the spinning head assembly and then downwardly through the elongated opening **14**.

Carried on the underside of the main castings **7** and **8** are the orifice defining lip members **15** and **16** which determine the ultimate width of the extrusion orifice. Each of the lip members includes in cross-section a mounting portion **21** and an orifice defining angular portion **22** which extends downwardly therefrom. The mounting portion of lip member **16** is securely fastened to the lower surface of the main casting **8** by a plurality of cap screws **17** which extend upwardly through the lip member and its associated bearing plate **18** and threadedly engage the underside of the casting **8**. The mounting portion of lip member **15** is likewise fastened to the lower surface of its respective casting **7** by a plurality of cap screws **17***a* which extend upwardly through the bearing plate **19** and threadedly engage the underside of its casting **7**. The slots **20** permit a longitudinal sliding movement of the lip member **15** on the cap screws **17***a* and therefore provide a sliding adjustment of the width of the extrusion orifice. This sliding adjustment is controlled by means of the adjusting screws **23** which threadedly engage the end of the mounting portion **21** of the lip member **15** and extend outwardly therefrom. The adjustment bar member **24** extends outwardly and downwardly from the lower portion of the main casting **7**, guides the adjusting screw **23** and cooperates with the adjustable nuts **25** and **26** to control the position of the lip member on cap screws **17***a*.

Each end block supporting plate **27** is secured to the ends of the main castings by means of cap screws **28** and extends downwardly therefrom. Plate **29** may be welded as shown on the drawing or secured in any other convenient manner to a lower portion of the supporting plate and extends inwardly beneath and beyond the extremities of the opposed lip members. Threaded clamping screws **30** and **31** extend through the supporting plate **27** and the plate **29** respectively and floatingly press each end block **32** against the ends of one of the lip members and against a lateral face of the other lip member as is hereinafter more fully described.

Although the present invention may be practiced by extending either of the lip members beyond the other, the fixed lip member **16** is as shown on the drawing preferably constructed longer than the movable lip member **15**. Each of the end blocks includes a front and rear surface and preferably five edges as shown in the drawing. The clamping screws **30** engage the front surface of the end block and may be adjusted such that its

rear surface firmly contacts the end surface of the movable lip member. Preferably the rear surface of each end block is ground as at **35** in Figure 2 of the drawing so that it provides complete contact at all times with the end surface of the movable lip member which is also ground. The edge **33** of the end block is preferably ground with a small clearance angle as shown at **33***a* in the drawing to thereby insure engagement with the inside surface of the extended portion of the fixed lip member regardless of its angular relationship with the movable lip member. An opposite edge 34 of the end block is adapted to extend generally parallel to the surface of the subplate **29** and thus may be conveniently contacted by the holding screw **31** which extends therethrough. A small gasket or the like though not shown on the drawing may, if desired, be placed between the upper edge of the end block **32** and the bearing plate **19** to improve the seal therebetween. In this way the block is firmly held against the extended portion of the fixed lip member and the bearing plates **18** and **19**. Thus it is to be noted that in the improved end plate construction of the present invention the full surface of one face of the end block engages the end surface of the adjustable lip member at all times and that another appropriately ground surface of the end block tends to engage the extended inner edge surface of the stationary lip member in a like fashion even as the angular disposition of the orifice defining lip members is varied.

The improved end block construction of the present invention has been found particularly advantageous since it provides an exceptionally tight joint even when the extremities of the movable blade have been flexed a relatively large amount. Thus, with such a construction one factor in the formation of beaded edges on the extruded sheet or film may be conveniently overcome without affecting the ultimate width of the sheet.

It is to be further pointed out that relative longitudinal movement of the lip members does not harmfully effect the joint or seal provided by the improved end block construction of the present invention. Thus, although the stationary lip member is fixed with respect to its associated main casting of the spinning apparatus, the movable lip member which is relatively loosely mounted on its main casting may thermally expand and contract without affecting the manner in which the end block tightly engages the ends of the adjacent lip members.

While preferred embodiments of the invention have been disclosed, the description is intended to be illustrative only and it is to be understood that changes and variations may be made without departing from the spirit and scope of the invention as defined by the appended claims.

I claim:

1. Film extrusion apparatus comprising a pair of opposed orifice defining lip members, one of the lip members extending beyond an extremity of the other lip member, and an end block member floatably pressed against the extended portion of the orifice defining surface of the one lip member and the extremity of the other lip member.

2. Film extrusion apparatus for defining the dimensions of an orifice comprising a stationary orifice defining lip member; a movable orifice defining lip member, one



of the lip members extending beyond the extremity of the other lip member; and a pair of end block members, one surface of each of the end block members pressed against the extended portion of the orifice defining surface of the one lip member and another surface of each of the end block members pressed against the end surface of the extremity of the other lip member.

3. Film extrusion apparatus comprising a body member having an elonagted spinning solution discharge opening therein, a movable orifice defining lip member which is slidably secured to the body member on one side of the opening, an opposed stationary orifice defining lip member which is secured to the body member on the other side of the opening and which extends beyond the extremities of the movable lip member, means for slidably adjusting the position of the movable lip member, and means for defining the end extremities of the orifice comprising an end block, having one surface which engages the extended portion of the orifice defining surface of the fixed lip member and another surface which engages the end surface of the extremity of the movable lip member.

4. Film extrusion apparatus comprising a body member having an elongated spinning solution discharge opening therein; a movable orifice defining lip member which is slidably secured to the body member on one side of the opening; an opposed stationary orifice defining lip member which is secured to the body member on the other side of the opening and which extends beyond the extremities of the movable lip member; means for slidably adjusting the position of the movable lip member; and means for defining the end extremities of the orifice comprising an end block, having one surface which engages the extended portion of the orifice defining surface of the fixed member, another surface which engages the end surface of the extremity of the movable lip member and another surface which engages a lower surface of the body member; and clamping means which are connected to the body member and arranged to urge the end blocks against the extended orifice defining surface of the stationary lip member, the extremity of the movable lip members and the body member.

5. Film extrusion apparatus comprising a body member having an elongated spinning solution discharge opening therein, a movable orifice defining lip member slidably secured to said body member to form one side of the opening, an opposed stationary orifice defining lip member secured to the body member to define the other side of the opening, said stationary lip member extending beyond the extremities of the movable lip member, means for slidably adjusting the movable lip member, a bracket secured to the body member at each end thereof, an end block floatably supported in each bracket, and means in the brackets for pressing each end block against the respective extremities of the movable lip member and the face of the stationary lip member to form an end seal for the opening in any moved position of the movable lip member.

**References Cited** in the file of this patent

UNITED STATES PATENTS

2,308,034 Van Derhoef ---------- Jan. 12, 1943