(19) Europäisches Patentamt
European Patent Office
Office européen des brevets

(11) EP 0 704 101 B1

(12) **EUROPEAN PATENT SPECIFICATION**

(45) Date of publication and mention of the grant of the patent:
08.09.1999 Bulletin 1999/36

(21) Application number: **95914456.9**

(22) Date of filing: **06.04.1995**

(51) Int Cl.[6]: **H01J 5/60**, H01J 65/04

(86) International application number:
PCT/GB95/00797

(87) International publication number:
WO 95/27995 (19.10.1995 Gazette 1995/45)

(54) ELECTRODELESS DISCHARGE LAMP

ELEKTRODENLOSE ENTLADUNGSLAMPE

LAMPE A DECHARGE SANS ELECTRODE

(84) Designated Contracting States:
DE FR GB IT NL

(30) Priority: **11.04.1994 GB 9407132**

(43) Date of publication of application:
03.04.1996 Bulletin 1996/14

(73) Proprietor: **GE LIGHTING LIMITED**
Enfield, Middlesex EN1 1SB (GB)

(72) Inventors:
- **GOULD, Allan**
  deceased (GB)
- **DOWNTON, Kenneth**
  Leicester Leicestershire LE2 0JF (GB)

(74) Representative: **Szary, Anne Catherine, Dr. et al**
London Patent Operation,
GE International, Inc.,
Essex House,
12-13 Essex Street
London WC2R 3AA (GB)

(56) References cited:
EP-A- 0 244 025
FR-A- 695 561
US-A- 2 157 051

Note: Within nine months from the publication of the mention of the grant of the European patent, any person may give notice to the European Patent Office of opposition to the European patent granted. Notice of opposition shall be filed in a written reasoned statement. It shall not be deemed to have been filed until the opposition fee has been paid. (Art. 99(1) European Patent Convention).

EP 0 704 101 B1

Description

[0001] The present invention relates to an electrodeless discharge lamp to the base portion of such lamp and more particularly, to such a mounting arrangement as provides for a complete mechanical failure in the event of damage to the lamp as can occur for instance by mishandling.

[0002] Electrodeless discharge lamps are expected to become increasingly popular for home, industrial and commercial uses because of the obvious advantages of energy efficiency and long life over the standard incandescent and even other compact fluorescent products which are electroded. In an electrodeless discharge lamp, an ionizable medium is excited to a discharge state by introduction of a radio frequency (RF) signal and light is produced from such discharge by use of a suitable phosphor. An example of such a lamp can be found in US Patent No. 4,010,400 wherein it is disclosed that an electric field generated by the RF signal initiates the ionization that produces visible light output whereas a magnetic field then sustains ionization for continuous lamp operation. The lamp envelope in this instance is shown in the shape of a typical A-line incandescent lamp having a central cavity through which a coil member is disposed, such coil member being effective for coupling the RF signal to the ionizable medium. The lamp envelope is then shown being mounted on a base member in which a ballast circuit effective for generating the RF signal is disposed. Though no discussion is provided in this patent for the actual manner by which the lamp is mounted to the lamp base, it is known that some form of adhesive could be used to both secure the envelope to the base and to provide a seal therebetween. The problem with such a mounting arrangement particularly with a potentially long lasting lamp such as the electrodeless discharge lamp is that the adhesive has a potential for degradation at a joint where safety is a critical factor. Moreover, for other safety reasons, it is important to insure that the lamp envelope will definitely be rendered inoperative before it can be separated from the lamp base, such feature is not guaranteed for a lamp which utilizes an adhesive mounting arrangement.

[0003] Accordingly, it would be advantageous if a mounting arrangement for mounting a lamp envelope to a lamp base could be provided for use with an electrodeless discharge lamp wherein such mounting arrangement would not be subject to degradation- over time and would insure that upon damage to the lamp as may occur by mishandling for instance, the lamp is definitely disabled before it could be separated from the lamp base.

[0004] This problem is solved in US-A-2157051 with a mounting member provided with two sets of arms, each engaging respectively the envelope and the base.

[0005] FR-A-695561 discloses a mounting arrangement according to the preamble of Claim 1 wherein a mounting member has a centre support portion and a plurality of axially extending arms, wherein the end portions of said arms contact the inner surface of the lamp base and wherein dimple portions of said arms contact an indentation portion formed at the end of the lamp envelope which extends into said lamp base thereby securing said lamp envelope to said mounting member which in turn is secured to said lamp base by a threaded portion of said mounting member.

[0006] Based on the principles of the present invention, there is provided an electrodeless discharge lamp comprising a lamp envelope, a lamp base and a mounting member interposed between the lamp envelope and the lamp base to fix them to each other, wherein the mounting member has a centre support portion and a plurality of arms contacting an indentation portion formed at the end of the lamp envelope which extends into the lamp base thereby securing the lamp envelope to the mounting member, characterised by said plurality of arms extending outwardly from said centre support portion and each having an end portion contacting a ridge formed on an inner surface of the lamp base thereby securing the mounting member to the lamp base and a second, curved, portion contacting said indentation portion and thereby securing the lamp envelope to the mounting member.

[0007] An embodiment of the invention will now be described, by way of example, with reference to the accompanying drawings, in which:-

[0008] Figure 1 is a sectional view of an electrodeless discharge lamp constructed in accordance with the teachings of the prior art.

[0009] Figure 2 is an elevational view in section of a lamp envelope and lamp base configuration for an electrodeless discharge lamp constructed in accordance with the principles of the present invention.

[0010] Figure 3 is an elevational view of a bulb clip device used in conjunction with the lamp envelope and lamp base configuration shown in Fig. 2.

[0011] With reference to Fig. 1, it can be seen that an electrodeless fluorescent lamp 10 includes a lamp base portion 12 and a lamp envelope portion 14. When finally assembled, the lamp 10 can resemble a conventional A-line incandescent lamp, or it can be shaped as a reflector lamp as shown in Figure 1. The base portion 12 is constructed having a conventional Edison type threaded base 13 capable of easy installation in a conventional light socket typically used in conjunction with a standard incandescent lamp.

[0012] A housing portion 22 is formed adjacent the threaded base 12a and serves to contain the ballast circuit 24 which receives the line power and converts such line power into an operating signal capable of driving the electrodeless lamp 10 to a discharge state. A core member 20 which extends from the housing portion 22 is made of a magnetizable material and has wound thereon, an excitation coil 18. The excitation coil 18 is effective in conjunction with a capacitor (not shown) disposed within the housing portion 22, for forming a resonant cir-

cuit which receives the operating signal from the ballast circuit 24 and develops the RF signal therefrom. The RF signal is then inductively coupled to a gas fill contained within the lamp envelope 14 so as to initiate and maintain the gas discharge 23 within the lamp envelope 14. The inner surface of the lamp envelope 14 is coated with appropriate fluorescent materials shown generally as reference 21, such fluorescent materials being selected from a group of known materials and applied to the inner surface in a known manner. With the RF energy coupled to the gas fill as previously described, the molecules which make up the gas fill are ionized first by an electric field generated by the RF signal and thereafter maintained in such discharge state by a magnetic field also produced by the RF signal. The resulting gas discharge is then used to produce visible light by the known principles of fluorescent lighting.

[0013] In setting forth the principles of operation for an electrodeless fluorescent lamp 10, the prior electrodeless fluorescent lamps as shown in U.S. 4,010,400 provide no direction regarding the manufacture of such a lamp nor specific teachings regarding certain safety features of the lamp. For instance, as seen in Fig. 1 or U.S. 4,010,400, the manner of attaching the lamp envelope to the lamp base merely shows a lower tapered portion of the lamp envelope 14 fitting into a lip region associated with the lamp base. One skilled in the art of lamp manufacture would most likely use an adhesive arrangement for securing purposes. The disadvantage with such an adhesive arrangement however is that because of the expected long life of an electrodeless discharge lamp 10, the adhesive used may deteriorate before the end of the life of the lamp 10. In order to address this problem, the present invention provides an arrangement which mechanically secures the lamp envelope 14 to the lamp base 12 so as to provide an expected life at least as long as the lamp 10. In addition, the present invention also provides an added safety feature in that, should the lamp envelope 14 be subjected to excessive forces by mishandling for instance, the lamp securing arrangement as will be described with reference to Fig. 2, will operate to disable operation of the lamp 10.

[0014] As further seen in Fig. 1, the electrodeless fluorescent lamp; 10 of the present invention further includes a re-entrant cavity portion 15 of the lamp envelope 14. The core member 20 extends into the re-entrant cavity 15. An exhaust tube 16 extends through the center of the re-entrant cavity 15.

[0015] As seen in Fig. 2, an electrodeless fluorescent lamp 10 constructed in accordance with the present invention incorporates the safety feature which provides for the lamp shutdown in the event of an excessive force being exerted on the lamp envelope and further, which addresses the above discussed life expectancy problem related to the envelope, base securing arrangement. Electrodeless fluorescent lamp 10 provides that the lamp base member 12 and a lamp envelope 14 which are cooperatively interlocked by means of a bulb clip member 36 as will be more fully described with reference to Figs. 3 through 6.

[0016] With the ballast circuit components disposed within the lower portion of the base member 12, the bulb clip member 36 will reside within the top portion of the lamp base 12 as depicted in Fig. 2. At the upper end of the bulb clip member 36, a plurality of arm ends 44a (see Fig. 3) contact a lip portion 12a formed along the upper inner rim of the lamp base member 12. In this manner, the bulb clip member 36 is prevented from being pulled away from the lamp base 12 and, as will be described hereinafter in further detail, further prevents the pulling out of-the lamp envelope 14 from the lamp base 12. Though the lip portion 12a prevents movement of the bulb clip member 36 and the lamp envelope 14 out of the lamp base 12, it can be appreciated that such lip portion 12a may not prevent the bulb clip member 36 from dislocating to a position further within the lamp base member 12. As a means of support for preventing the bulb clip member 36 from dislocating to a position within the lamp base 12, it is possible to provide a lower stop member 38 disposed on the inner surface of the lamp base 12 at a point just below the bottom portion of the bulb clip member 36. Of course, once the lamp envelope 14 is fitted within the bulb clip member 36, it is also possible to rely on the support of the lamp envelope 14 contacting the topmost portion of the lamp base 12 in order to prevent the bulb clip member 36 from falling to a lower position within the lamp base 12. It is also possible to provide a sealing ring (not shown) around the point at which the topmost portion of the lamp base 12 contacts the lamp envelope 14; this sealing ring could cushion this junction point as well as provide a barrier for preventing dirt, moisture or other materials from entering the lamp base member 12.

[0017] As further seen in Fig. 2, the bulb clip member 36 has a central opening 40 through which the exhaust tube extends into the re-entrant cavity 15 of the lamp envelope 14. Additionally, the bulb clip member 36 includes a plurality of curved portions 42 which are effective for retaining a flared end portion 14a of the lamp envelope 14. The flared end region 14a of the lamp envelope 14 can be formed in a continuous annular manner or, in the alternative, can include at least one stop portion (not shown) formed along the surface of the lamp envelope 14. This stop portion can be effective for engaging a side portion of one of the arm extensions 44a of the bulb clip member 36 thus preventing the rotation of the lamp envelope 14 relative to the bulb clip member 36 or the lamp base 12.

[0018] As hereinabove discussed, the securing arrangement between the lamp envelope 14 and the lamp base 12 is one that, should an excessive force be exerted on the lamp envelope 14, a lamp shutdown will occur. This lamp shutdown is affected by use of the bulb clip member 36 which can be constructed of a metal having a spring coefficient that allows for the flexing of the extension arms 44 as shown in Fig. 3. The bulb clip

member 36 can also be constructed of a high temperature, nonconducting plastic material. Referring again to Fig. 2 and the manner by which the bulb clip member 36 contacts the lip portion 12a of the lamp base, it can be seen that any excessive pulling force exerted on the lamp envelope 14 will result in the flared end portion 14a of the lamp envelope 14 transferring such force to the region of the curved portions 42 of the bulb clip member 36. Since the bulb clip member 36 is constructed of a resilient material, such force on the curved portion 42 will be translated in a direction away from the longitudinal axis of the electrodeless lamp 10 to exert a further force between the plurality of arm ends 44a to the lip portion 12a of the lamp base member 12. Should this force be increased above a threshold level, the result will be a breakage of the lamp envelope 14 at the point where the flared end portion 14a contacts the curved portions 42 of the bulb clip member 36. In this manner, the lamp 10 is effectively shut down by the fact that a no discharge condition will alter the loading on the ballast 24 thereby causing the circuit to shut down. Additionally, with the provision of at least one stop portion on the surface of the lamp envelope 14 at the flared end region 14a, if an excessive rotational force is exerted on the lamp envelope, the stop portion will contact the side of the extension arm 44a of the bulb dip member 36 such that a breakage will occur thus effectively shutting down the electrodeless lamp 10 under these conditions as well.

[0019] The bulb clip member 36 described in the lamp structure of Fig. 2, is more clearly illustrated in Fig. 3 where it can be seen that a plurality of extension arms 44a extend from a central hub portion 46 having the opening 40 formed centrally therein. As illustrated in Fig. 3, there are four extension arms 44a extending from the central hub 46 spaced equally about the circumference of the central hub 46 so that the force needed to retain the lamp envelope 14 in the lamp base 12 is equally distributed. It should be understood that the benefits of the present invention could be equally well enjoyed by the provision of a different number of extension arms as that illustrated in this figure and that any variation of such number of arms is within the scope of the present invention. The curved portions 42 formed on the extension arms 44a are sized to correspond closely to the flared end portion 14a groove of lamp envelope 14. There is another bend portion formed in each extension arm, such bend 48 being effective for achieving the force transfer feature previously discussed.

Claims

1. An electrodeless discharge lamp (10) comprising a lamp envelope (14), a lamp base (12) and a mounting member (36) interposed between the lamp envelope and the lamp base to fix them to each other, wherein the mounting member has a centre support portion (46) and a plurality of arms (44) contacting an indentation portion (14a) formed at the end of the lamp envelope which extends into the lamp base thereby securing the lamp envelope to the mounting member, characterised by said plurality of arms extending outwardly from said centre support portion and each having an end portion (44a) contacting a ridge (12a) formed on an inner surface of the lamp base thereby securing the mounting member to the lamp base and a second, curved, portion (42) contacting said indentation portion and thereby securing the lamp envelope to the mounting member.

2. An electrodeless discharge lamp as set forth in claim 1 wherein said arm end portion (44a) and said curved portion (42) of each of said plurality of arms extend in opposite directions so that when a pulling force is exerted on said lamp envelope, said arm end portions exert a greater force on said ridge (12a) formed in said lamp base and thereby cause said curved portions of said plurality of arms to exert a greater contacting force on said indentation (14a) formed in said lamp envelope.

3. An electrodeless discharge lamp as set forth in claim 1 or claim 2 wherein said mounting member (36) has a center opening (40) formed therein through which an exhaust tube for said lamp extends.

4. An electrodeless discharge lamp as set forth in any one of claims 1 to 3 wherein at least one extrusion portion is formed in said indentation portion (14a) of said lamp envelope so as to contact side portions of a pair of said plurality of arms thereby preventing rotational movement of said lamp envelope relative to said mounting member.

5. An electrodeless discharge lamp as set forth in any one of claims 1 to 4 wherein an extension is formed in the region of said ridge (12a) formed on said inner surface of said lamp base, said extension contacting an end portion of at least one of said plurality of arms and being effective so as to prevent rotational movement of said mounting member relative to said lamp base.

6. An electrodeless discharge lamp as set forth in any one of claims 1 to 5 wherein said plurality of arms are spaced substantially equidistant around the circumference of said center support portion.

7. An electrodeless discharge lamp as set forth in claim 1 wherein an outer lip portion is formed on said lamp base in an extending manner above said ridge (12a) on which said mounting member is secured, said outer lip portion having a sealing mem-

ber disposed thereon such that said lamp envelope contacts said sealing member when said lamp envelope has been mounted onto said lamp base.

Patentansprüche

1. Elektrodenlose Entladungslampe (10) mit einem Lampenkolben (14), einem Lampensockel (12) und einem Befestigungsteil (36), das zwischen dem Lampenkolben und dem Lampensockel angeordnet ist, um sie aneinander zu befestigen, wobei das Befestigungsteil einen zentralen Stützabschnitt (46) und mehrere Arme (44) aufweist, die mit einem Einbuchtungsabschnitt (14a) in Kontakt sind, der an dem Ende von dem Lampenkolben ausgebildet ist, das sich in den Lampensockel erstreckt, wodurch der Lampenkolben an dem Befestigungsteil befestigt wird, dadurch gekennzeichnet, daß sich die mehreren Arme von dem zentralen Stützabschnitt nach außen erstrecken und jeweils einen Endabschnitt (44a), der mit einem Wulst (12a), der auf einer inneren Oberfläche des Lampensockels ausgebildet ist, in Kontakt ist, um dadurch das Befestigungsteil an dem Lampensockel zu befestigen, und einen zweiten gekrümmten Abschnitt (42) hat, der mit dem Einbuchtungsabschnitt in Kontakt ist und dadurch den Lampenkolben an dem Befestigungsteil befestigt.

2. Elektrodenlose Entladungslampe nach Anspruch 1, wobei der Armendabschnitt (44a) und der gekrümmte Abschnitt (42) von jedem der mehreren Arme sich in entgegengesetzte Richtungen erstrekken, so daß, wenn eine Zugkraft auf den Lampenkolben ausgeübt ist, die Armendabschnitte eine größere Kraft auf den in dem Lampensockel ausgebildeten Wulst (12a) ausüben und dadurch bewirken, daß die gekrümmten Abschnitte von den mehreren Armen eine größere Kontaktkraft auf die in dem Lampenkolben ausgebildete Einbuchtung (14a) ausüben.

3. Elektrodenlose Entladungslampe nach Anspruch 1 oder 2, wobei das Befestigungsteil (36) eine darin ausgebildete Mittelöffnung (40) aufweist, durch die ein Absaugrohr für die Lampe hindurchführt.

4. Elektrodenlose Entladungslampe nach einem der Ansprüche 1 bis 3, wobei wenigstens ein Extrusionsabschnitt in dem Einbuchtungsabschnitt (14a) von dem Lampenkolben ausgebildet ist, um so mit Seitenabschnitten von zwei der mehreren Arme in Kontakt zu kommen, um dadurch eine Drehbewegung des Lampenkolbens relativ zu dem Befestigungsteil zu verhindern.

5. Elektrodenlose Entladungslampe nach einem der Ansprüche 1 bis 4, wobei eine Verlängerung in dem Bereich des Wulstes (12a) ausgebildet ist, der auf der inneren Oberfläche von dem Lampensockel gebildet ist, wobei die Verlängerung mit einem Endabschnitt von wenigstens einem der mehreren Arme in Kontakt ist und so wirksam ist, um eine Drehbewegung des Befestigungsteils relativ zu dem Lampensockel zu verhindern.

6. Elektrodenlose Entladungslampe nach einem der Ansprüche 1 bis 5, wobei die mehreren Arme im wesentlichen in gleichen Abständen um den Umfang des zentralen Stützabschnittes herum angeordnet sind.

7. Elektrodenlose Entladungslampe nach Anspruch 1, wobei ein äußerer Lippenabschnitt auf dem Lampensockel in einer verlängernden Art und Weise oberhalb des Wulstes (12a) ausgebildet ist, auf dem das Befestigungsteil befestigt ist, wobei der äußere Lippenabschnitt ein darauf angeordnetes Dichtungsteil aufweist, so daß der Lampenkolben mit dem Dichtungsteil in Kontakt ist, wenn der Lampenkolben auf dem Lampensockel angebracht ist.

Revendications

1. Lampe (10) à décharge sans électrode comportant une ampoule (14), un culot (12) et un élément de montage (36) interposé entre l'ampoule et le culot pour les fixer l'un à l'autre, dans laquelle l'élément de montage a une partie de support centrale (46) et une pluralité de bras (44) en contact avec une partie de renfoncement (14a) formée à l'extrémité de l'ampoule qui s'étend dans le culot fixant ainsi l'ampoule à l'élément de montage, caractérisée en ce que ladite pluralité de bras s'étend vers l'extérieur à partir de ladite partie de support centrale et que chacun a une partie d'extrémité (44a) en contact avec une nervure (12a) formée sur une surface intérieure du culot, fixant aisi l'élément de montage au culot et une deuxième partie, courbe, (42) en contact avec ladite partie de renfoncement et fixant ainsi l'ampoule à l'élément de montage.

2. Lampe à décharge sans électrode selon la revendication 1, dans laquelle ladite partie (44a) d'extrémité de bras et la partie courbe (42) de chacun de ladite pluralité de bras s'étendent dans des sens opposés de sorte que, lorsqu'une force de traction est exercée sur ladite ampoule, lesdites parties d'extrémité de bras exercent une plus grande force sur ladite nervure (12a) formée dans ledit culot et amènent ainsi lesdites parties courbes de ladite pluralité de bras à exercer une plus grande force de contact sur ledit renfoncement (14a) formé dans ladite ampoule.

3. Lampe à décharge sans électrode selon la revendication 1 ou 2, dans laquelle ledit élément de montage (36) comporte une ouverture centrale (40) formée dans celui-ci par laquelle s'étend un queusot pour ladite lampe.

4. Lampe à décharge sans électrode selon l'une des revendications 1 à 3, dans laquelle au moins une partie d'extrusion est formée dans ladite partie de renfoncement (14a) de ladite ampoule de manière à être en contact avec des parties latérales d'une paire de ladite pluralité de bras, empêchant ainsi un mouvement de rotation de ladite ampoule par rapport audit élément de montage.

5. Lampe à décharge sans électrode selon l'une des revendications 1 à 4, dans laquelle une extension est formée dans la région de ladite nervure (12a) formée sur ladite surface intérieure dudit culot, ladite extension étant en contact avec une partie d'extrémité d'au moins un de ladite pluralité de bras et ayant pour effet d'empêcher un mouvement de rotation dudit élément de montage par rapport audit culot.

6. Lampe à décharge sans électrode selon l'une des revendications 1 à 5, dans laquelle une pluralité de bras sont espacés et sensiblement équidistants autour de la circonférence de ladite partie de support centrale.

7. Lampe à décharge sans électrode selon la revendication 1, dans laquelle une partie de lèvre extérieure est formée sur ledit culot en s'étendant audessus de ladite nervure (12a) sur laquelle ledit élément de montage est fixé, un élément d'étanchéité étant disposé sur ladite partie de lèvre extérieure de telle manière que ladite ampoule soit en contact avec ledit élément d'étanchéité, lorsque ladite ampoule a été montée sur ledit culot.

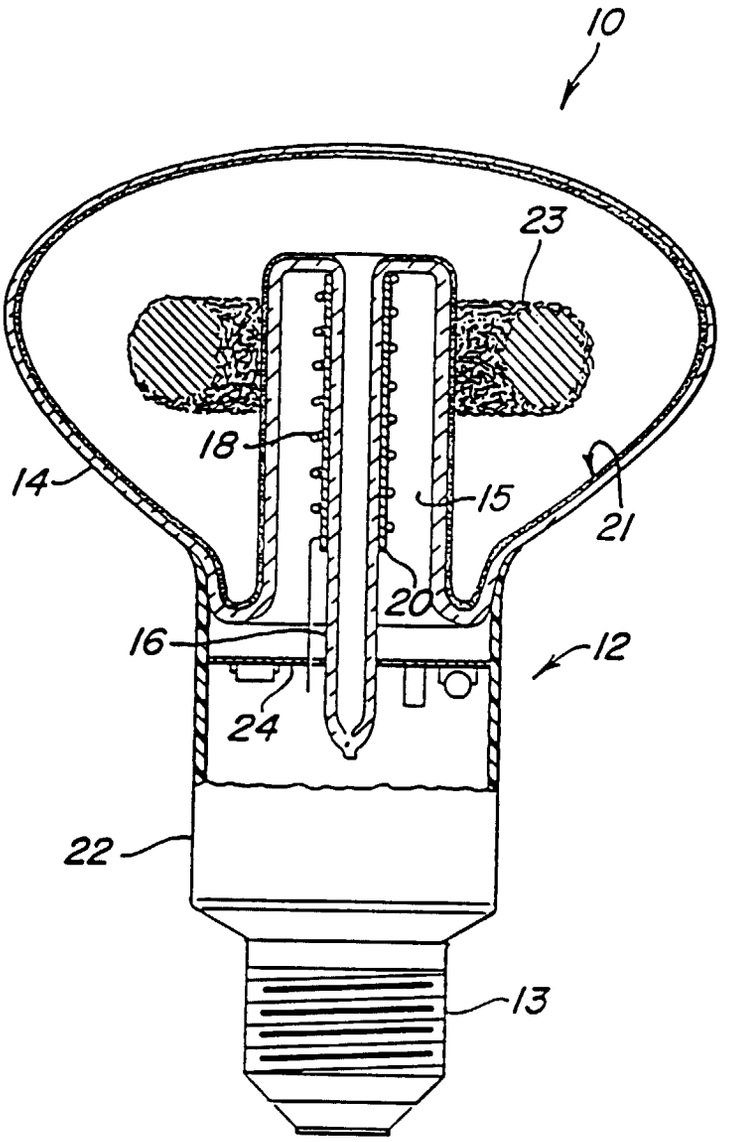

Fig.1

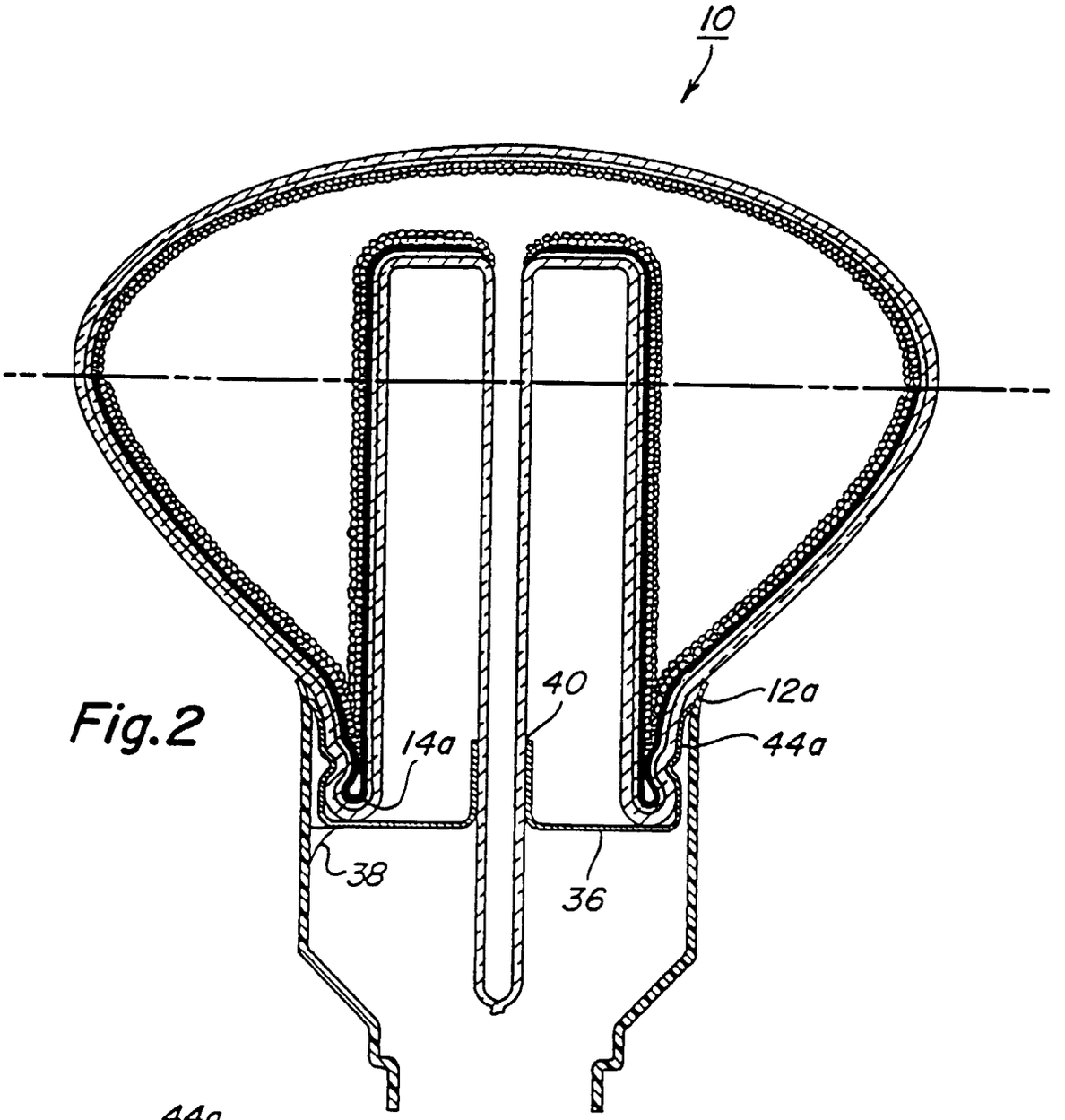

Fig.2

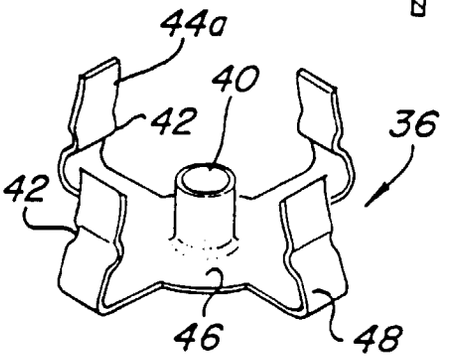

Fig.3