April 7, 1970 HANS-DIETER BASTAM ET AL 3,504,656

INTERNAL COMBUSTION ENGINE

Filed April 9, 1968

FIG.1

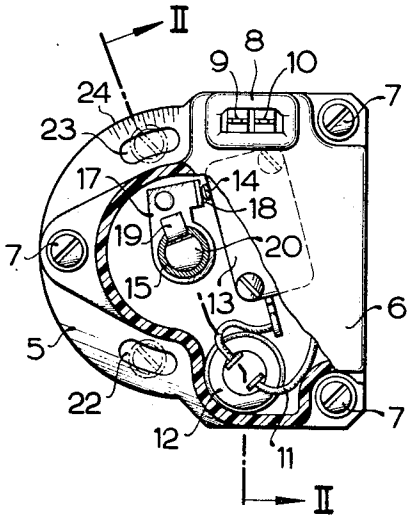

FIG.2

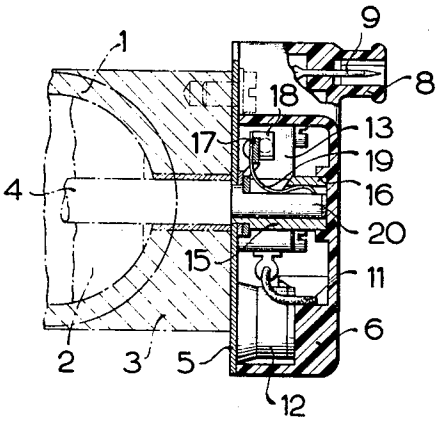

FIG.3

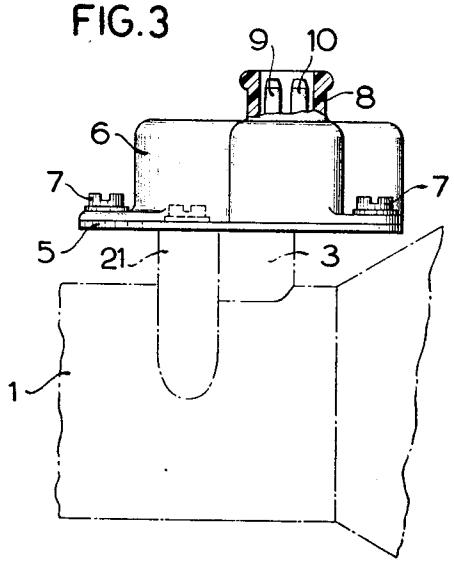

INVENTORS
Hans-Dieter BASTAM
Wolfgang REHMANN
Josef WAHL
By

Michael S. Striker

their ATTORNEY

United States Patent Office

3,504,656

Patented Apr. 7, 1970

1

3,504,656
INTERNAL COMBUSTION ENGINE

Hans-Dieter Bastam, Gerlingen, Wolfgang Rehmann, Pforzheim, and Josef Wahl, Stuttgart-Kaltental, Germany, assignors to Robert Bosch GmbH., Stuttgart, Germany

Filed Apr. 9, 1968, Ser. No. 719,989
Claims priority, application Germany, Apr. 19, 1967, B 70,609
Int. Cl. F02b *3/00*
U.S. Cl. 123—32 9 Claims

ABSTRACT OF THE DISCLOSURE

An internal combustion engine has an inlet conduit for combustible fluid, a closure member mounted in this inlet conduit and turnable between a plurality of first positions in each of which it permits passage of combustible fluid through the conduit and a second position in which it closes the conduit against passage of the combustible fluid. Feed means normally feeds combustible fluid into the conduit. A rotatable shaft is connected with the closure member so that the same can turn between the aforementioned positions thereof. A control means is provided adjacent the shaft and can be activated for terminating the operation of the feed means. Activating means is associated with the shaft and the control means and activates the latter to thereby terminate the operation of the feed means when the shaft rotates in a sense which results in movement of the closure member from one of the first positions to the second position thereof.

CROSS-REFERENCES TO RELATED APPLICATIONS

A related application is copending in the name of Reichardt et al. under Ser. No. 677,566, having been filed on Oct. 24, 1967. Reference may be had thereto for the background of the invention and the environment involved.

BACKGROUND OF THE INVENTION

The present invention relates to internal combustion engines in general, and more particularly to internal combustion engines which are provided with electrically controlled fuel injection aparatus.

It is well known that, in circumstances where the supply of air to the combustion engine has been reduced by suitable operation of the throttle valve, but where the engine continues to be driven because it is coupled with the wheels of the vehicle which it drives and which vehicle continues to advance under its momentum, it is desirable to significantly reduce the supply of fuel to the engine or to prevent such supply entirely. The purpose of this is to avoid supplying to the engine a mixture of combustible fuel and air which is too rich, that is which contains too large a proportion of fuel and will therefore improperly combust and be rendered from the engine in form of undesirable exhaust gases.

It is the object of the invention to overcome this problem.

SUMMARY OF THE INVENTION

In accordance with our invention we provide, in an internal combustion engine having a mixing chamber, an air inlet conduit communicating with said mixing chamber for admitting air into the latter, a closure member mounted in said air inlet conduit upstream of said mixing chamber and turnable between a plurality of first positions in each of which it permits passage of air through said conduit and a second position in which it closes said conduit against passage of the air therethrough, and fed means for normally feeding combustible fluid into said mixing chamber, a

2

combination which comprises a rotatable shaft on which the closure member is mounted for movement between said positions thereof, control means adjacent said shaft and activatable for terminating the operation of the feed means, and activating means which is associated with the shaft and the control means and which is operated for activating the latter for the purpose of terminating operation of the feed means in response to rotation of the shaft in a sense which resuls in movement of the closure member from one of the first positions thereof towards the second position thereof.

The novel features which are considered as characteristic for the invention are set forth in particular in the appended claims. The invention itself, however, both as to its construction and its method of operation, together with additional objects and advantages thereof, will be best understood from the following description of specific embodiments when read in connection with the acompanying drawing.

BRIEF DESCRIPTION OF THE DRAWING

FIG. 1 is a plan view, partly sectioned, of an arrangement according to the present invention;

FIG. 2 is a section taken on the line II—II of FIG. 1; and

FIG. 3 is a side view of the arrangement shown in FIG. 1 with other components of the combustion engine illustrated in phantom lines for explanatory purposes.

DESCRIPTION FO THE PREFERED EMBODIMENTS

The arrangement illustrated herein by way of example is intended for use with an internal combustion engine which is assumed to be provided with fuel injection. The engine itself is not illustrated in detail because it is so well known as not to require elaboration for those skilled in the art. However, in FIG. 3 we have shown in phantom lines a portion of the air inlet conduit **1** with a throttle valve **2** which is mounted on a rotatable or turnable shaft **3** journalled in a support **3**. This figure also shows diagrammatically the internal combustion engine, a mixing chamber thereof and feed means for feeding combustible fluid into the mixing chamber, with which the conduit **1** communicates.

As more fully illustrated in FIG. 1 and in FIG. 2, the arrangement according to the present invention is provided with a supporting plate portion **5**, which is advantageously of metallic material, and with a housing portion **6** which in turn advantageously consists of synthetic plastic material. The housing portion **6** is secured in the illustrated embodiment to the supporting plate portion **5** with the screws **7**. The housing portion **6** is provided with a lateral hollow projection **8** wherein there are mounted two electrical contacts **9** and **10**. These in turn are connected via a conductor **11** which is illustrated in the drawing only diagrammatically, with a temperature-sensitive switch **12**, here assumed to be a bi-metallic switch, as well as with an end-contact switch **13** which is connected in series with the switch **12**. The end-contact switch **13** comprises a plunger **14**. It is normaly closed but can be opened by depressing the plunger **14**. The switch **13** is mounted in the housing portion **6** by means of suitable screws so as to be immovable with reference to the housing portion **6**.

A sleeve **15**, also located within the housing portion **6**, is pushed over the end portion **20** of the shaft **4** on which the throttle valve member **2** is mounted. FIG. 2 shows most clearly that the sleeve **15** is turnably guided in a suitable bore provided in the supporting plate portion **5** but not identified with a reference numeral, and in an insert **16** provided in the housing portion **6**. An arm **17** is provided on the sleeve **15** projecting outwardly from the outer circumferential surface thereof. The arm **17** may be in-

tegral with the sleeve and be stamped from the material of the latter, or it may be a separate member, for instance stamped from sheet metal, which is secured to the sleeve **15** so as to be non-turnable and, in fact, non-movable with reference to the sleeve **15**. The free end of the arm **17** faces the plunger **14** of the switch **13** and is provided with a pressure plate portion **18** which is so angled with reference to the remainder of the arm **17** as to face the plunger **14**.

FIG. 2 illustrates how the sleeve **15** is mounted on the end portion **20** of the shaft **4**. The shaft **4** is provided with a flat facet which is visible in the drawing but not identified with reference numeral and the sleeve **15** is provided with an aperture or a slot (not separately identified with reference numeral) for which a curved leaf spring **9** extends into the interior of the sleeve **15**. This leaf spring **9** is secured in suitable manner to the arm **17** and, while its innerfree end abuts the internal surface of the sleeve **15**, its center portion presses against the flat facet of the end portion **20** of the shaft **4** when the sleeve **15** together with the housing portion **6** and the supporting plate portion **5** is pushed onto this shaft end portion **20** for coupling the entire arrangement with the shaft **4**.

The supporting plate portion **5** is provided in the illustrated embodiment with two elongated apertures, **22**, **23** which are substantially concentric with the axis of rotation of the sleeve **15** and through which screws—which are illustrated in the drawing in phantom lines—can be threaded into a rib **21** provided on the air inlet conduit of the combustion engine so as to secure the arrangement on this air inlet conduit. Construction of the apertures **22**, **23** as elongated apertures makes it possible to turn the housing with reference to the shaft **4** by approximately 15 degrees which of course changes the positioning of the arm **17** with respect to the plunger **14**.

It is clear that, when the shaft **4** and thereby the throttle valve member **2** turn in a sense in which the throttle valve member moves to its closed or second position preventing the flow of air through inlet conduit for complete or at least substantially reducing the flow of air therethrough, the arm **15** and the pressure plate portion **18** thereof will move towards the plunger **14** which will finally be engaged and depressed, thereby opening the switch **13** and in turn interrupting the supply of electrical energy to the non-illustrated electrically operated fuel-injection device. Of course, this interruption of the operation of the fuel-injection device by depressing of the plunger **14** of the switch **13** is to be carried out only when the throttle valve member **2** moves towards its closure position and has reached a point where it is within approximately 5 degrees from reaching its closure position, the exact setting depending upon the individual combustion engine with which the arrangement is being used. To make a precise setting possible for this purpose the supporting plate portion **5** is provided at the edge thereof with a scale **24** which refers to the axis of rotation of the sleeve **15** and thus makes it possible to readily adjust the positioning of the arrangement in the desired manner.

Of course, as the throttle valve member **2**, which is turned in conventional manner via a linkage by the gas pedal, is moved again to one of its open positions (the closed position being illustrated in the drawing), the pressure plate member **18** of the arm **17** recedes from the plunger **14**, thus permitting the switch **13** to close and to energize again the fuel-injection device.

The invention has been discussed herein with respect to its use in conjunction with a combustion engine having fuel-injection which is controlled electrically. However, it should be understood that it can be used in conjunction with all such electrically controlled arrangements in which an electrical control or regulating device is intended to operate in a different manner to perform a different function when the throttle valve of a combustion engine is in the closed or idle position than when the throttle valve is in open position. This includes, for example, electrically controlled couplings which are to make possible a transmission of power from the combustion engine to the drive wheels only when the air throttle valve is turned beyond a predetermined opening position. Other applications will of course offer themselves readily to those skilled in the art.

It will be understood that each of the elements described above, or two or more together, may also find a useful application in other types of constructions differing from the types described above.

While the invention has been illustrated and described as embodied in an internal combustion engine, it is not intended to be limited to the details shown, since various modifications and structural changes may be made without departing in any way from the spirit of the present invention.

Without further analysis, the foregoing will so fully reveal the gist of the present invention that others can by applying current knowledge readily adapt it for various applications without omitting features that, from the standpoint of prior art, fairly constitute essential characteristics of the generic or specific aspects of this invention.

What is claimed as new and desired to be protected by Letters Patent is set forth in the appended claims:

1. In an internal combustion engine having a mixing chamber, an air inlet conduit comprising peripheral wall means and communicating with said mixing chamber for admitting air into the latter, a closure member mounted in said air inlet conduit upstream of said mixing chamber and turnable between a plurality of first positions in each of which it permits passage of air through said conduit and a second position in which it closes said conduit against passage of the air therethrough, and feed means operative for normally feeding combustible fluid into said mixing chamber, the combination comprising a rotatable shaft on which said closure member is mounted for movement between said positions thereof and having a shaft portion extending through said wall means to the exterior of said air inlet conduit; and an independent control unit, including housing means, connecting means for removably connecting said housing means to said wall means, control means in said housing means adjacent to said shaft and activatable for terminating the operation of said feed means, and activating means in said housing means associated with said control means and comprising sleeve-type coupling means constructed and arranged for coupling engagement with a slip fit on said shaft end portion by sliding movement along the same, and resilient detent means indexing said sleeve for rotation with said shaft, said activating means being operative for activating said control means for terminating the operation of said feed means in response to rotation of said shaft in a sense resulting in movement of said closure member from one of said first positions towards said second position.

2. In a combustion engine as defined in claim **1**, wherein said control means is a switch having a movable contact-operating member adapted to be engaged by said activating means.

3. In a combustion engine as defined in claim **1**, said coupling means including sleeve means comprising an internal spring positioned so as to be deformed and stressed when said shaft end portion is received in said sleeve means and to thereby effect coupling of said sleeve means to said shaft for rotation with the same.

4. In a combustion engine as defined in claim **1**, wherein said sleeve means are turnable with reference to said control means.

5. In a combustion engine as defined in claim **4**, said sleeve means comprising an engaging portion adapted to engage said movable contact-operating member in response to rotation of said shaft towards said second position and consequent turning of said sleeve means with reference to said control means.

6. In a combustion engine as defined in claim 2, said switch having contacts which are normally in a closed position and being operable for movement of said contacts to an open position in response to engagement of said contact-operating member by said activating means.

7. In a combustion engine as defined in claim 4, said housing means comprising a metallic base plate portion and a synthetic plastic housing portion.

8. In a combustion engine as defined in claim 4, said housing means comprising a base plate portion provided with a pair of elongated apertures adapted for passage of mounting screws therethrough and extending at least substantially concentrically with said shaft and thereby with the axis of rotation of said sleeve means.

9. In a combustion engine as defined in claim 8, said sleeve means comprising an engaging portion adapted to engage said contact-operating member, and further comprising scale means provided on said base plate portion for enabling predetermining of desired angular shifting of said housing means with reference to said shaft and the axis of rotation of said sleeve means to thereby change

the position of said engaging portion with reference to said contact-engaging member.

References Cited

UNITED STATES PATENTS

2,843,098	7/1958	Dolza	123—139.17
2,957,464	10/1960	Dolza	123—139.17
2,139,355	12/1938	Coffey	123—119
2,725,895	12/1955	Chanrion	137—554 XR
2,841,131	7/1958	Zupancic	123—119
2,879,046	3/1959	Dolza et al.	123—97 XR
2,899,951	8/1959	Olson et al.	123—119
2,926,895	3/1960	Seyfarth	123—119 XR
2,974,921	3/1961	Kaswan	251—31 XR
3,189,700	6/1965	Eidson	200—61.86
3,310,044	3/1967	Haverstick	123—102

LAURENCE M. GOODRIDGE, Primary Examiner

U.S. Cl. X.R.

123—119