Nov. 24, 1953 O. ERTESZEK 2,660,173

DISPOSABLE INSERT PANTY GARMENT

Filed Feb. 4, 1952

Fig. 1.

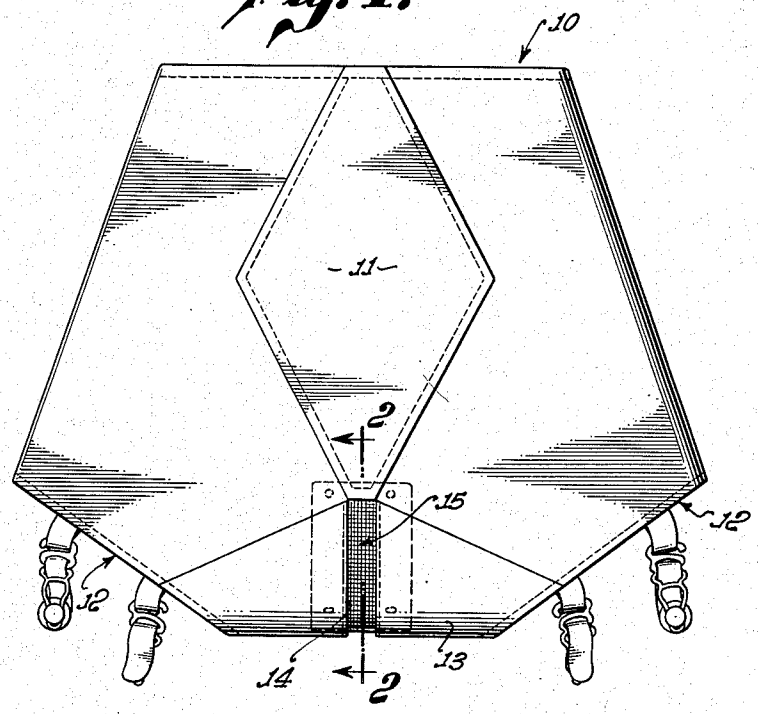

Fig. 2.

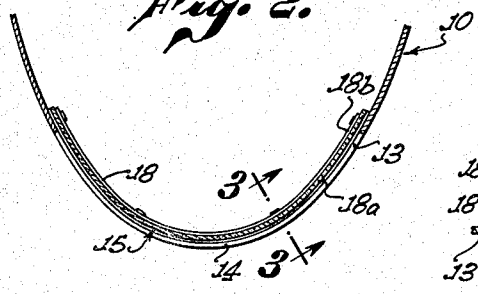

Fig. 3.

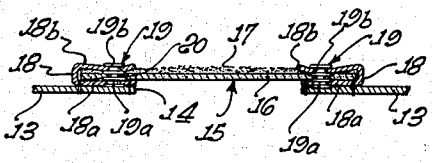

Fig. 4.

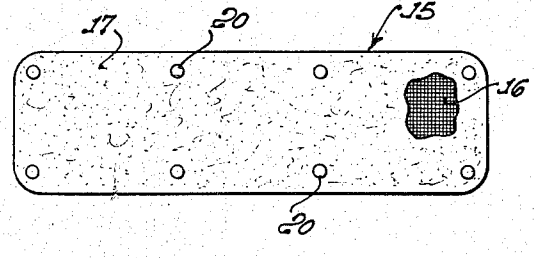

OLGA ERTESZEK,
INVENTOR.

BY Hamlin White

ATTORNEY.

Patented Nov. 24, 1953 2,660,173

UNITED STATES PATENT OFFICE

2,660,173

DISPOSABLE INSERT PANTY GARMENT

Olga Erteszek, Los Angeles, Calif.

Application February 4, 1952, Serial No. 269,777

5 Claims. (Cl. 128—288)

1

This invention has to do generally with women's panties and panty-type girdles, and particularly with improvements in the kind having a crotch opening and adapted to contain a removable insert which normally closes the opening. While applicable generally to panty garments, the invention will be described typically with respect to panty-type girdles.

Certain of my major objects are predicated upon the concept of providing the panty with a disposable crotch insert, the latter being disposable not only by reason of its mode of attachment but by reason of the characteristics and economy of the insert material. Specifically, it is contemplated that the insert may be made of a low cost material having such bulk reducibility or at least partial disintegrability in water as to be appropriate for toilet disposal.

Other objects have to do with the physical form of the insert, and the particular kind of garment-carried fastener means which is used for the purpose of properly and securely retaining the insert notwithstanding that it may be made of an inherently weak material.

While it is contemplated that the inserts may be made of any suitable material characterized by its disposability as indicated, I find it convenient to use a cellulosic sheet material having a loose or unwoven fibrous structure contributing to the disintegrability of the material in water. To give strength to an otherwise excessively weak fibrous structure, the material may contain appropriate reinforcement, such as an open weave fabric in the nature of cheesecloth.

It is found that the insert may effectively be held in place by fasteners of a type acting to detachably clamp against opposite surfaces of the insert and received within openings in the insert. For this purpose I may secure to the girdle about the crotch opening, spaced snap-type fasteners so mounted as to permit reception of the insert between the sections of the fasteners, with the latter received within openings in the insert material. Preferably in mounting the fasteners I use fold-over tabs or short tapes each carrying the spaced sections of an individual fastener, one end of the tab being secured to the garment, with the opposite end of the tab free to fold over the insert and bring the fastener sections into engaging positions.

For use with this fastener arrangement, the inserts may be made available very economically as single die-cut pieces containing openings spaced in accordance with the fastener arrangement about the crotch opening, all in a manner such

2

that the inserts may be secured within and removed from the garment very simply.

All the features and objects of the invention, as well as the details of a typical and illustrative embodiment, will be understood more fully from the following description of the accompanying drawing, in which:

Fig. 1 is a view showing in front elevation a typical pantie girdle construction embodying the invention;

Fig. 2 is a fragmentary cross section taken on line 2—2 of Fig. 1 through the crotch;

Fig. 3 is an enlarged cross section on line 3—3 of Fig. 2; and

Fig. 4 is a view showing the disposable insert.

First it should be understood that the invention is applicable to any of various pantie girdle constructions, and that the type and form shown in Fig. 1 is to be regarded merely as illustrative of various particular forms to which the invention is adaptable. The body 10 of the girdle preferably is made of suitable woven or knitted elastic material, as for example the kind having transversely or horizontally extending elastic threads joined by a knit-type weave so that the body of the girdle is elastic both horizontally and vertically. The front of the garment and also the rear if desired, may contain any suitable insert, such as the diamond-shaped panel 11, having little or no horizontal elasticity, but which is elastic vertically of the girdle. At the bottom, the garment contains the usual leg openings at 12 at opposite sides of the elastic crotch piece 13. The crotch contains an opening 14 extended in the plane of the section line 2—2, as best illustrated in Fig. 2.

The crotch opening 14 normally is closed by a removable and disposable insert 15 having preferably the general shape characteristics illustrated in Fig. 4. The insert 15 is shown to have the form of an elongated material proportioned to overlie the body material of the girdle at the inside of the crotch opening 14, and beyond its sides and ends. While the invention contemplates broadly the use of an insert made of any suitable disposable material, characterized by at least partial disintegrability in water, the insert as illustrated in Fig. 4 is shown to be made of a die cut cellulosic sheet stock, partly of randon or unwoven cellulose fiber composition which tends to disintegrate in water, and appropriate reinforcement to give the material adequate strength under normal conditions of use in the garment. Thus the material 15 is shown to be composed of an open

weave fabric 16, such as cheese cloth, to one or both surfaces of which is applied a coating of cotton linter or other long fibers 17 which contribute body and density to the composite. When put into water, as in a toilet for disposal, the insert partially disintegrates and so reduces in bulk as to be satisfactorily disposable.

An important feature of the invention is the mode of accommodation and attachment of the insert within the garment and in a manner such as to strongly hold and avoid tearing of the relatively weak insert material. As best illustrated in Figs. 2 and 3, applied to the inside of the garment at spaced intervals about the crotch opening 14, are a series of typically 8 cloth tabs or tapes 18 each having one end 18*a* attached to the garment, and a free end 18*b* which is adapted to receive and become doubled over the insert 15. The latter is held in place by snap fasteners 19 each comprising a section 19*a* secured to the garment or attached to the end 18*a* of the tab, and a second section 19*b* carried by the free end of the tab.

The spacing and arrangement of the snap fasteners correspond to the locations and spacing of openings 20 in the insert 15. Thus to secure the insert within the garment, the insert is placed at the inside with its openings 20 receiving the snap fastener sections 19*a*. The tabs 18 then are folded over the insert and the fastener sections interlocked through the openings of the insert to securely confine and hold the latter in place. It will be noted that upon interlocking, the snap fasteners bring considerable areas of the fabrics to which the fastener sections are attached, into tight pressural engagement with the insert material about its openings 20. Thus the confinement is primarily by virtue of pressural engagement of the fastener flanges, tab fabric or tab and garment fabrics, against opposed surfaces of the insert 15, rather than by mere confinement of the insert by reason of the fastener shanks being within the openings 20, with the result that the insert may be subjected to considerable tension without becoming torn away from its fasteners.

I claim:

1. A panty comprising a body material having a crotch opening, an insert normally closing said opening and made of a material consisting essentially of a sheet of loose-woven base fabric carrying unwoven cellulose fibers, said sheet having uniform composition throughout and to its edges and said material being at least partially disintegrable in water, and means for detachably securing said insert to the body material.

2. A panty comprising a body material having a crotch opening, an insert normally closing said opening and made of a material consisting essentially of a sheet of loose-woven base fabric carrying unwoven cellulose fibers, said sheet having uniform composition throughout and to its edges and said material being at least partially disintegrable in water, said sheet containing fastener-receiving openings within its material near opposite edges thereof, and fasteners carried by the body material and received within said openings.

3. A panty comprising a body material having a crotch opening, free end tabs secured to the body material about said opening, snap fasteners carried by said tabs, each fastener comprising a pair of spaced sections one of which is carried by and toward the free end of a tab and the other of which is located at the opposite end of the tab, and a detachable insert in essentially sheet form normally closing said opening and receivable between said fastener sections by doubling the tab about the edge of the insert, said insert containing openings for reception of said fasteners and said insert being made of a disposable cellulosic material at least partially disintegrable in water.

4. A panty comprising a body material having a crotch opening, free end tabs secured to the body material about said opening, snap fasteners carried by said tabs, each fastener comprising a pair of spaced sections one of which is carried by and toward the free end of a tab and the other of which is located at the opposite end of the tab, and a detachable insert normally closing said opening and receivable between said fastener sections by doubling the tab about the edge of the insert, said insert containing openings for reception of said fasteners, said insert being made of a disposable material comprising an open weave fabric carrying unwoven cellulose fibers rendering the material partially disintegrable in water.

5. A disposable garment crotch opening closure, comprising a sheet of disposable material containing spaced openings for reception of garment-carried fasteners, said sheet and material consisting essentially of a loose-woven base fabric carrying unwoven cellulose fibers, the sheet being of uniform composition throughout and to its edges and being at least partially disintegrable in water.

OLGA ERTESZEK.

References Cited in the file of this patent

UNITED STATES PATENTS

Number	Name	Date
2,522,009	Wohlman	Sept. 12, 1950
2,531,772	Erteszek	Nov. 28, 1950

FOREIGN PATENTS

Number	Country	Date
12,065	France	Apr. 15, 1910