March 22, 1927. 1,621,521

G. C. CAPPA

MEANS FOR COOLING THE VALVE STEMS AND SEATS IN INTERNAL COMBUSTION ENGINES

Filed Feb. 13, 1925

Fig. 1

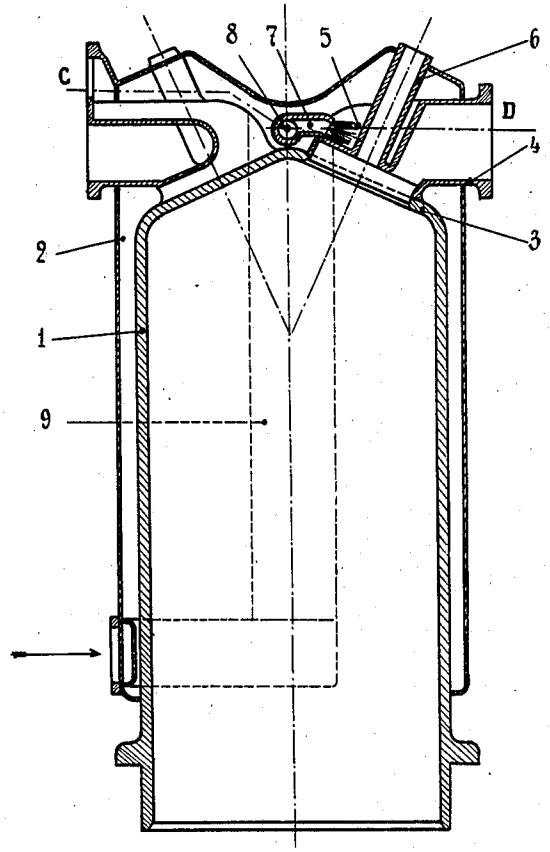


Fig. 2

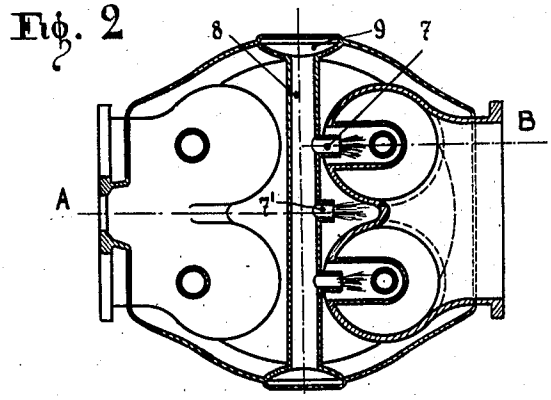


Inventor

Giulio Cesare Cappa,

By Henry Orth & Co Atty.

Patented Mar. 22, 1927. 1,621,521

# UNITED STATES PATENT OFFICE.

GIULIO CESARE CAPPA, OF TURIN, ITALY.

## MEANS FOR COOLING THE VALVE STEMS AND SEATS IN INTERNAL-COMBUSTION ENGINES.

Application filed February 13, 1925, Serial No. 8.905, and in Italy February 23, 1924.

This invention relates to a cooling arrangement for the engine valves, wherein a number of nozzles are disposed in correspondence with the valve seats and turned towards these latter, so as to send a water jet on the hotter parts of the seats and of the stem boxes.

This device ensures an efficient and complete cooling of the members to which it is applied, also because the active stream of liquid removes the steam bubbles, as soon as they may have formed, thus preventing superheating of the parts.

The accompanying drawing shows diagrammatically and by way of example the invention in connection with an explosion engine cylinder with double valves.

Figure 1 is an axial vertical section on line A—B of Fig. 2.

Figure 2 is a horizontal section on line C—D of Fig. 1.

1 denotes the cylinder bore, with a water jacket 2, which surrounds also the seats 3 and the pipes 4 of the suction and outlet valves. These pipes differ from the normal construction in that they have a large heat exchanging surface 5 forming recesses surrounding the valve guides 6 and communicating directly with the water jacket. In correspondence to these recesses are provided nozzles 7 fed through a cross tube 8 served directly by the pump through a conduit 9.

Between each valve couple is arranged another nozzle 7', from which the water jet is sent into the hollow between the two contiguous pipes.

These water jets besides producing an efficient cooling of the parts directly subjected thereto, actively stir the water surrounding the valve-guides thus improving the heat exchange, preventing the formation of steam bubbles or immediately removing those that might have formed. The water discharge from the nozzles circulates around the boxes 6, in the recesses 5 and out of the latter into the jacket 2 and around the cylinder.

If convenient further nozzles can be provided in other parts for cooling purposes and their shape and arrangement can be varied from the above described without departing from the spirit of the invention.

What I claim is:

The combination of a cylinder for internal combustion engines, having guides for the stems of the inlet and exhaust valves of the engine, inlet and exhaust pipes having large heat exchanging surfaces forming recesses surrounding and extending between the valve guides, a cooling jacket surrounding the cylinder and extending above the latter thereby enclosing said guides and heat exchanging surfaces, water supply pipes extending longitudinally of the cylinder between the wall of the latter and the jacket, an extension of the supply pipe extending horizontally through the jacket across the top of the cylinder head, and nozzles in said extension for discharging water onto the valve guides and into the recesses and water jacket through the top of the latter.

In testimony whereof I have affixed my signature.

GIULIO CESARE CAPPA.