Jan. 26, 1932. G. S. VAN SCHANTZ 1,842,887

TRANSOM OPERATOR

Filed Dec. 14, 1928 2 Sheets-Sheet 1

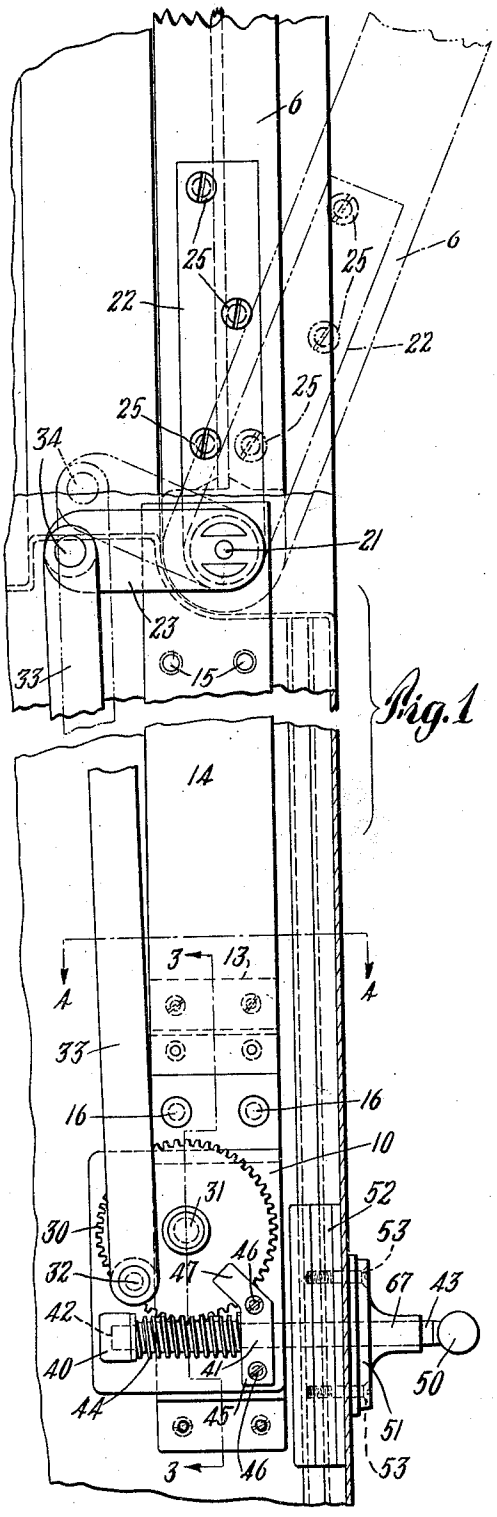

Fig. 1

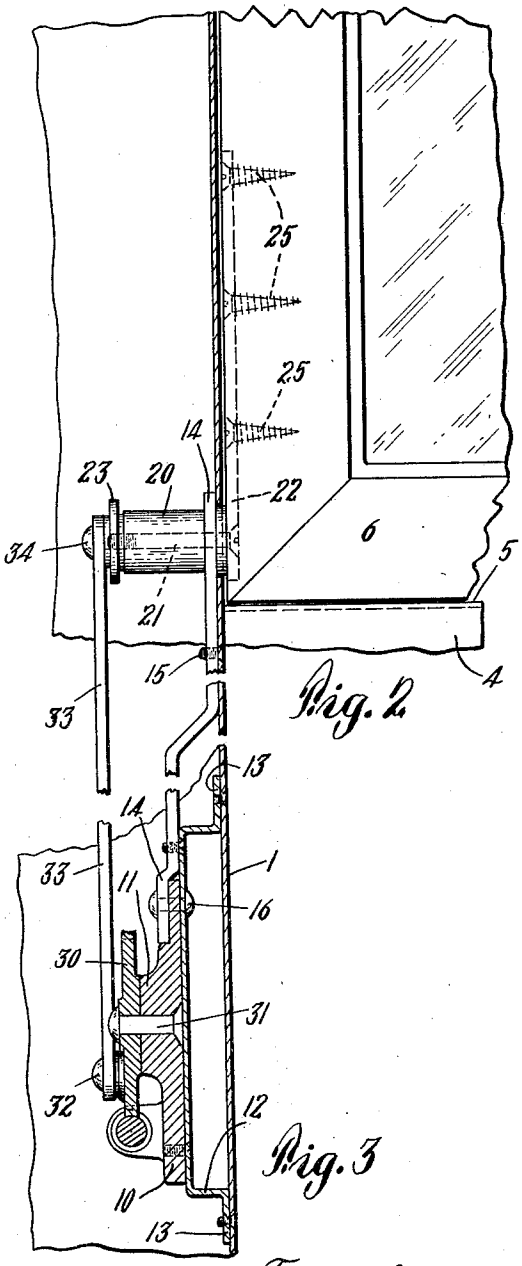

Fig. 2

Fig. 3

Inventor:
Gustaf S. Van Schantz.
by
Wright Brown Quinby & May
Attys.

Jan. 26, 1932. G. S. VAN SCHANTZ 1,842,887

TRANSOM OPERATOR

Filed Dec. 14, 1928 2 Sheets-Sheet 2

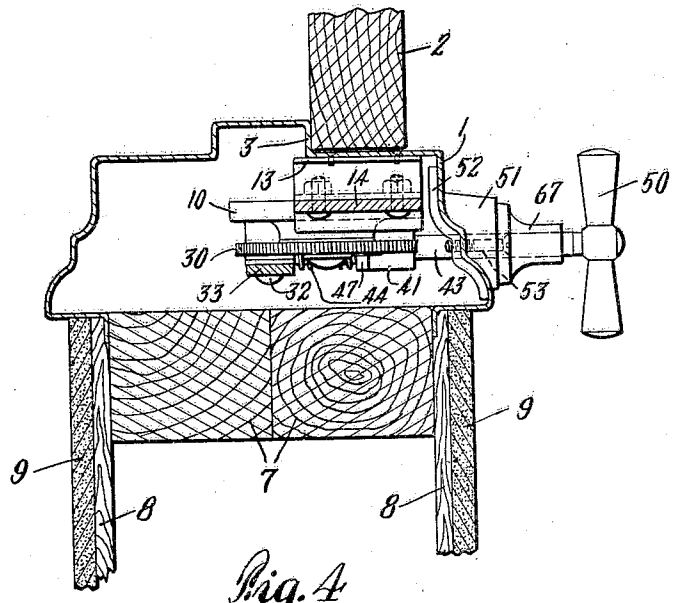

Fig. 4

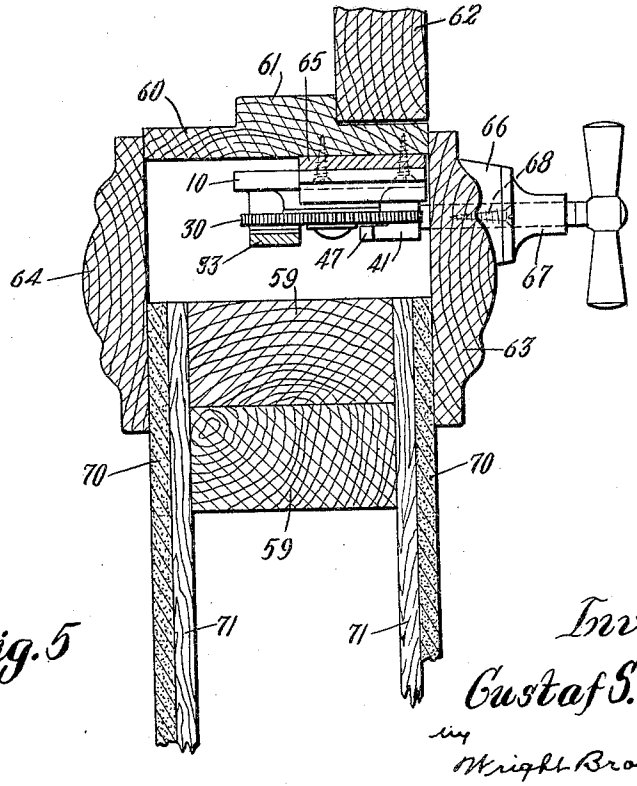

Fig. 5

Inventor:
Gustaf S. Van Schantz.
by
Wright Brown Quinby & May
Attys.

Patented Jan. 26, 1932

1,842,887

UNITED STATES PATENT OFFICE

GUSTAF S. VAN SCHANTZ, OF NEWTON, MASSACHUSETTS, ASSIGNOR TO E. T. RYAN IRON WORKS, INC., OF ALLSTON, MASSACHUSETTS, A CORPORATION OF MASSACHUSETTS

TRANSOM OPERATOR

Application filed December 14, 1928. Serial No. 326,020.

This invention relates to mechanism for opening and closing transoms or the like and wherein the main portion of the mechanism is concealed by the trim of the building from which extends only that portion which is necessary for actuation.

One object of the present invention is to provide such a mechanism of simple and rugged construction which requires no attention to maintain it in operative condition even though it may be idle for long periods. To this end a mechanism is carried by a foundation strip which may be secured to one of the building uprights and be concealed by the finish. At the lower end of this strip is mounted a worm gear provided with a crank pin. This pin is connected through a link with an arm pivoted at the upper end of the foundation strip. This arm has as its pivotal axis the pivot for the transom about the axis of which it is turned when it is being opened or closed. A worm is held in mesh with the worm gear, the worm shaft being extended through the building finish and being provided with means by which it may be turned as desired by the operator.

For a more complete understanding of this invention reference may be had to the accompanying drawings in which

Figure 1 is a fragmentary vertical section through the door framing showing the mechanism in side elevation.

Figures 2 and 3 are detail sections on lines 2—2 and 3—3, respectively, of Figure 1.

Figure 4 is a horizontal section on line 4—4 of Figure 1.

Figure 5 is a view similar to Figure 4, but showing a wooden door frame.

Referring first to Figures 1, 2 and 4. At 1 is shown a sheet metal door frame, the door being shown at 2 and the jamb at 3. Above the door is a cross frame member 4 above which is an opening 5 within which is positioned the transom 6. At 7 is shown the door posts to which the metal trim 1 is secured, these posts supporting the lathing at 8 on which the plaster 9 is laid. To the inner face of the metal trim 1 is secured the operating mechanism for the transom, most of which is entirely concealed from view by this trim.

This mechanism, as shown best in Figures 1 and 2, comprises at its lower end a cast metal plate portion 10 having a boss 11 projecting from one face thereof. This cast metal plate 10 is shown as secured to a bracket strip 12 having end flange portions 13 which are secured to the inner face of the metal trim 1 as shown best in Figure 3. To the upper end of the cast plate 10 is secured the lower end of a rolled plate or strip 14 which above the bracket strip 12 is bent into the plane of the flange portions 13 so as to contact with the inner face of the metal trim 1 to which it may be secured as by means of the screws 15. This plate 14 may be secured as by rivets 16 to the plate 10. At its upper end the plate 14 is provided with a journal opening for the transom pivot. As shown this pivot comprises a sleeve portion 20 through which extends a screw 21. This screw 21 secures a plate 22 to the end of the sleeve 20, being threaded into an arm 23 at the opposite end of the sleeve 20, thus clamping the plate 22 and arm 23 against opposite ends of the sleeve. The plate 22 is secured to the outer edge of the transom 6, as shown this plate being set into this edge and secured thereto by the screws 25. The sleeve 20 thus forms the pivot for the transom about the axis of which the transom is turned when being opened or closed. It should be understood, of course, that a suitable pivot (not shown) for the opposite end of the transom and in axial alignment with the sleeve 20 will be employed.

Centrally of the boss 11 of the cast plate 10 is journaled a worm wheel 30, as shown a rivet 31 forming the pivotal axis. This worm wheel 30 is provided with a crank pin 32 inwardly of its periphery on which is journaled the lower end of a link 33, the upper end of which is pivoted to the end of the arm 23 as at 34. Extending outwardly from the outer face of the cast plate 10 are a pair of integral bearings 40 and 41. The bearing 40 is formed with a bearing socket 42 to receive the inner end of a worm shaft 43 having a worm portion 44 thereon meshing with the teeth of the worm wheel 30. The bearing at 41 is open at its outer end, this being normally covered to retain the worm shaft in

position therein by a cover or cap plate 45 which may be fixed in position as by suitable cap screws 46. This cover plate 45 has an extension portion 47 which overlies the outer face of the worm wheel 30 on the opposite side to the boss 11, this acting therefore as a retainer for the worm wheel and holding it against lateral play adjacent to that portion which meshes with the worm 44. The worm shaft 43 extends through the metal trim 1 and is shown as provided with a handle 50 at its outer end by which it may be rotated. In order to properly support this worm shaft at its outer end a reinforcing bearing bracket portion 51 and a bearing 67 through which the worm shaft passes is shown as secured to the outer face of the metal trim 1. In order that these parts may be rigidly so fixed it is preferable to employ a reinforcing strip 52 conforming to and positioned against the inner face of the trim 1, the securing screws 53 for the member 67 passing through the member 51, and the trim 1 and having their inner ends threaded into the reinforcing plate 52. This worm and worm wheel construction affords an exceedingly simple mechanism which can be made of some noncorroding material such as brass or bronze which needs no lubrication and which will not become stuck or otherwise inoperative throughout long periods of disuse. The bearings for the worm shaft may be lined if desired with suitable self-lubricating bearing alloys such as are well known, so that the mechanism may operate substantially noiseless at all times.

In Figure 5 a slight modification is shown for attachment to a wooden construction in place of the metal trim member 1 shown in Figure 4. The wooden door frame post is shown at 60 having the jamb portion 61 against which the door 62 engages, this door post being spaced from the post member 59 of the building partition by the stiles 63 and 64. The plate 10 of the transom operator is then secured as through a suitable bracket to the inner face of the post 60, a suitable block 65 being interposed, if desired, in order that the shaft 43 may be extended through one of the stiles in the desired position between its side edges. The plate 14 may be so formed as to engage the inner face of the post 60 at its upper end where the transom pivot is positioned. To the outer face of the stile may be fixed the block 66 providing a flat outer face to receive the worm shaft bearing 67 which may be fixed by screws 68 extending through the block 66 and into the stile. As shown the stiles 63 overlie the margins of the plaster 70 which is secured to the laths 71 fixed to the wooden posts 59.

From the foregoing description of certain embodiments of this invention it should be evident to those skilled in the art that various modifications and changes may be made therein without departing from its spirit or scope as defined by the appended claims.

I claim:

1. A mechanism of the class described comprising a plate having a boss projecting from one face thereof, a worm wheel journaled centrally on said boss, a crank pin carried by said worm wheel, a worm shaft having a worm portion in mesh with said worm wheel, bearings for said worm shaft carried by said plate, one of said bearings having an extension overlying said worm wheel, and a transom actuating connection from said crank pin.

2. A mechanism of the class described comprising a cast plate having a boss extending from one face, a worm wheel journaled concentrically at the end of said boss, a worm shaft having a worm portion in mesh with said worm wheel, integral journal members for said shaft projecting from said plate, a top plate for one of said journal members having an extension overlying said worm wheel on the opposite sides from said boss, a rolled plate fixed at one end to said cast plate and having a transom pivot journaled therein, and operative connections between said worm wheel and said transom pivot.

3. A mechanism of the class described comprising a plate having a boss extending from one face, a worm wheel journaled at the end of said boss, a worm meshing with said worm wheel and having bearings carried by said plate, one of said bearings having a portion overlying said worm wheel adjacent to its engagement with said worm and preventing excessive lateral play of said worm wheel, said worm wheel having a crank pin inwardly of its periphery, a transom having a pivot, an arm fixed to said pivot, means for holding said plate and pivot in fixed relation, and a link pivoted at opposite ends to said arm and on said crank pin.

In testimony whereof I have affixed my signature.

GUSTAF S. VAN SCHANTZ.