Feb. 10, 1970 F. T. COKER, JR 3,494,157

MAGNETIC LOCK

Filed Aug. 1, 1968 2 Sheets-Sheet 1

FIG. 1

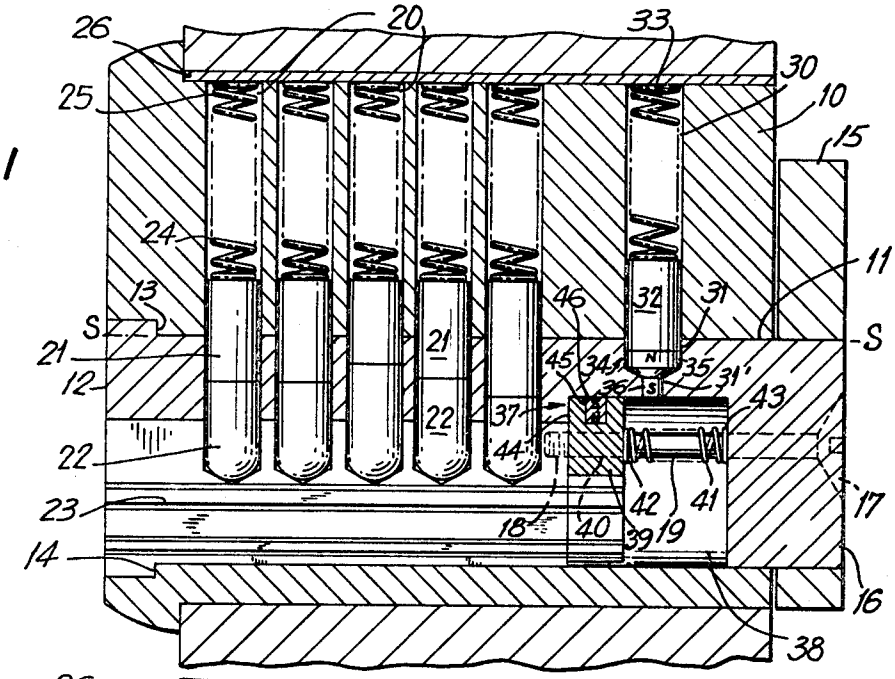

FIG. 2

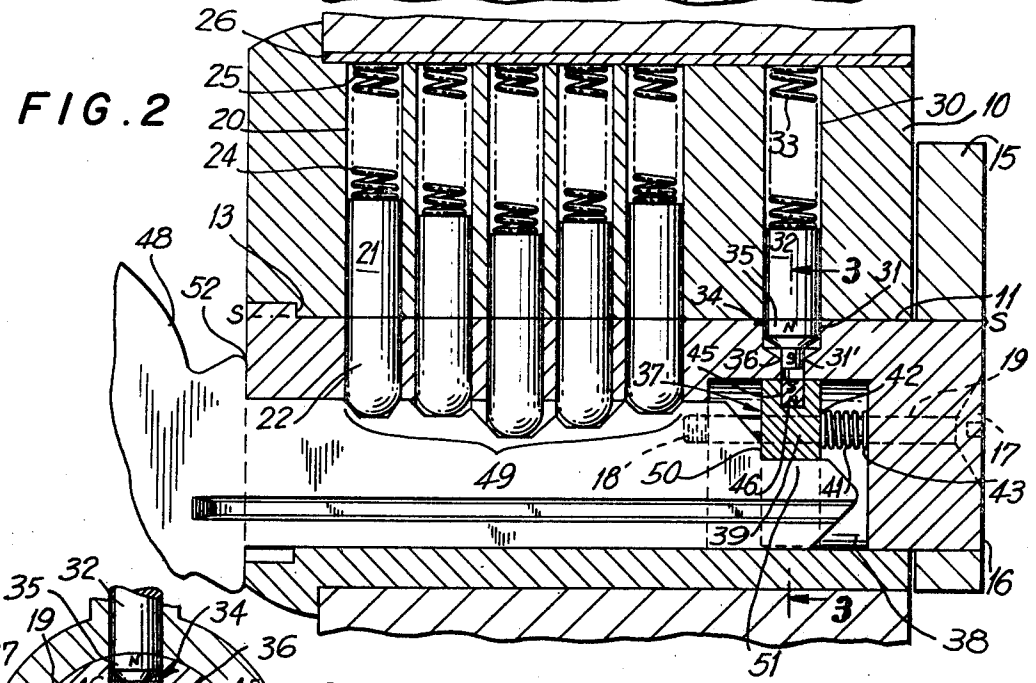

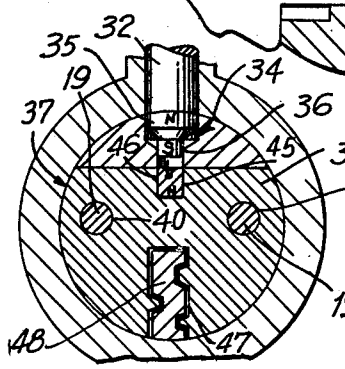

FIG. 3

INVENTOR.
FREDERICK T. COKER, Jr.

BY Mark Bruecker

ATTORNEY

Feb. 10, 1970 F. T. COKER, JR 3,494,157

MAGNETIC LOCK

Filed Aug. 1, 1968 2 Sheets-Sheet 2

FIG. 4

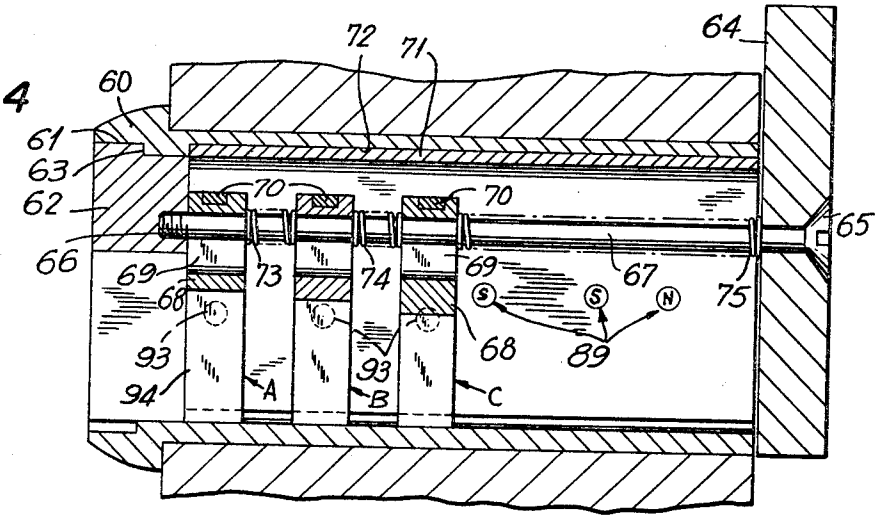

FIG. 5

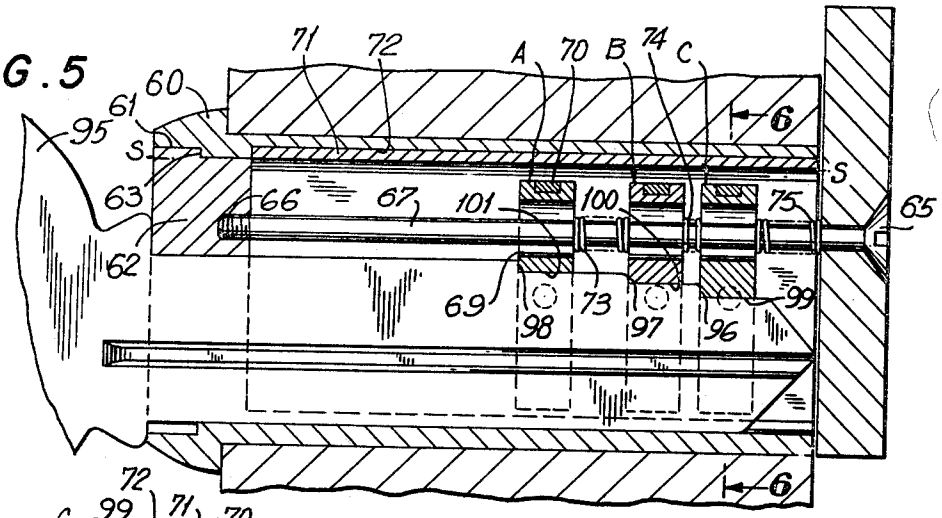

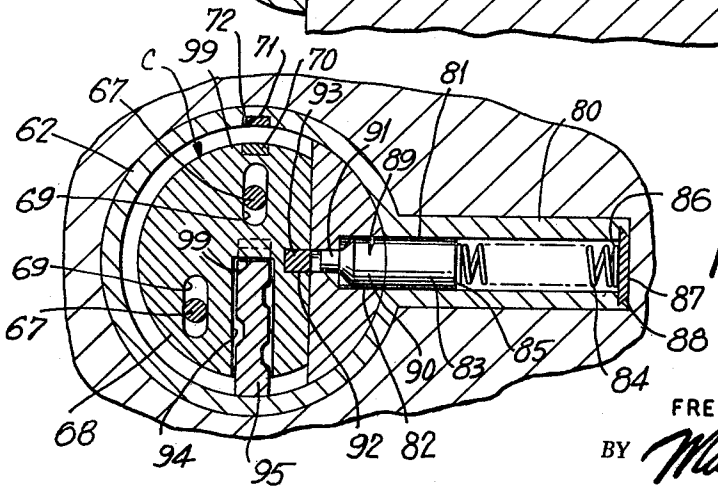

FIG. 6

INVENTOR.
FREDERICK T. COKER, Jr.
BY Mark Bauecher
ATTORNEY

United States Patent Office 3,494,157 Patented Feb. 10, 1970

3,494,157

MAGNETIC LOCK

Frederick T. Coker, Jr., Boylston, Mass., assignor to Ilco Corporation, Fitchburg, Mass., a corporation of Massachusetts

Filed Aug. 1, 1968, Ser. No. 749,484
Int. Cl. E05b 19/26, 47/00
U.S. Cl. 70—276 16 Claims

ABSTRACT OF THE DISCLOSURE

An improved magnetic lock having magnetic release means for shifting locking means from straddling position of the lock shear line, characterized by a magnet carrier member or members movably mounted in the lock plug and normally displaced from the magnetic release means, and essentially conventional key means for aligning magnetic portions of the carrier members with the magnetic release means, thereby to shift the locking means to the release position thereof.

BACKGROUND OF THE INVENTION

Field of the invention

This invention is in the field of locks, and particularly high security locks. Still more particularly, this invention is in the field of locks employing magnetic elements as the means for releasing a lock from the locked position thereof.

The prior art

It has been proposed for many years to provide locks which operate on magnetic principles. Examples of a variety of forms of such locks may be found in the following U.S. patents: No. 2,966,789 of Jan. 3, 1961 and No. 3,111,834 of Nov. 26, 1963.

Despite the existence of such designs, the proportion of magnetic to mechanical locks has remained very small and magnetic locks have heretofore enjoyed a very limited acceptance. The limited use of locks of this type is considered to be occasioned by a series of factors including high initial cost, low security, problems in forming replacement keys and high cost of such keys, the limited number of available locking combinations, and the tendency, after protracted use, of keys to lose their ability to release the locking mechanism.

In early magnetic lock designs, lock elements were aligned in one or two planes and a skillful manipulator having knowledge of the design of the lock could compromise the lock through the judicious use of magnetic picks.

In more recent designs, greater security was achieved, at the expense of great complexity, by offsetting the locking members at a multiplicity of diverging angles. Such complex devices required for their operation a key having a multiplicity of magnetic members disoriented from each other at angles corresponding to the angles of the magnetic lock operating members. As will be readily apparent, such a key is exceedingly difficult to manufacture and the tools, jigs, dies and knowhow required for their duplication are far beyond the capacity of the ordinary locksmith.

Thus, in the only reasonably secure magnetic lock known to be available on the market, replacement keys must be procured from the factory, with attendant delays and at a considerably higher cost than normal replacement keys.

Heretofore all magnetic locks have required the use of keys containing magnets. A drawback of magnet containing keys lies in the fact that the magnetic forces are reduced by a factor which is proportional to the square of the distance between the spaced magnetic components. Since all magnetic keys must provide clearance between the magnets in the key and the magnets contained in the lock, there is an inherent separation in such units which necessitates the employment of particularly high strength, large sized magnet components. Further, since the magnet materials used in the key device are easily fractured or crumbled, it is necessary to provide a protective layer or shield over the shank of the key to prevent damage to the magnets. Such shield further reduces the magnetic efficiency of the device by requiring a still greater spacing of the parts and by adding a low permeability material between the magnet units.

SUMMARY OF THE INVENTION

A magnetic lock operable by a non-magnetic key and having locking means shiftable between lock plug releasing and lock plug locking positions and incorporating magnetic means within the lock for releasing the locking means, characterized by movable magnetic carriage means shifted by insertion of a proper key to predetermined aligned position with the magnetic lock releasing means. The carriage means may be shiftable axially or transversely or angularly within the lock plug, or may be moved in a combination of such directions.

It is therefore an object of the invention to provide an improved magnetic lock.

It is a further object of the invention to provide an improved lock of the type described which use a conventional, e.g. non-magnetic, key.

A further object of the invention is to provide a device of the class described having high security.

A further object of the invention is to provide a lock having in combination with a magnetic locking system of the type described, a series of conventional locking elements.

To attain these objects and such further objects and such further objects as may appear herein or be hereinafter pointed out, reference is made to the accompanying drawings, forming a part hereof, in which:

FIGURE 1 is a vertical section through a lock device incorporating a magnetic locking component in accordance with the invention;

FIGURE 2 is a view siimlar to FIGURE 1 showing the lock device in the release position thereof;

FIGURE 3 is a section taken on the line **3—3** of FIGURE 2;

FIGURE 4 is a vertical sectional view of an embodiment of the invention;

FIGURE 5 is a view similar to FIGURE 4 showing the position of the parts in the unlocked condition;

FIGURE 6 is a section taken on the line **6—6** of FIGURE 5.

Referring now to the drawings, there is shown in FIGURES 1 to 3 a lock device incorporating a series of conventional locking pin tumblers in conjunction with an auxiliary magnetic locking element.

In the noted embodiment, a lock housing **10** is provided with a cylindrical bore **11**, within which bore is rotatably mounted a lock plug **12**. The plug **12** has an annular shoulder portion **13** adjacent the outer face of the lock which is enlarged in relation to the main body of the plug, the shoulder abutting an outwardly directed complemental shoulder **14** adjacent the outer end of the housing. The abutting faces of the shoulders **13**, **14** prevent inward movement of the plug relative to the housing.

An essentially conventional lock operator cam **15** is affixed within a slot formed adjacent the inner end **16** of the plug, as by a parallel pair of machine screws **17**, **17**,

the inner ends **18** of which are threadedly connected within complemental tapped apertures formed in the interior of the plug. The machine screws **17** include medial unthreaded shank portions **19** for purposes which will be explained hereinafter.

A plurality of cross bores **20** extend from the housing into the plug **12**, in well known manner. The cross bores **20** are filled with the usual follower pins **21** and driver pins **22**, there being included, if desired, the usual intermediate pins for mastering. The pins **21**, **22** are urged radially inwardly toward the keyway **23** by springs **24**, the inner radial ends of which are pressed against the follower pins **21**. The outer ends **25** of the springs are biased against a spring retainer slide **26** seated within an undercut, dove-tailed slot formed in the housing.

It will be readily recognized that the operation of the locking pins is, in all respects, conventional, the pins functioning in the usual manner to lock the plug against rotation relative to the housing until the pins are lifted to align the junctions of the driver and follower pins **21**, **22** with the shear line S—S, coinciding with the junction of the plug and housing.

In accordance with the present invention, additional security is provided by a magnetically activated lock mechanism. The magnetic lock mechanism comprises an additional cross bore **30** formed in the housing **10**, which cross bore is disposed in registry with a cross bore **31** formed in the plug in the locked position of the apparatus.

The locking pin **32** is biased downwardly by driver spring **33** so that the lowermost end of the pin **32** extends across the shear line S—S and into the cross bore portion **31** of the plug. The cross bore **31** may include a lower, reduced diameter portion **31'**. Seated within the cross bore portions **31**, **31'** is a magnetic locking pin **34**, incorporating an enlarged head portion **35** and a reduced foot portion **36**.

As will be observed from FIGURE 1, the magnetic pin **34** is pressed radially inwardly by the downward force exerted by the pin **32** under the influence of driver spring **33**. The magnetic pin **34** is formed so that the poles lie at the upper and lower faces of the pin, in the illustrated embodiment the lowermost pole being the south pole and the uppermost pole being the north pole.

The magnetic pin is released to the unlocking position thereof by an appropriate axial movement of a slide assembly **37** disposed within a clearance way **38** formed adjacent the inner end of the lock plug. The slide assembly **37**, as best seen in FIGURE 3, comprises a wafer member **39** of parti-circular conformation and formed with a pair of laterally spaced-apart apertures **40**, **40** through which slidably extend the shank portions **19**, **19** of the retainer screws **17**.

A pair of wafer springs **41** are sleeved over the shanks **19**, the forward edges **42** of the springs being pressed against the rear face of the wafer **39**, the rear end **43** of the springs being biased against a rear portion of the lock plug. It will be observed that the springs **41** function to urge the wafer **39** yieldably toward the front or outer end of the lock plug and against a rearwardly facing shoulder **44** formed on the plug. The wafer **39** is provided with an upwardly directed recess **45**, within which recess is mounted a lock operator magnet **46**. The polarity of the lock operator magnet is adjusted so that the upper pole of said magnet is the same as the polarity of the lower pole of the magnetic pin **34**.

The wafer **39** is provided with a clearance slot **47** in alignment with the keyway **23** of the plug, the slot **47** of the wafer being preferably formed with the usual irregular cross section to correspond with the remaining portions of the keyway **23**.

The lock is operated by a specially formed key **48**, having the usual bitting **49**. The bitted portions **49** function to lift the lower pins **22** so as to align the junction of the upper pins and the lower pins with the shear line S—S. In addition, the key **48** includes a transverse shoulder **50** adjacent the innermost end of the key, which shoulder is of a height to permit the tip portion **51** of the key to pass through the slot **47**.

When the key **48** is inserted, it will carry the wafer **39** a predetermined distance rearwardly. Obviously the amount of inward or rearward movement imparted to the wafer **39** by the key **48** will be a function of the spacing of the shoulder **50** from the main key shoulder **52**. In a properly formed key, this spacing will be such as to cause the magnetic insert **46** carried by the wafer to be precisely aligned beneath the magnetic pin **34**, to align the like poles (in this instance, the south poles) of the magnets **46** and **34** when the key is fully inserted.

When this relation is achieved, an outward repelling force will be exerted against the magnetic pin **34**, lifting the junction of the pins **34** and **32** to the shear line S—S. The lock may then be operated by the key since the junctions of all of the pins, i.e. the conventional locking pins **21**, **22** and the magnetic control pins **34**, **32** will have been disposed at the shear line.

Optionally and preferably, means are provided to assure that the magnetic pin **34** is not elevated upwardly into the cross bore **30**. A multiplicity of mechanisms for this purpose may be envisioned, including selective sizing of the bores to prevent such entrance, the use of a cross pin to prevent undue lifting of the magnetic pin, etc.

Preferably also, the spring **33** exerts a relatively light downward force on the pin **32** so that only minimal forces must be overcome by the repelling magnetic components. Desirably, the magnet components of the pin **34** and the magnetic insert **46** are balanced with respect to the force exerted by the spring **33** in such manner that the lifting force applied by the magnets is insufficient to raise the junction of the magnetic controlled pins to the shear line unless a precise alignment of the magnetic elements is achieved. In other words, it is preferable to prevent lifting the magnetic pin junction to the shear line if only partial registry between the magnetic pin and the magnet **46** is achieved, such construction obviously adding to the security of the lock.

While in the embodiment of FIGURES 1 to 3 the magnetic element has been shown at the innermost end of the lock plug, i.e., inwardly of all of the conventional pins, it will be readily appreciated that the magnetic locking component may be disposed centrally of the conventional locking pins or outwardly of such pins.

Similarly, while only a single magnetic locking element has been shown in combination with multiple conventional locking units it will be readily recognized that two or more magnetic locking members may be employed.

Turning now to the embodiment of FIGURES 4 to 6, there is disclosed a device wherein the locking function is provided solely by a series of key actuated magnetic control elements. In this embodiment the housing **60** is formed with the usual central bore **61**, within which bore the plug **62** is rotatably mounted, being secured against endwise removal in an inward direction by shoulders **63**, and in an outward direction by the lock operator cam **64**.

In this instance, a pair of vertically spaced-apart machine screws **65** maintain the lock operator cam **64** in the mounted position at the inner end of the plug, the distal ends **66** of the screws **65** being threaded into the plug adjacent the front end of the plug, the main body or shank **67** of the screws **65** being smooth throughout the major portion of their length. In this instance, the shank portion **67** of the screws **65** serves as a mounting and guiding track for a series of magnet carrying wafers **68**, three being illustrated.

The wafers **68** are provided with spaced, vertically aligned slots **69**, **69** for receiving the shank portions **67**, **67** of the screws. As will be best appreciated from a consideration of FIGURE 6, the wafers **68** may move axially of the lock body and, by reason of the over-sized slots **69**, are also permitted a degree of up and down movement. The wafers, at their upper perimeter, are preferably pro-

vided with magnetic inserts **70**, the upper ends of which are of common polarity.

An elongated magnetic insert **71** is secured within a recess **72** formed in the plug **62**, the radial inner surface of the elongated insert being of the same polarity as that of the outermost ends of the inserts **70** of the wafers.

As will be readily apparent, the magnetic insert **71** will react against the like poled inserts **70** of the wafers and tend to urge the magnetic elements downwardly within the plug when the elements **68** are shifted rearwardly within the plug. It will be readily recognized that the downward movement imparted to the wafers or elements **68** may be equally well effected by spring means.

The wafers **68**, in the locked position shown in FIGURE 4, are preferably maintained in spaced relation by a series of short coil springs **73**, **74** interposed between the interfaces of adjacent wafers, the springs being sleeved about one of the retainer guide screws **65**. An elongated spring **75** is disposed about the main shank portion **67** of the screws **65** and biases all of the wafers **68** toward the front (outer) end of the lock. As will be noted from FIGURE 4, the spring **75** mantains the wafers **68** clear of the locking one or area which is disposed rearwardly of the wafers.

Locking action in the embodiment of FIGURES 4 to 6 is achieved by a series of magnetically controlled pins corresponding to the number of wafers employed. As best appreciated from FIGURE 6, the magnetic locking pin assemblies are quite similar to the locking assembly of the prior embodiment.

The lock assemblies are contained within a laterally directed enlargement **80** formed in the housing, which enlargement includes a radially extending cross bore **81** aligned in registry with a complemental cross bore **82** formed in the plug. Each of the cross bores **81** is provided with a follower pin **83** which is pressed across the shear line S—S defined between the plug and the housing by driver springs **84**. The innermost ends **85** of the driver springs are biased against the outer ends of the pins **83**, the outer ends **86** of the pins being pressed against a dovetailed slide or capping member **87** disposed within an undercut slot **88** formed in the enlargement **80**.

Magnetic pins **89** are disposed within bore portions **82** formed in the plug. The pins **89** may include an enlarged head **90** and a reduced inner end portion **91**, the shape of the pins and cross bore conforming generally to each other as in the prior embodiment. The pins **89** are constructed so that the innermost and outermost ends of the pins define magnetic poles. While in FIGURE 6 the inner end of the pin is shown to define a north pole and the outer end a south pole, the polarity of the various locking pins may vary at random (see FIGURE 4, for instance).

Each of the wafers **68** is provided with a laterally directed recess **92**, which recess is filled with a magnetic insert **93**. The magnetic inserts **93** of the wafers are polarized so that the outermost surfaces of the inserts are of like and, hence, repelling relation with respect to the magnetic pins **89** which they are intended to operate. The wafers **68** are provided, in addition, with upwardly extended clearance slots **94**, to permit passage of a key, the clearance slots being free of the grooving defined by the keyway so as to permit vertical relative movement between the wafers and the key.

The device is operated by the insertion of a key **95**. The key **95** may be provided with the usual milling, to define an irregular configuration, and the keyway of the plug, especially at its outermost and innermost ends, may be likewise complementally milled to enable insertion of a proper key and prevent insertion of an improperly milled key.

The key is formed at its upper edge with a series of stepwisely arranged operating shoulders **96**, **97**, **98**, arranged in progressively increasing height when viewed from the tip toward the bow of the key.

The wafers **68** and particularly the uppermost ends **99** of the clearance slots **94**, are coordinated with the shoulders of the key and with each other in similar stepwise fashion so that end **99** of the innermost wafer is lower than the end **100** of the central wafer which, in turn, is lower than the end **101** of the slot of the outermost wafer.

As will be evident from FIGURE 5, the stepwise orientation of the shoulders **96**, **97**, **98** of the key, and ends **99**, **100**, **101** of the wafers is such as to permit the shoulder **96** to pass beneath without engaging the two uppermost wafers A, B but to engage against a side portion of the innermost wafer C. In like manner, the shoulder **97** will pass beneath wafer A and pick up wafer B, and the outermost shoulder **98** of the key will engage only wafer A.

With the continued insertion of the key **95**, the wafers will be carried rearwardly to the interior of the lock and when a proper key is fully inserted, magnetic elements **93** of the wafers will be disposed in precise alignment with the complemental and oppositely polarized inner ends of the magnetic pins **91**. When this position of the wafers is achieved, the magnetic pins **89** will be shifted outwardly, causing the inner ends of the locking pins **83** to be shifted into alignment with the shear line S—S, thus releasing the plug for rotation relative to the housing.

In considering the security of the above described device, it will be observed that an unlocking of the magnetic pins can be achieved only if the key lifts the wafers to the proper extent and also shifts them inwardly to the proper position along the axis of the plug. By this arrangement, requiring critical heightwise and axial alignment of the wafers, an exceedingly high degree of security is achieved.

Preferably, as set forth in connection with the prior embodiment, the forces of the magnetic elements are accurately balanced to permit the exertion of a force sufficient to release the locking pins only when a precise orientation is achieved between the magnets in the wafers and the magnetic pins.

As further noted in connection with the prior embodiment, means may be provided to assure that the magnetic pins are not forced across the shear line and into the housing.

From the foregoing description of two embodiments of magnetic locks, it will become evident that a skilled worker in the art, having the benefits of the teachings hereof, could devise a multiplicity of different forms of locks using magnetic carrier elements shifted by the insertion of keys, without the exercise of invention. For example, the wafers or other magnetic carriers may be mounted for pivotal as well as axial movement about a single support post carried by the lock plug. Similarly, a double bitted key may be used to shift the magnetic carrier elements in opposite directions upon insertion of the key, locking means being provided at opposed portions of the housing.

While the embodiment of FIGURES 4 to 6 has been illustrated in connection with the use of three locking wafers, it will be readily recognized that the invention is by no means restricted to this number.

From the foregoing description, it will be appreciated that there is provided a high security lock apparatus employing magnetic control elements, which lock apparatus is operable by a key not required to contain any magnetic inserts or components.

Optionally, completely to frustrate picking by any mechanical means, it may be desirable to introduce a magnetically inert film or layer within the lock between the magnetic pins and the keyway, to prevent any mechanical contact with the magnetic pins. Such a layer may require the use of stronger magnetic components and result in a slight increase in cost. However, such increase may be justified in particular applications by the additional security afforded.

Having thus described the invention and illustrated its use, what is claimed as new and is desired to be secured by Letters Patent is:

1. A magnetic lock device comprising a housing having a main bore, a cylindrical lock plug rotatable within the bore of said housing, a keyway formed in said plug, a cross bore extending from said housing into said plug, a first pin mounted in said cross bore, means inwardly urging said first pin across the shear line defined between said plug and housing to lock said plug and housing against relative rotation, a second magnetic pin in said cross bore having an outer end engaging the inner end of said first pin, magnet carrier means movably mounted in said plug and having portions intersecting said keyway, a magnet element on said carrier having repelling properties relative to the inner end of said second pin, means biasing said carrier means to a first position wherein said magnet element is displaced from said cross bore, and key means insertible into said keyway for shifting said carrier from said first position to align said magnet portion with said cross bore.

2. A device in accordance with claim 1 wherein said carrier means is shiftable axially of said keyway responsive to the insertion of a key.

3. A device in accordance with claim 1 wherein said carrier means is shiftable transversely of said keyway responsive to the insertion of a key.

4. A device in accordance with claim 1 wherein said carrier means is shifted axially and transversely responsive to the insertion of a key.

5. A device in accordance with claim 1 and including auxiliary locking means extending across said shear line, said key including means for releasing said auxiliary locking means.

6. A device in accordance with claim 1 wherein said carrier member is disposed in proximate spaced relation to the innermost end of said keyway and said spring means urges said carrier toward the outer end of said keyway, said key including carrier engaging portions adjacent the lead end thereof for shifting said carrier axially inwardly to said aligned position responsive to insertion of said key.

7. A device in accordance with claim 5 wherein said carrier member is disposed in proximate spaced relation to the innermost end of said keyway and said spring means urges said carrier toward the outer end of said keyway, said key including carrier engaging portions adjacent the lead end thereof for shifting said carrier axially inwardly to said aligned position responsive to insertion of said key.

8. A magnetic lock device comprising a housing having a main bore, a cylindrical lock plug rotatable within said bore, a keyway formed in said plug, at least two cross bores extending from said housing into said plug, first and second locking means movably mounted in said first and second cross bores, respectively, said locking means

being yieldably urged across the shear line defined between said plug and said housing, first and second magnetic releasing means disposed in said first and second cross bores, respectively, radially inwardly of said locking means, first and second magnetic carrier means movably mounted in said plug and having portions intersecting said keyway, first and second magnetic element means on said first and second carriers, respectively, having repelling properties relative to the radial innermost ends of said first and second magnetic releasing means, respectively, means for yieldably shifting said carrier means to a normal locking position whereat said first and second magnetic element means are displaced from said first and second magnetic release means, and key means for aligning said first and second magnetic elements with said first and second release means, respectively, thereby to shift said locking means to the plug releasing position thereof.

9. A device in accordance with claim 8 wherein the carrier means are shiftable axially of said plug.

10. A device in accordance with claim 8 wherein the carrier means are shiftable transversely of said plug.

11. A device in accordance with claim 8 wherein the carrier means are shiftable transversely and axially of said plug.

12. A device in accordance with claim 8 wherein said means for shifting said carrier means to said locking position comprise other magnetic portions on said carrier means.

13. A device in accordance with claim 8 wherein said first and second cross bores are radially offset one from the other.

14. A device in accordance with claim 13 wherein said cross bores are offset by 180°.

15. A device in accordance with claim 8 wherein said means for yieldably shifting said carrier means comprise a spring member urging said carriers toward the outer end of said plug.

16. A device in accordance with claim 15 and including variable spacer means interposed between said carrier means and yieldably separating said carrier means.

References Cited

UNITED STATES PATENTS

1,093,817	4/1914	Williams	70—421
1,969,012	8/1934	Jacobi	70—360
2,370,800	3/1945	Kind et al.	70—352
3,216,230	11/1965	Falk	70—421
3,420,077	1/1969	Drazin	70—276

MARVIN A. CHAMPION, Primary Examiner

R. L. WOLFE, Assistant Examiner

U.S. Cl. X.R.

70—356, 421