Feb. 12, 1935. W. J. KERNAGHAN 1,991,102

METAL DISPLAY RACK

Filed July 9, 1934

Fig. 1.

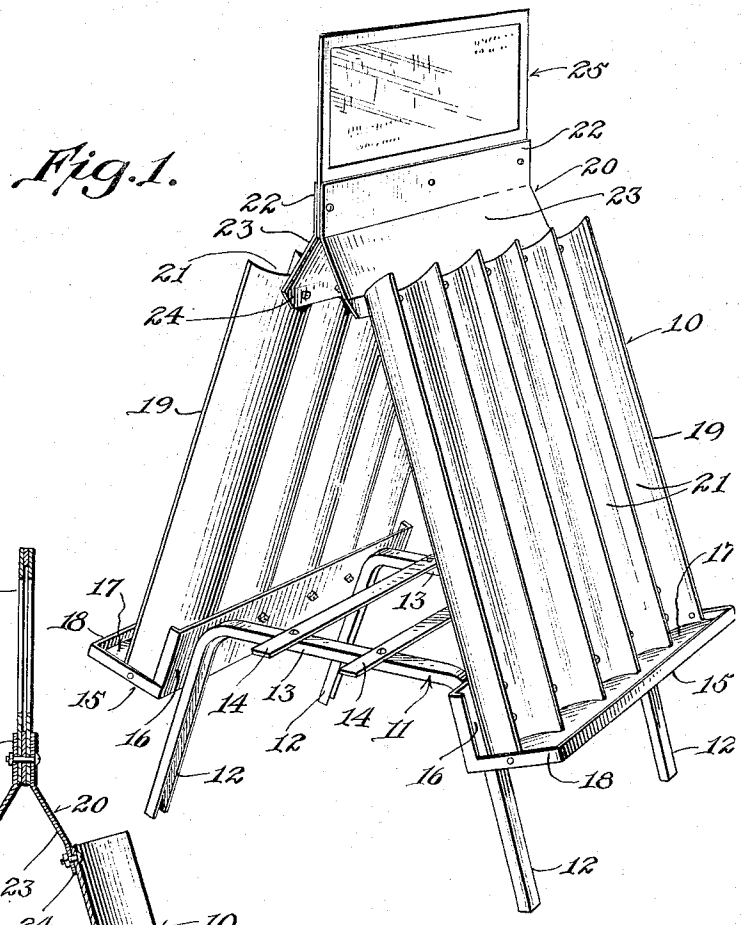

Fig. 2.

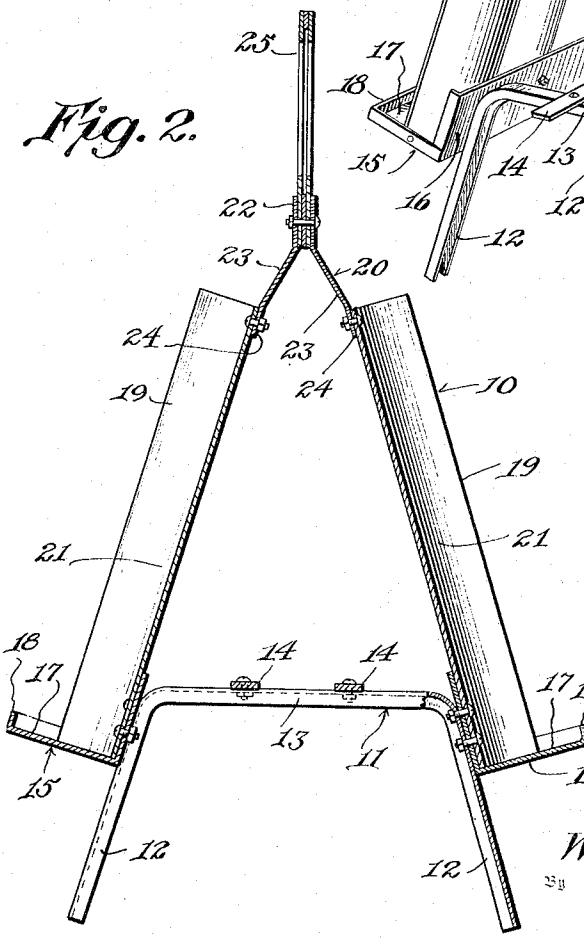

Fig. 3

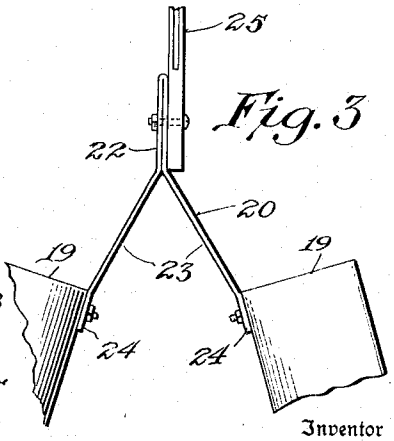

Inventor

William J. Kernaghan

By Charles W. Hill

Attorney

Patented Feb. 12, 1935

1,991,102

UNITED STATES PATENT OFFICE

1,991,102

METAL DISPLAY RACK

William J. Kernaghan, New Orleans, La.

Application July 9, 1934, Serial No. 734,344

3 Claims. (Cl. 211—49)

The invention relates to display racks, and particularly to display easels for the display of cans of motor oils, or other canned goods.

It is an object of the invention to provide a display rack, or easel, of but a few simple and inexpensive parts, but adapted, nevertheless, to the severe service conditions incident to its use in filling stations, garages and the like.

It is also an object of the invention to provide a display rack with the elements comprising the same so disposed that the goods displayed and the advertising matter incident thereto form the major portion of the appearance presented to the observer.

It is also an object of the invention to provide a display rack with means to prevent accidental displacement of the goods displayed thereon but operable to permit easy intentional removal thereof.

Other objects of the invention will become apparent to those skilled in the art from a consideration of the following description, taken in conjunction with the drawing, wherein:

Figure 1 is a perspective view of the rack.

Figure 2 is a vertical sectional view of the rack.

Figure 3 is a vertical elevation view of a modified form of the upper portion of the rack.

In the drawing, the numerals 10 indicate generally a display rack or easel having a base which comprises a pair of bent channel irons 11, each bent to provide oppositely inclined legs 12 and an integral connecting and spacing portion 13. The channel irons 11 are held in assembled spaced relation by a pair of transversely extending and spaced strips 14 secured thereto, and by a pair of tray members 15 secured to the legs 12.

The tray members 15 may be each formed of a single piece of sheet metal bent to provide an upstanding back portion 16, a shelf 17, and an upstanding bounding wall 18.

Means to hold cans of oil, or the like, against accidental displacement but for easy intentional removal thereof comprise a pair of sheet metal side members 19 which are connected at their upper ends to the wings of a saddle-shaped member 20.

The side members 19 may each be formed of a sheet of metal bent or corrugated to define a plurality of vertically extending curved channels 21 adapted to receive cans of lubricating oil, or other canned goods.

It is obvious that the side means 19 may also be formed of a plurality of bent sheets of metal suitably connected to each other.

The saddle member 20 may be formed of a single sheet of metal bent to provide an upstanding portion 22 of double thickness and integral and oppositely extending spaced inclined wings 23, each terminating in a lower bent portion 24 to which the side members 19 are suitably secured. As is shown in Figure 2, the saddle member 20 may be formed of two pieces of metal with an upstanding display board or sign 25 interposed between the upstanding portions 22 thereof, and removably secured thereto.

The inclined and vertical portions of the saddle member are adapted to carry designating indicia or advertising matter thereon.

The side members 19 are, at the lower end thereof, suitably secured to the back 16 of the tray 15, and may rest on the shelf 17.

It will now be evident that cans of oil or the like may be placed in the channels 21, and rest supported on the shelf 17 and the side members 19. Since the cans are held against displacement by the wall 18, by the sides of the member 19 defining the channels 21, and by the inherent effect of gravity because of the inclined position of the members 19, it will be obvious that the display rack is eminently suitable for the severe service conditions in garages, filling stations, and the like, where it is liable to be moved about, and not very gently, when the floors are being cleaned.

Practically all of the appearance that meets the eye of an observer is that presented by oil cans displayed on the rack and the advertising matter thereabove, for the elements of the rack are susbtantially hidden from view.

I am aware that details of construction may be varied, and I, therefore, do not purpose limiting the patent granted hereon otherwise than necessitated by the prior art.

What is claimed is:

1. A display rack comprising a saddle-shaped member having a pair of downwardly and outwardly inclined wings, a pair of corrugated article-receiving members secured at their upper ends to said wings and being positioned in downwardly diverging back-to-back relation to each other, and a supporting base secured to the lower ends of said corrugated members.

2. A display rack comprising a base frame formed of a pair of bent irons providing a plurality of downwardly and outwardly inclined legs, a pair of trays, each secured to and overlying a pair of legs, each of said trays having a back, an outwardly projecting shelf and an

upstanding wall bounding the shelf, a saddle-shaped member having a pair of downwardly and outwardly inclined wings, and a pair of corrugated article-holding members connected at their upper ends to said wings, and entering said trays at their lower ends, said corrugated members being disposed in downwardly diverging back-to-back relation.

3. A display rack comprising a base frame, a pair of spaced and upward converging article-holding members seated at their lower ends on said base frame, means securing the upper ends of said article-holding members in spaced and assembled relation, said means comprising an upwardly extending saddle member having a pair of downwardly and outwardly converging wings secured at their lower ends to the upper ends of said article-holding members.

WILLIAM J. KERNAGHAN.