United States Patent [19]

Franz

[11] **3,793,054**

[45] **Feb. 19, 1974**

[54] **ANGLED CROSSFIRE RINSES**

[75] Inventor: **Helmut Franz,** Pittsburgh, Pa.

[73] Assignee: **PPG Industries, Inc.,** Pittsburgh, Pa.

[22] Filed: **July 6, 1971**

[21] Appl. No.: **159,746**

[52] **U.S. Cl.** ..... **117/47 R,** 117/54, 117/105.3, 117/124 C, 118/73, 118/314, 118/323, 134/15, 134/32, 134/64, 134/83

[51] **Int. Cl.** **B08b 1/02,** C03c 17/14, B08h 3/00

[58] **Field of Search** 117/105.3, 54, 47 R, 66, 124 C; 134/15, 32, 36, 64, 72, 122, 129, 131, 144, 151, 172, 83; 118/73, 314, 323

[56] **References Cited**

UNITED STATES PATENTS

2,815,298	12/1967	Heffley	117/105.3
3,543,775	12/1970	Bodnar	134/64
2,996,406	8/1961	Weinrich	117/105.3
3,674,517	7/1972	Miller	117/124 C

Primary Examiner—William D. Martin
Assistant Examiner—William H. Schmidt
Attorney, Agent, or Firm—Donald Carl Lepiane; E. Kears Pollock

[57] **ABSTRACT**

A reciprocating crossfire set of rinsing means rinses the surface of a glass sheet while maintaining a uniform thickness of rinsing medium in an area on the glass surface where a subsequent spraying operation is to be carried out. The rinsing means are angled obliquely downward, rearward and outward, and rinse water or other medium is supplied at a rate suficient to force excess rinsing medium off the side and the trailing edge of the sheet, rather than being delivered into the spray area or accumulated along its trailing edge portion. The uniform thickness of rinsing medium prepares the substrate for receiving a more uniform transparent metal-boron coating in the spraying operation that follows.

12 Claims, 13 Drawing Figures

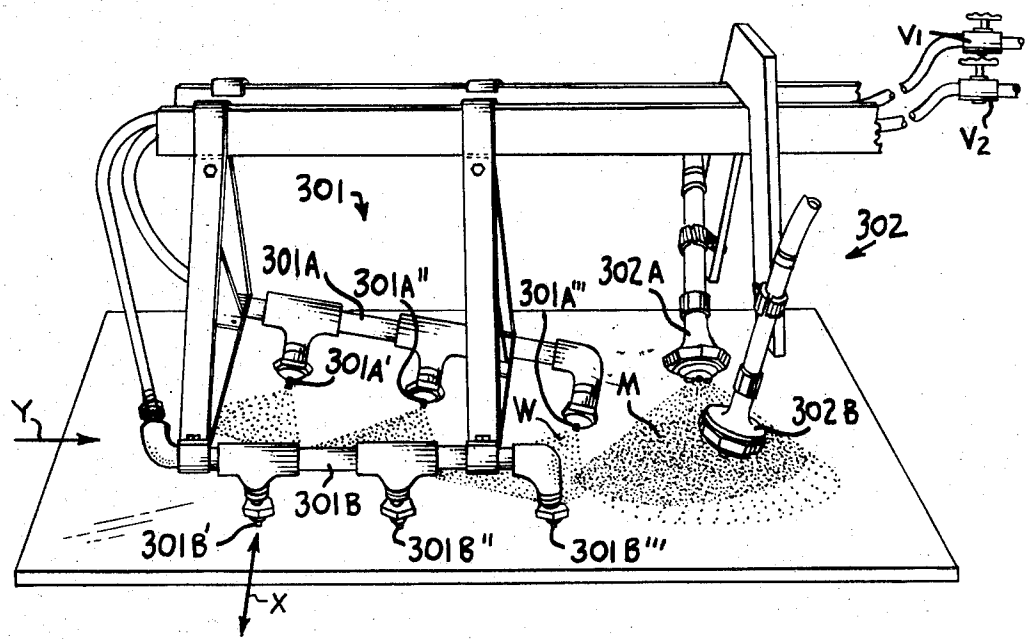

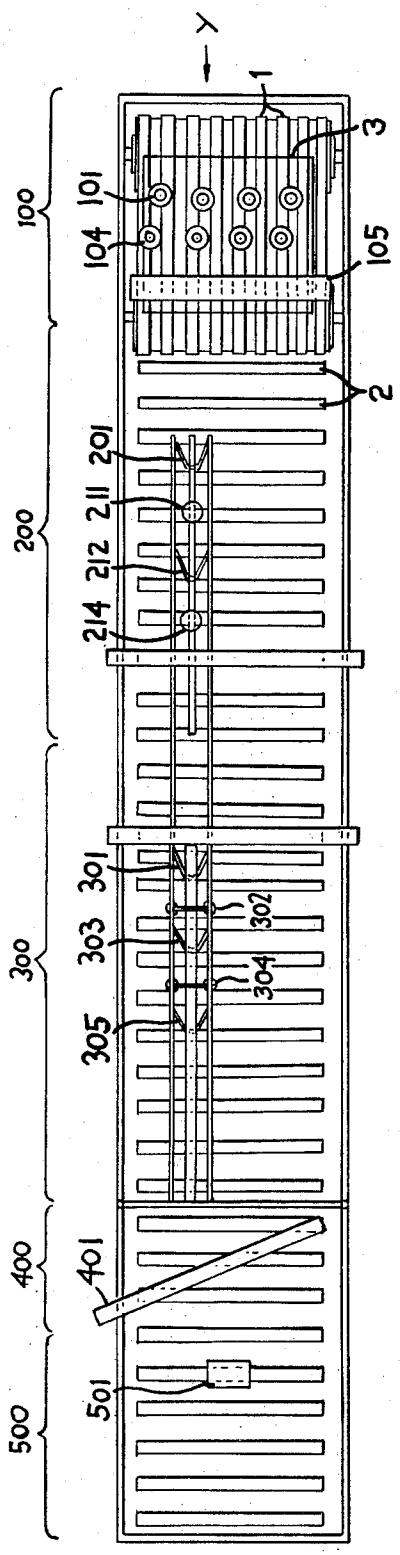

FIG. 1

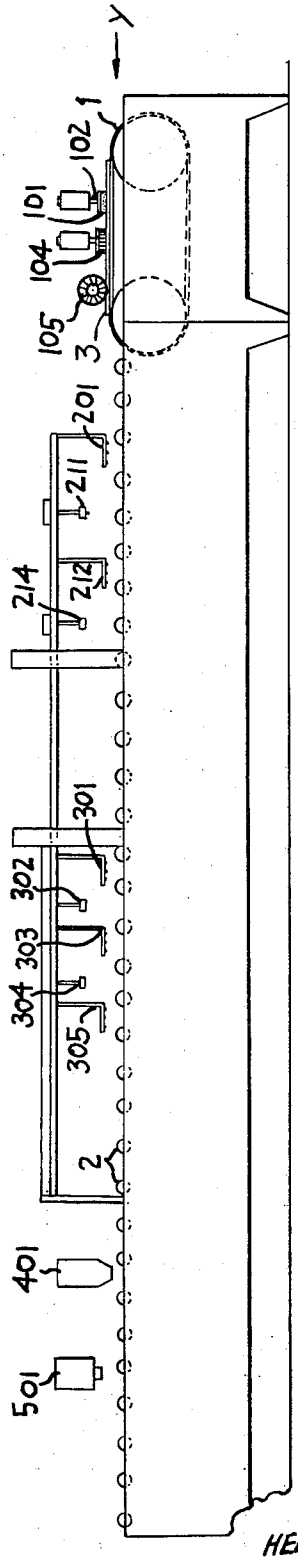

FIG. 2

INVENTOR

HELMUT FRANZ

BY

Cushman, Darby & Cushman

ATTORNEYS

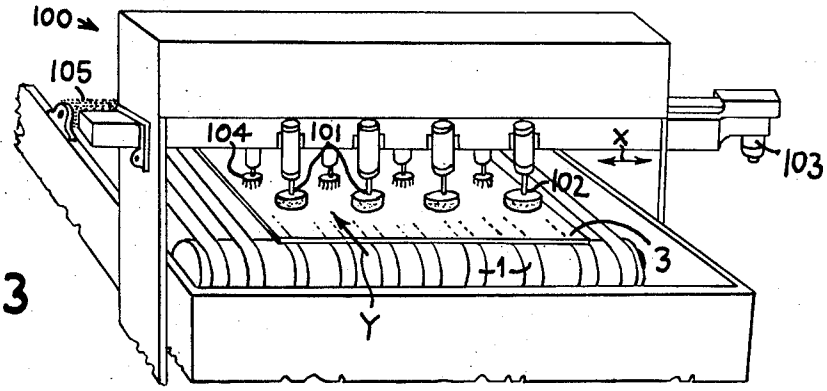

FIG. 3

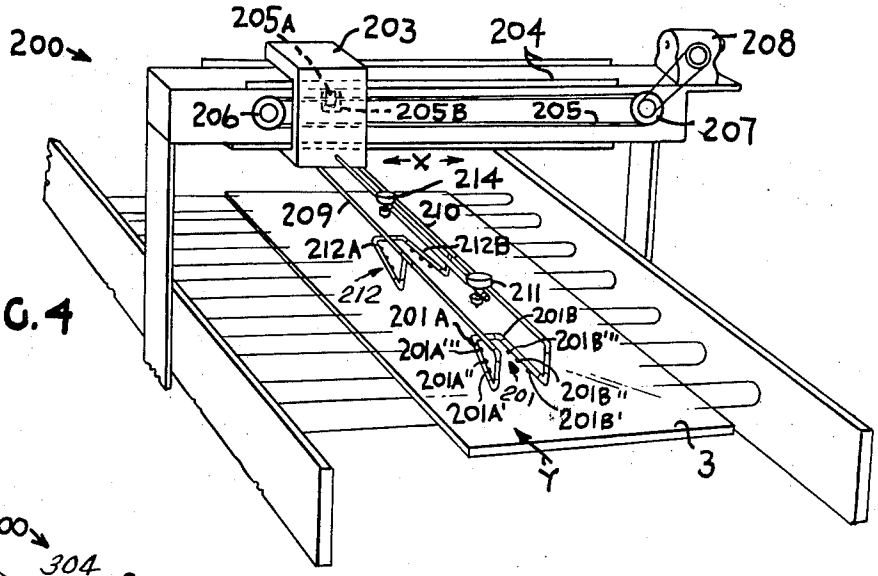

FIG. 4

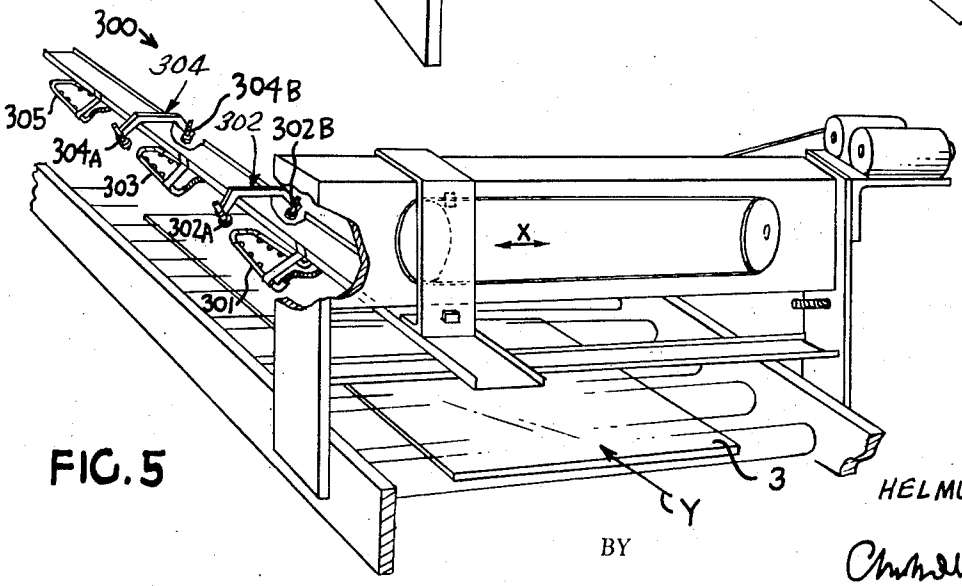

FIG. 5

INVENTOR

HELMUT FRANZ

BY

ATTORNEYS

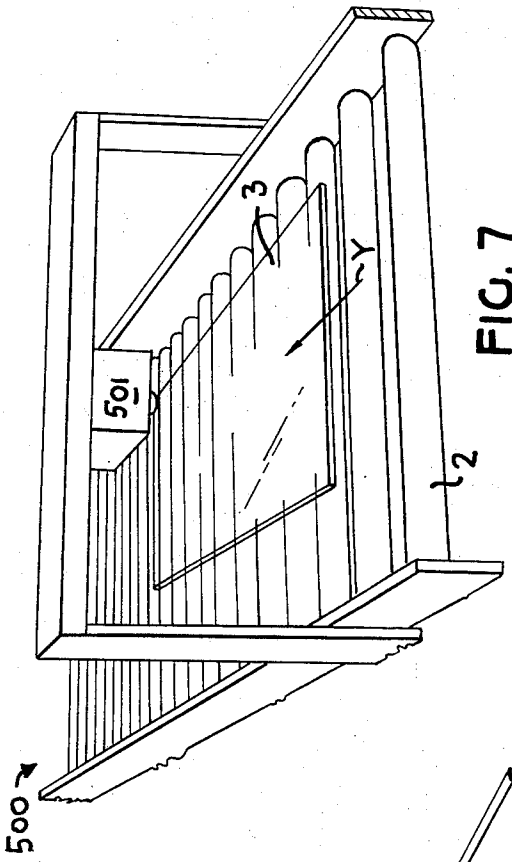

FIG. 7

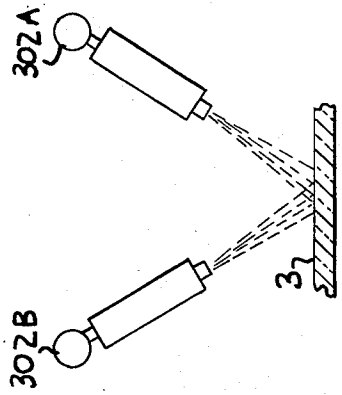

FIG. 10

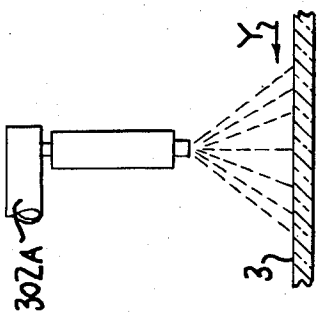

FIG. 9

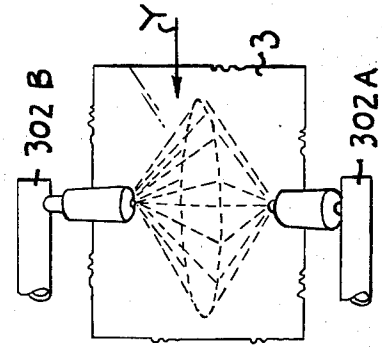

FIG. 8

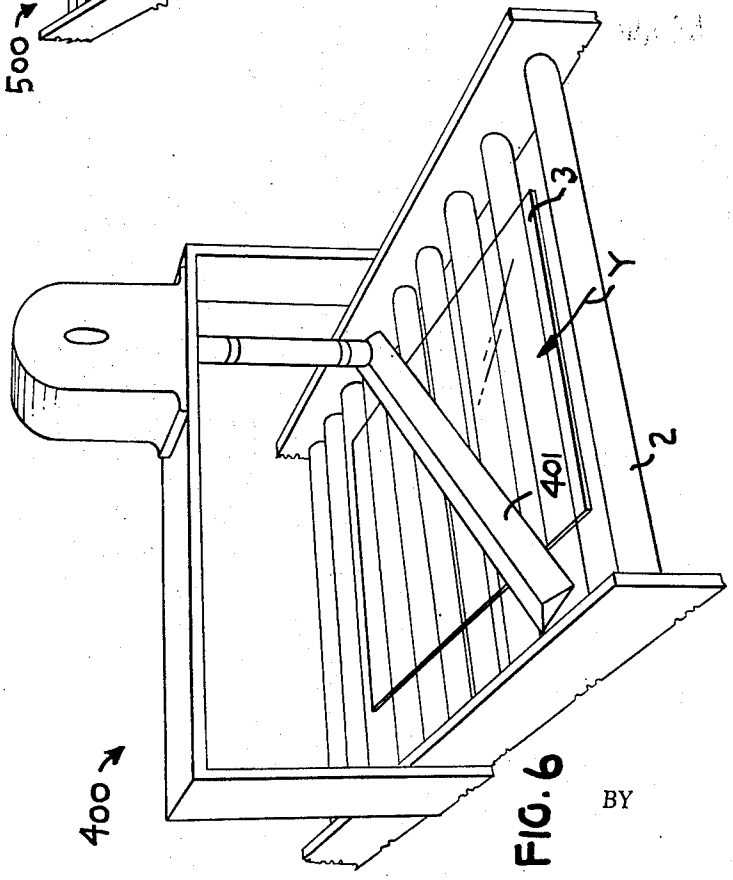

FIG. 6

INVENTOR

HELMUT FRANZ

BY Christie and Spencer

ATTORNEYS

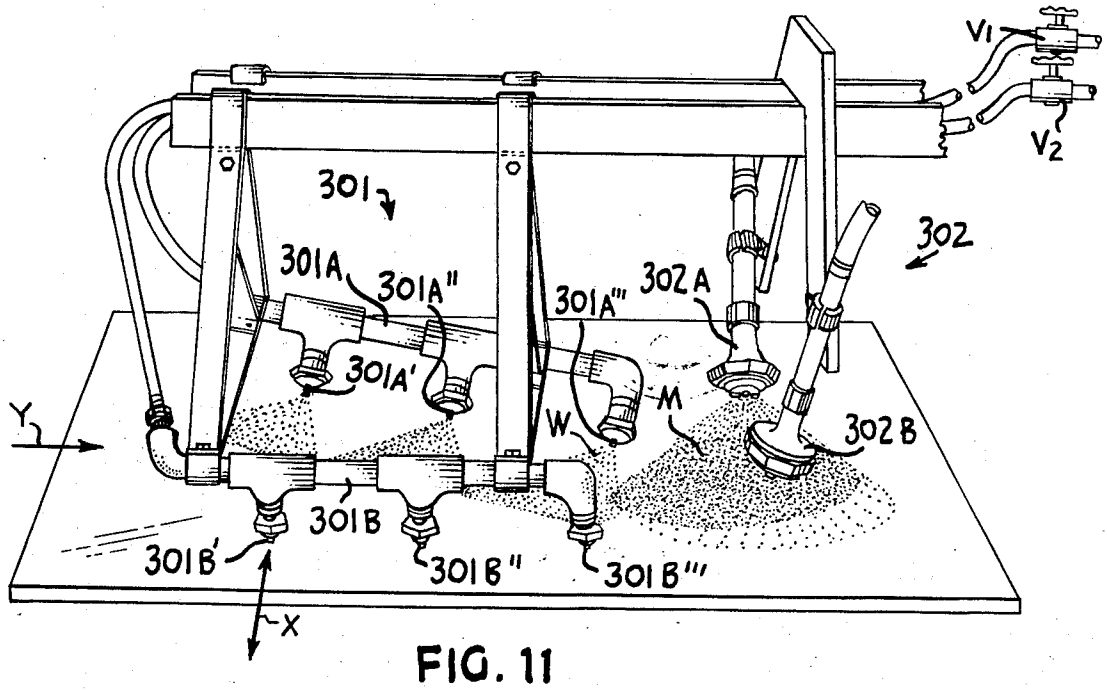

FIG. 11

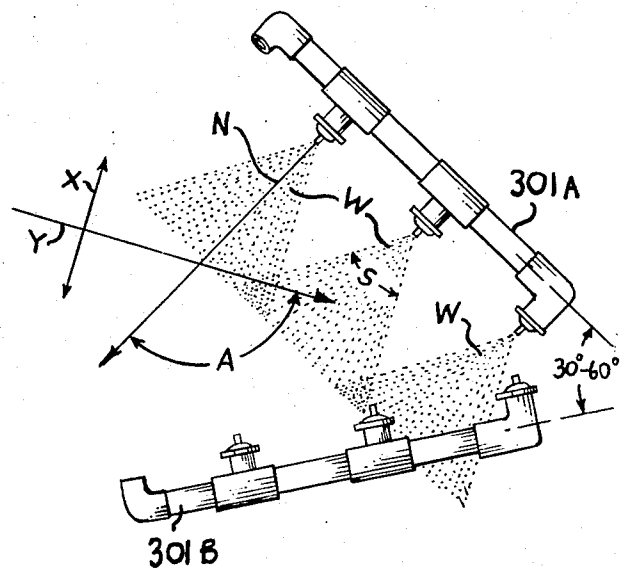

FIG. 12

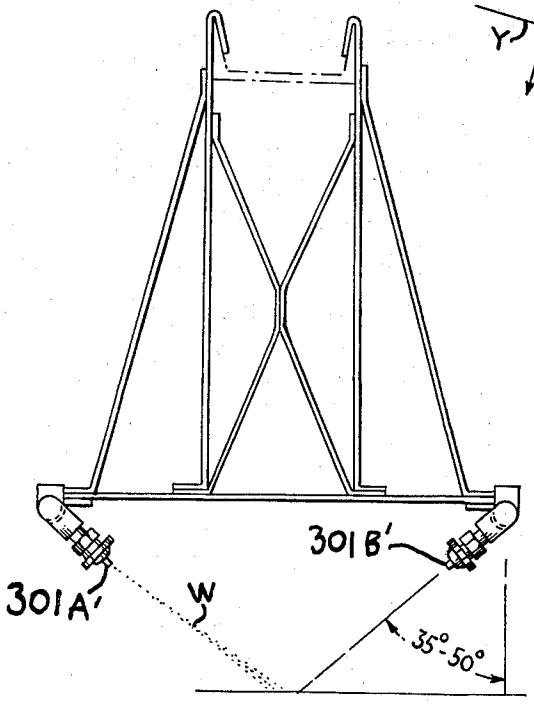

FIG. 13

INVENTOR

HELMUT FRANZ

BY

ATTORNEYS

ANGLED CROSSFIRE RINSES

CROSS REFERENCES TO RELATED PATENTS AND APPLICATIONS

This application is related to U.S. Pat. No. 3,671,291 issued on June 20, 1972 to Richard G. Miller et al., and entitled "Electroless Process for Forming Thin Metal Films." This application is also related to U.S. Pat. No. 3,672,939 issued on June 27, 1972 to Richard G. Miller, and entitled "Electroless Process for Forming Thin Metal Films." This application is also related to U.S. Pat. No. 3,723,158, issued on Mar. 27, 1973 in the name of Richard G. Miller, and entitled "Wet Chemical Method for Producing Transparent Metal Films". This application is also related to U.S. Pat. No. 3,674,517 issued on July 4, 1972 to Richard G. Miller and entitled "Solution for Depositing Transparent Metal Films." This application is also related to U.S. Pat. application Ser. No. 57,575, filed on July 23, 1970 in the name of Richard G. Miller and entitled "Solutions for Depositing Transparent Metal Films," which application has since been abandoned. This application is also related to U.S. Pat. No. 3,723,155, issued on Mar. 27, 1973 to Charles B. Greenberg et al., for "Wet Chemical Method for Producing Transparent Metal Films." This application is also related to U.S. Pat. application Ser. No. 111,904, filed on Feb. 2, 1971, in the name of Helmut Franz et al and entitled "Chemical Filming Solution and Process for Plating Therewith." This application is also related to U.S. Pat. No. 3,738,867, issued June 12, 1973, in the name of Helmut Franz, and entitled "Removal of Metal Containing Deposits from Non-Metallic Substrates."

BACKGROUND OF THE INVENTION

1. Field of the Invention

This invention relates to a method and an apparatus for providing non-conductive transparent substrates with transparent coatings having optical properties of good uniformity, and particularly relates to a glass rinsing operation that avoids sources of non-uniformity of said optical properties.

2. Description of the Prior Art

In the past, transparent metal coated glass articles have been produced by various vapor deposition techniques which generally involve the deposition, from the vapor phase, of substantially pure metals, such as nickel or chromium on a prepared glass substrate. However, while such techniques are generally capable of providing metal films of acceptably uniform thickness and specified visual transparency, commercial films of this type have been observed to possess an undesirably high number of visible pin-holes. Further, this process is expensive and complex. Metal coated metallic and non-metallic articles have been produced by various well-known electroless or chemical plating techniques. These techniques generally involve the immersion of a metallic article or a sensitized non-metallic article into a suitable electroless plating bath comprising an aqueous medium having dissolved therein a metal salt and an appropriate reducing agent, whereupon a metal film is deposited upon the immersed article by an autocatalytic mechanism.

The electroless process is an old and established one. For example, Brenner and Riddell disclosed in 1944 that an opaque coating of nickel could be autocatalytically deposited upon metallic substrates by immersing the substrates into a nickel salt solution containing sodium hypophosphite. U.S. Pat. Nos. 2,532,283 and 2,532,284 were issued to Brenner and Riddell upon their discoveries. The use of sodium hypophosphite as the reducing agent results in deposits which are not pure metal, but which contain about 2 to 10 percent elemental phosphorous by weight. In this connection, it is known that the presence of phosphorous in a deposited nickel film affects certain of the film characteristics, including its dominant wave lengths, infrared absorption characteristics, excitation purity and electroconductivity. In addition, and for reasons not wholly understood, it has been found that the uniformity of deposited nickel-phosphorous films generally decreases rapidly with increased thickness when the thickness of the coated glass substrates is greater than about three-sixteenths of an inch.

Other electroless immersion plating processes involve the use of boron-containing reducing agents which are effective at room temperature. U.S. Pat. Nos. 2,968,578, 3,140,188, 3,096,182 and 3,045,334 are representative of improved electroless plating processes of this type. U.S. Pat. No. 2,956,600, issued to Carlson et al., describes a spraying process wherein two separate solutions are sprayed upon substrates to form nickel coatings. This process uses sodium hydrosulfite and sodium hypophosphite as a reducing agent.

To a large extent the prior art has been concerned with production of opaque coatings by electroless coating, although it is understood that the assignee of U.S. Pat. No. 2,702,253 produces a glass plate having a transparent nickel coating possibly by the process therein disclosed. The problem of producing transparent glass or like articles is much more difficult because relatively minute variations in thickness are readily visible to the naked eye as unsightly defects. Other variations in such coatings can provide streaks with a glass region appearing almost opaque due to reflection of light in an otherwise transparent glass plate.

Many solutions suggested by the prior art develop a coating of gradually increasing thickness well beyond thicknesses which are opaque. The production of uniform transparent films with such solutions is especially difficult.

U.S. Pat. No. 3,723,158, issued, in the name of Richard G. Miller, teaches a method whereby transparent substrates such as glass are provided with a uniform transparent coating by contacting the glass simultaneously with a mixture of a reducible metal salt in a solution and a reducing agent, which mixture becomes rapidly depleted of its film forming capacity before the resulting coating becomes opaque. This produces a uniform coating at a rate which is relatively rapid and then relatively slower and which effectively ceases to produce coating while the coating remains transparent. According to said application, it has been found that by using such mixtures and discontinuing the contact therewith after the rate of deposition of coating has reached the slower rate, transparent films of improved uniformity with few pin-holes can be achieved. The application further states that coatings of the best uniformity may be obtained even with large plates having 4 or more square feet of surface when the coating is applied by separately spraying a solution of reducing agent and a solution of the reducible metal salt on the glass plate preferably while the major surfaces thereof

are in a horizontal or substantially horizontal plane. The process has been found to be effective over a broad temperature range for coating any of the so-called catalytic metal substrates or non-catalytic substrates sensitized in a conventional manner to promote deposition of continuous, adherent transparent metal films. An advantage of the process is that it will deposit highly uniform transparent films when performed at about room temperature, i.e., from about 20° Centigrade to about 30° Centigrade. The application further states that in order to insure that each of a plurality of substrates is provided with a coating that exhibits substantially the same physical and chemical characteristics, it is advantageous that the process temperature be held constant to within about ± 1° Centigrade, for example, over 100 substrates or over 1,000 square feet of substrates, or the like. Best uniformity and appearance of transparent films is achieved when films are deposited to a thickness having a luminous transmission of about 35 to 40 percent or less, and when the films comprise nickel-boron, cobalt-boron, iron-boron, and the like. Films comprising mixtures of boron and nickel, cobalt and/or iron may also be provided. In all such films, the boron is present in a minor amount (rarely exceeding about 15 percent by weight and normally between about 2 and 7 percent by weight) while the metal (nickel, cobalt and/or iron) is present in preponderant amounts (rarely less than 85 percent by weight and normally between about 93 and 98 percent by weight).

The transparent substrates obtained in accordance with the last-mentioned process may be employed, for example, as transparent windows or outside walls in a building such as a skyscraper or other multistory structure. These substrates may be especially advantageously employed as one of the plates which make up multiglazed units as described in the previously mentioned U.S. Pat. application Ser. No. 57,575 now abandoned. It will be understood that uniformity of coating in such uses is especially important because otherwise the reflected color portions of the building differs sharply from that of other portions, thus distracting from its appearance.

To generalize, the prior art teaches a process whereby glass plates are conveyed along an article movement path through a sequence of rinse and spray stations. After a plate leaves a rinse station, it is normally covered with a layer of water. When the plate enters a spray station, this layer of water is normally pushed toward the trailing edge of the plate and tends to accumulate toward the trailing edge. As more water accumulates at the trailing edge, the water tends to flow back into the spray zone. The problem is especially severe at the trailing edge where water is retained by the edge of the plate. After reaching equilibrium thickness at the trailing edge, some of the water flows back into the spraying zone so that the glass plate is sprayed while it is covered with one or more puddles of water of non-uniform thickness. As a result, there is an uneven dilution of the sprayed-on solutions in the sensitizing and coating stations, and this causes the coating on the plate to vary in thickness, in absorption and in reflectance. This is extremely pronounced adjacent to the trailing edge of the plate. In addition, a finger-like front of the sprayed-on solution forms between each spray station and each rinse station which manifests itself in streaks in the direction of travel of the plate. In addition, splashing in the sensitized area causes streaks and mottle in the coating. The prior art recognized the existence of the problem of non-uniformity of coating, but failed to associate its relation to an inferior rinsing technique.

In U.S. Pat. application Ser. No. 159,747 filed on July 6, 1971, in the name of the present inventor, there is disclosed a solution to this problem. In the said mentioned application, there is suggested the use of a squeegee/shield combination ahead of the spray station to insure that there are no puddles or finger-like fronts of rinse water at a spray station. The squeegee is made of soft rubber or plastic and it prevents the formation of finger-like fronts and also protects the glass surface from splashing and defects associated with splashing. While this is an advance over the prior art, the squeegee is not an ideal solution to the problem in that there is always a chance of damaging the sensitization and activation layers when solid particles that may become trapped between the glass and the squeegee or in the squeegee material itself abrade said layers.

SUMMARY OF THE INVENTION

According to the present invention, the above-mentioned problems are solved by installing reciprocating angled crossfire rinse sets at the rinse stations downstream of the spray stations. The angled crossfire rinse sets have pipes with nozzles that are obliquely angled to impart rinsing medium at an oblique angle both with respect to an article movement path and a reciprocating path of said rinse sets to provide a component of motion parallel to the upper glass surface of sufficient magnitude to avoid puddling or other non-uniform thickness variations in the rinse medium on the glass surface. The rinse sets may be mounted on the same boom as the spray guns to reciprocate in unison, according to the preferred embodiment.

As used in the application, the phrase "article movement path" refers to the path formed by the relative movement of a work piece with respect to a rinse set and/or a spray set. The phrase includes both the situation where the rinse set is stationary relative to said path and the work piece moves past the rinse set, and where the work piece is stationary relative to said path and the rinse set moves past the work piece. The direction of the "article movement path" is such that the trailing edge of the glass sheet is the last increment of glass to be rinsed. The "article movement path" is defined in a manner independent of the presence or absence of any reciprocating movement of the rinse set.

The direction of reciprocating movement of the rinse set as it traverses the work piece is referred to in this application as the "reciprocating path" or the "rinse set reciprocating path." This latter path is transverse to and is defined in a manner independent of the presence or absence of the article movement path.

The term "nozzle axis", as used in this application, refers to the direction in which the rinse set nozzles extend. This direction is defined in a manner independent of the presence or absence of either or both the article movement path and the rinse set reciprocating path.

It is important to note that the relative movement of the glass sheet with respect to any particular rinse nozzle is very complex, insofar as direction is concerned, in that the glass sheet travels in a first direction along an article movement path in one plane while the rinse

nozzle travels in a transverse direction along a reciprocating path in another plane. It is for this reason that this application describes each movement independently.

The glass sheet moves along the article movement path in a given plane, usually horizontal for the preferred embodiment. The crossfire rinse set travels along the reciprocating axis in a plane that is parallel to the given plane but spaced therefrom in the preferred embodiment.

In a preferred embodiment, each rinse set contains two pipes and each pipe contains a plurality of nozzles. Each nozzle emits a fan-like apray having an apex angle of about 50° to about 75°, and preferably about 60°. The pipes are positioned so that an angle formed between the pipes of each set is between about 15° and about 100°, and preferably between about 30° and about 60°. Nozzles extend perpendicularly from each pipe in such an arrangement that there is preferably an angle ranging from about 105° to about 120° formed between an axis subtended by each nozzle axis in the plane of the article movement path and the axis of the article movement path. If the angle between the nozzle axis and the article movement path is smaller than the preferred range, too much rinse water is delivered into the spray area. If the nozzle angle is larger than the preferred range, a heavy build-up of liquids at the trailing edge of the plate results. The present invention associates this heavy buildup with non-uniform coating. Therefore, it proposes to avoid this build-up by sweeping the water or spent solution over the side of the plate.

The crossfire rinse nozzles should be installed so that they are offset from the vertical axis by about 35° to about 50°. If this angle is less than about 35°, it is possible to damage a previous sensitization layer or a previous metal-boron coating due to the stronger impact of the rinse. In addition, smaller angles also provide a minimized sweeping action and this is undesirable. If this angle is greater than about 50°, the rinse becomes more superficial and less effective.

Broadly, the invention includes moving a transparent substrate along an article movement path in a given plane, usually horizontal, while a rinse set is moved along a reciprocating axis transverse to the article movement path in a plane parallel to the given plane and spaced therefrom. Each nozzle axis extends downwardly, rearwardly and outwardly so that it forms an oblique angle with the article movement path, the reciprocating axis and an axis perpendicular to the given plane (a vertical axis if the given plane is horizontal).

According to the present invention, the presence of excessive or uneven amounts of rinsing medium in the spray area is avoided while the main rinsing action still acts to move the water layer or the spent solution together with splashed material over the side and the trailing edge of the plate. This prevents the formation of finger-like fronts ahead of the sprays.

The distance between an angled crossfire rinse set and a subsequent spray gun depends upon the shape of the spray. Ideally, the edge of the rinse fan should just touch the edge of the spray fan. Since it is impractical to work with this precision, the edge of the spray fan is normally adjusted so that it slightly overlaps the edge of the rinse fan. This does not harm the quality of the coating produced.

Coated glass, made in accordance with the present invention, is capable of inhibiting transfer of radiant heat such as that from the sun's rays by the light reflectance and absorption of the film and the fact that it permits transmittance of less than 35 to 40 percent of visible light from sunlight. Panels having light transmittance of 5 to 25 percent are especially useful in warm to temperate climates such as the United States. In other climates such as Northern Europe, panels of greater transmittance are preferred.

The color of the panels is dependent upon the metal which is reduced. Especially attractive nickel-boron and like metal-boron coatings which have a neutral color reflecting and passing essentially white light are provided according to this invention. Cobalt coatings are blue while iron coatings are brown. Other colors can be obtained by producing mixtures of these coatings.

The nickel-boron and metal-boron compounds herein contemplated are usually electroconductive. Thus, these films may be used as heating elements. For example, in the double-glazed panel comprising two-spaced glass panels enclosed by a glass, metal or organic sealing around the edge of the panel, one such panel may be coated on its interior side by the process of this invention. By applying an electromotive force across the coating, heat may be generated in the panel, thus minimizing or preventing substantial heat loss from the interior of the building in which such panels are mounted.

Coatings having one or more of the desirable properties set forth above are effectively produced according to this invention by spraying, as hereinafter disclosed in greater detail. Such a process is especially valuable in producing uniform coatings on large articles such as plates of glass or other substrates having one dimension in excess of 3 feet, with the other being in excess of 1.5 feet, for example, panels of 3 feet by 6 feet or larger.

Immersion processes have serious disadvantages. These disadvantages are especially acute where transparent coatings are desired since, for example, the composition of the plating bath changes during use, thereby requiring frequent chemical analysis and addition of materials to maintain a constant bath composition. If a constant bath composition is not maintained, the metal films formed thereon will not be uniform. In this latter connection, it should be appreciated that contamination of a bath composition, which may be caused, for example, by an inadvertent admixture therewith of the solutions employed to activate the glass being coated, or necessitate a complete shut down of the process and a renewal of the bath. Furthermore, immersion processes are not especially adaptable to forming transparent films inasmuch as the rate of deposition is difficult to control. Thus, it is relatively common for a heavier coating to be deposited on that portion of the substrate which is first to enter and last to leave the plating bath.

Spraying a coating avoided the tapered coating thickness associated with dip coating in a plating bath. However, prior to the present invention, the non-uniformity of appearance of transparent coatings in some frequency made it necessary to improve the coating operation.

DESCRIPTION OF THE DRAWINGS

A complete understanding of the invention may be obtained from the foregoing recital of the prior art and following description of an illustrative embodiment of the present invention, taken together with the appended drawings, in which:

FIG. 1 is a diagrammatic top plan view, with portions removed for the sake of clarity, of an apparatus suitable for carrying out the process of the present invention on a continual basis;

FIG. 2 is a diagrammatic front elevation of the apparatus of FIG. 1;

FIG. 3 is a diagrammatic partial perspective view of a glass loading and cleaning section of the apparatus of FIG. 1;

FIG. 4 is a diagrammatic partial perspective view of a sensitizing and activating section of the apparatus of FIG. 1;

FIG. 5 is a diagrammatic partial perspective view of a metal-boron deposition section of the apparatus of FIG. 1;

FIG. 6 is a diagrammatic partial perspective view of a drying section in the apparatus of FIG. 1;

FIG. 7 is a diagrammatic partial perspective view of a film density measuring and unloading section included in the apparatus of FIG. 1;

FIG. 8 is a diagrammatic top plane view of a metal solution-reducing solution dispensing spray gun set of a metal-boron deposition coating section of the apparatus of FIG. 1, illustrating the disposition of spray guns in said set relative to each other and to an advancing glass substrate, and illustrating a fan-shaped pattern assumed by the respective solutions being sprayed;

FIG. 9 is a diagrammatic side elevational view of the coating apparatus illustrated in FIG. 8;

FIG. 10 is a diagrammatic front elevational view of the apparatus illustrated in FIG. 8;

FIG. 11 is a perspective view showing the details of an angled crossfire rinse gun set and a metal-boron spray gun set;

FIG. 12 is a top plan view, with portions removed for the sake of clarity, of the rinse gun set of FIG. 11; and

FIG. 13 is an end elevational view, with portions removed for the sake of clarity, of the rinse gun set illustrated in FIG. 11.

DESCRIPTION OF THE PREFERRED EMBODIMENT

Referring to the drawings, there is shown one embodiment of an apparatus suitable for coating a monolithic substrate, such as a glass plate, with a transparent metal and boron-containing film of superior uniformity of film appearance in accordance with the present invention. As shown, the apparatus comprises five basic units or sections, which are designated a glass loading and cleaning section (section **100**), a glass sensitizing and activating section (section **200**), a metal-boron coating composition deposition section (section **300**), a glass drying section (section **400**) and a film density measuring and glass unloading section (section **500**). The apparatus also comprises a conveyor means including a plurality of belts **1** in section **100** and rollers **2** in sections **200, 300, 400** and **500** for carrying and advancing glass plates **3** (FIGS. **1** to **7**) past the various sections **100** to **500** in the directions illustrated by the arrows Y. As explained below, the belts **1** and the rollers **2** are rotated by conventional means (not shown) so as to advance the plates **3** at a rate of from about 0.5 to about 7 feet per minute, and preferably from about 3 to about 6 feet per minute.

During continuous operation, a plurality of glass plates **3** are loaded onto the belts **1**, so that the belts advance the plates into and through section **100** of the apparatus. Referring to FIGS. **1, 2** and **3**, a plurality of rotating discs or blocks **101** gently abrade the uppermost surface of each plate, preferably with a mixture of cerium oxide or red rouge and water, to loosen and remove any dirt therefrom. This blocking operation is preferably carried out with cattle hair felt blocks having a diameter of from about 4 to about 12 inches. Each of the blocks is mounted on a shaft **102** which is rotated by a suitable motor **103** (see FIG. **3**) and gear means (not shown) at a rate of from about 200 to about 600 revolutions per minute. In the preferred embodiment, the blocks are rotated at about 300 to about 500 revolutions per minute and are oscillated, for example, a distance of about 2 to 4 inches in a direction transverse to the direction Y of the advancing plate to insure that the entire uppermost surface of the plate is blocked. While still in section **100**, each plate advances beneath a plurality of rotary cup brushes **104** that wash the surface of the plate with tap water. The brushes **104**, which may have nylon bristles or the like, are generally rotated at the same rate as the blockers **101**, and are preferably oscillated in the same manner as well. Each plate finally advances beneath a rotary cylinder brush **105** disposed across the advancing plate. The brush **105** may comprise nylon bristles or the like which contact the plate and complete the cleaning thereof. The brush is generally rotated at about 300 to about 400 revolutions per minute. Both the rotary cup brushes **104** and the rotary cylinder brush **105** may be driven by conventional means such as motors (not shown) that may be similar to the motor **103**.

Each plate **3** then enters into and passes through section **200** of the apparatus, wherein the surface thereof is sensitized and then activated. As illustrated in FIGS. **1** and **2**, and more particularly in FIG. **4**, the plate is rinsed, preferably with demineralized water, as it enters section **200** to remove any traces of cerium oxide, red rouge, tap water or any other undesirable matter carried over from section **100**. In the past, the rinse has been performed by one of several available means. For example, U.S. Pat. No. 3,723,158, suggests that the plate may be rinsed by reciprocating a water spray gun transversely of the advancing plate.

According to the present invention, the rinse is performed by an angled crossfire technique. As illustrated schematically in FIGS. **1, 2** and **4**, an angled crossfire rinse set **201** comprises a mutually opposed pair of pipes **201A** and **201B** supported from a carriage **203**. The latter reciprocates transversely of the plate **3** on transversely extending, horizontal tracks **204** on the rinse set reciprocating axis X at a rate of between about 25 and 70 single passes per minute, and preferably between about 45 and 60 single passes per minute. The carriage **203** is driven by a chain or belt **205** that runs over a pair of pulleys **206** and **207** arranged at the opposite ends of the track **204**. A motor **208** drives the chain **205** while a connection **205A** between the chain and the carriage slides up and down in a vertical groove **205B** on the carriage as the connection moves around

the pulleys. The drive construction is similar to that shown in Bramsen et al., U.S. Pat. No. 2,246,502. During the reciprocating motion of the carriage **203**, demineralized water is fed alternately to the pipes **201A** and **201B** in such a program that water is sprayed only from nozzles **201A'**, **201A''** and **201A'''** when the carriage is moving from left to right in FIG. **4**, and only from nozzles **201B'**, **201B''** and **201B'''** when the carriage is moving in the opposite direction. The pipes **201A** and **201B** may be supplied with water through lines **209** and **210**, respectively, by any suitable means. The pipes are advantageously operated at pressures between about 25 and 80 pounds per square inch, preferably between about 25 and 45 pounds per square inch, and at flow rates of about 500 to about 600 milliliters per minute per pipe.

Referring to FIG. **11**, there is shown a perspective view showing the details of the angled crossfire rinse apparatus according to the present invention. FIG. **11** shows a rinse set **301** comprising pipes **301A** and **301B** with nozzles **301A'**, **301A''** and **301A'''**, and **301B'**, **301B''** and **301B'''**, respectively, and a spray gun set **302**, comprising a nozzle **302A** for dispensing a metal-containing solution and an opposed nozzle **302B** for simultaneously dispensing a reducing solution. Rinse set **301** is identical to all of the other rinse sets disclosed herein, including set **201**. Rinse water is applied to the glass surface, first by the nozzles **301A'**, **301A''** and **301A'''** as the rinse set **301** reciprocates along the rinse set reciprocating path X toward a first side of the glass piece (shown in FIG. **11**), and then, by nozzles **301B'**, **301B''** and **301B'''** as rinse set **301** travels along the rinse set reciprocating axis X toward the other side of the glass piece (not shown). In each case, the nozzles discharge rinse water obliquely downward, rearward and outward, and rinse water is swept off of the side and the trailing edge of the sheet, rather than being delivered into the spray area or accumulated along its trailing edge portion. This leaves a uniform water film beneath spray gun set **302** and this is most desirable in order to obtain a uniform metal-boron coating.

There are many commerically available control means to alternate the flow between pipe **301A** and pipe **301B**. Valves V_1 and V_2 are illustrated as an example of suitable control means, either automatic or manual, that become apparent to one skilled in the art.

FIG. **12** is a top view of the rinse set of FIG. **11** illustrating an important feature of the preferred embodiment of the present invention. The fan-shaped spray W from each rinse nozzle, as viewed in the top view, extends for an angle S of about 50° to about 75°, and preferably about 60°. The pipes **301A** and **301B** are positioned symmetrically about article movement path Y so that the angle formed between the pipes of each set is between about 15° and about 100°, and preferably between about 30° and about 60°. The nozzles extend perpendicularly from each pipe so that there is preferably an angle A ranging from about 105° to about 120° formed between the axis of the article movement path Y in the direction of article movement and each nozzle axis N in the direction of water flow subtended on the horizontal plane of the article movement path axis Y. If angle A is larger than the preferred range and spray-fan angle S remains constant, there is insufficient sideward component of water flow toward the glass side edges and too much rinse water remains on the glass surface when the latter is delivered into the spray area. If angle A is smaller than the preferred range and angle S remains constant, there is insufficient rearward component of water flow toward the trailing edge of the glass and a heavy build-up of liquids at the trailing edge of the plate results. In any case, it is important to note that the size of angle A should be directly related to the size of angle S. For example, if angle A is 120° and angle S is 60°, there will be no component of motion of the spray from spray-fan W extending in the positive Y direction of glass movement toward spray-fan M (See FIG. **11**). This orientation eliminates puddles of rinse water in the spraying area. However, if one increases angle S, angle A must also be increased to insure that little, and preferably no component of motion of the spray from spray-fan W is directed towards spray-fan M. To state it another way, angle A must be at least 90° plus approximately one-half of angle S to insure that any flow of rinsing medium directed toward the spray gun set is minimized and preferably eliminated.

The intensity of spray W is generally not as great at the edges as it is at the center of the spray. This possibly explains why the final coating is not damaged when approximately 10° or 15° of spray W is directed toward spray M.

It is also noted that the nozzles in each set dispense rinse water simultaneously in paths parallel to one another from origins disposed obliquely rearward and at a greater distance from the side edge approached by the pipe during the portion of its reciprocation cycle that it dispenses rinse water. This arrangement enables each successive obliquely rearward nozzle to reinforce the sweeping action of the rinse water both in a sideward and a rearward direction. This feature reduces the likelihood of stagnant pools of excess water remaining on the upper surface of the treated articles.

Referring to FIG. **13**, there is shown a partial end view of the rinse set, illustrating nozzles **301A'** and **301B'**. This figure points out another important feature of the preferred embodiment of the present invention. The rinse nozzles should be installed so that they are offset from the vertical axis by about 35° to about 50°. If the rinse nozzle is orientated at an angle less than 35°, it is possible to damage a previously applied sensitization layer or activation layer, or even a coating layer, due to the stronger impact of the rinse. In addition, if the rinse nozzle is orientated at an angle less than 35° with the vertical, the desired sweeping action is minimized. If this angle becomes too large (greater than about 50°), the rinse becomes more superficial and less effective.

After undergoing an initial rinse with demineralized water, the plate advances beneath a reciprocating gun **211** (See FIG. **4**) which sprays a dilute solution of stannous chloride on the clean surface. The stannous chloride solution may comprise any of the formulations known in the art as being capable of sensitizing non-conductive substrates to metal deposition. HOwever, a preferred formulation comprises from about 0.02 to about 1.0 gram of stannous chloride per liter of solution, together with a small amount of hydrochloric acid. Such a solution may be prepared, for example, by mixing about 20 grams of stannous chloride and 2 to 3 milliliters of concentrated hydrochloric acid (**12** N) in enough demineralized water to form 1 gallon of stock concentrate, and then diluting each part of the concentrate with about 19 parts of demineralized water. In a preferred embodiment, about one part of the above-

described concentrate is injected into a stream comprising about 19 parts of demineralized water, whereafter the combined stream is mixed with air at about 60 to about 80 pounds per square inch, and sprayed through the gun **211** in a highly atomized state at a rate of about 500 to about 700 milliliters per minute.

As illustrated in FIG. **4**, the stannous chloride composition dispensing spray gun **211** is supported from the same reciprocating carriage **203** that supports the initial rinse set **201**. In addition, an intermediate rinse set **212** comprising pipes **212A** and **212B** and a palladium chloride composition dispensing spray gun **214** may also be supported from carriage **203**.

As the plate **3** continues to advance, it passes under the intermediate or second angled crossfire rinse set **212** having pipes **212A** and **212B** with nozzles that operate similarly to those described above in connection with gun set **201**.

The sheet **3** then passes under the gun **214** which sprays an atomized mixture of air and dilute palladium chloride on the now sensitized surface so as to activate (or super-sensitize) the surface for the ensuing metal-boron deposition. As is the case with the stannous chloride solution, the palladium chloride may comprise any of the well-known formulations that are suitable for activating a previously sensitized substrate. However, a formulation comprising from about 0.005 to about 1.0 gram of palladium chloride per liter of solution, together with a small amount of hydrochloric acid, is preferred. One such formulation may be prepared by mixing about **2** grams of palladium chloride and 2 to 3 milliliters of concentrated hydrochloric acid with a sufficient amount of demineralized water to form one gallon of concentrated stock solution, and then diluting each part of the stock solution with 19 parts of demineralized water. As is the case with the stannous chloride solution, the diluted palladium chloride is preferably mixed with air at a pressure of about 60 to 80 pounds per square inch and sprayed onto the glass at a rate of about 500 to 700 milliliters per minute.

The spacing between a spray gun and a subsequent rinse set in section **200** may vary within wide limits depending, for example, upon the rate at which the plate is advancing, the dimensions of the fan-shaped spray pattern generated by each nozzle, the rate of traverse of each gun, and the like. However, it is preferable to arrange the various rinse sets and guns in section **200** such that the time required for the leading edge of a given plate **3** to advance from each spray gun to the next successive rinse gun set is from about 10 to about 90 seconds. In addition, as described more fully below, it is preferred that each angled crossfire spray rinse set be spaced from its respective spray gun so that the edges of the spray from the rinse set slightly overlap the edges of the spray from the spray gun.

As illustrated, the plate then passes from section **200** of the apparatus to section **300** thereof, wherein a metal and boron-containing coating, preferably nickel-boron, cobalt-boron, iron-boron or a mixture of at least two of said metal-boron coatings is deposited on the now activated surface thereof. The deposition is preferably accomplished by simultaneously spraying and intermixing a metal-containing solution and a boron-containing reducing solution onto the activated surface such that the metal ions present in the contemplated metal solution become reduced to a transparent boron-containing metal film which tenaciously adheres to the activated surface.

It will be appreciated that the number, disposition, and the spacing of the guns which spray the metal solution and the boron-containing reducing solution, and the rate at which they are reciprocated, are determined generally by the rate at which the plate advances, the temperature, pH, and concentration of the intermixed film forming composition and the like, and primarily by the time required for the film forming composition to be substantially depleted in its film forming capacity, and the desired thickness and transparency of the deposited film. The importance of these latter two parameters will become more apparent in view of the illustrative example set forth below.

For the sake of illustration, section **300** is shown in FIGS. **1**, **2** and **5** as having two spray gun sets **302** and **304**, each comprising a first nozzle for dispensing a metal-containing solution, **302A** and **304A**, respectively, and an opposed second nozzle, **302B** and **304B**, respectively, for dispensing a reducing solution. Section **300** also includes three identical angled crossfire rinse sets **301**, **303** and **305**, as described hereinabove. As shown, the spray gun sets **302** and **304** are supported for transverse reciprocating movement, for example, in the manner described for reciprocating spray guns **211** and **214** in onnection with FIG. **4**. However, it should be noted that the gun sets in section **300** must reciprocate much faster than those in section **200** or than those employed in conventional spray techniques for depositing silver, for example. In this connection, it has been found that uniformly and controllably transparent metal-boron coatings can best be made in accordance with the present invention only when the gun sets in section **300** are reciprocated at a rate of at least about 60 to 65 single passes per minute, and preferably from about 72 to about 76 single passes per minute, when the plates being coated are about 4 feet wide and are advanced at a rate of from about 3 to about 6 feet per minute. Thus, for a 4 foot wide plate advanced at a rate of 3½ feet per minute, i.e., 42 inches per minute, a gun wet reciprocating at 74 single passes per minute will complete about 1.75 single passes over each inch segment of the advancing plate. Accordingly, if the width of the applied spray in a direction of travel of the plate is from 10 to 12 inches, each inch segment of the plate will receive from about 17.5 to about 21.1 applications of solution per gun set. Of course, the required number of passes per minute will vary somewhat in accordance with changes in magnitude of the various parameters discussed herein. For example, the required number of passes would increase when the plates being coated are advanced more rapidly than about 3 to about 6 feet per minute.

The spray guns of each set **302** and **304** are connected through respective supply lines (not shown) to air under pressure at about 20 to about 60 pounds per square inch. In turn, the respective supply lines are in fluid communication with prepared metal and reducing solutions stored in separate solution tanks or containers (not shown), preferably of such size to hold a reasonable supply of fluid, such that when the prepared solutions are injected into the supply lines by any conventional means (not shown), the solutions are fed through the lines and sprayed from the guns in a fan-shaped pattern. It will be appreciated that the magnitude of air pressure required for a satisfactory spraying

varies considerably with the design of the guns and the various parameters of the solutions employed. In this connection, satisfactory results have been obtained with pressures as low as about 20 pounds per square inch and as high as about 55 pounds per square inch. Pressures in the range of about 25 to about 40 pounds per square inch are preferred. The rates at which the respective prepared solutions are sprayed from each gun may vary, but it is preferred that the rates of flow be maintained at about 300 to about 2,000 milliliters per minute per gun.

As illustrated in FIGS. **8, 9** and **10,** each of the guns **302**A and **302**B in the metal depositing spray gun set **302** is preferably designed to provide a substantially fanshaped stream which opens only a few degrees in the direction transverse to the advancing plate, and which opens in the direction of travel of the plate such that the stream contacts the advancing plate in an elliptical pattern having a major diameter of from about 8 inches to about 14 inches, and preferably from about 10 inches to about 12 inches in length (FIG. **8**). Spray gun set **304** functions in the same manner.

The guns in each metal salt-reducing solution set are arranged to have an included angle of from about 80° to about 120° between the stream of composition they dispense. To accomplish this end, each of the metal salt solution dispensing guns is inclined obliquely from the vertical about 40° to about 60° toward a mutually opposed reducing solution dispensing gun, and vice versa in a vertical plane common to the dispensing guns of the set (FIG. **10**). This arrangement is desirable so that the metal and reducing solutions are effectively and thoroughly mixed as they approach and strike the surface of the activated glass plate.

Referring again to FIG. **11,** there is shown a detailed perspective view of the angled crossfire rinse set **301** and the spray gun set **302.** FIG. **11** shows another important feature of the preferred embodiment of the present invention, i.e., the spray M from spray gun set **302** overlaps the spray W from the last nozzle of the angled crossfire rinse set **301** by about one-eighth or about one-fourth of an inch at the upper glass surface. Ideally, the edge of spray M should just touch the edge of spray W to prevent backflow and therefore puddling of the rinsing medium beneath spray M, but since it is not practical to adjust the extent of sprays M and W with precision, and, since it is detrimental for the sprays to be spaced (for reasons stated below), they are slightly overlapped.

In the past, spray rinses have been used to keep the glass surface clean prior to either a sensitization spray or a coating spray. The angled crossfire rinse set of the present invention performs this function at least as well as any prior-art rinse apparatus. In addition, the angled crossfire rinse set serves to insure that there is a uniform water film on the glass surface, immediately upstream of the rinse set, where it is sprayed with either a sensitizing composition or a coating composition. In practice, the water thickness should be maintained at about 0.05 inch, and preferably between about 0.03 inch and about 0.10 inch, for the metal-boron coating to adhere tenaciously to the glass surface. It is most important, however, that the water film be uniform in thickness, and the angled crossfire rinse set of the present invention insures that a uniform thickness is obtained.

If the rinse set spray W is spaced from the metal-boron spray M (or from the sensitizer spray), the water from the rinse set circles back to the metal-boron spraying area (or to the sensitizer spray area) and an uneven coating can result. If the spray from the rinse set overlaps the spray from the metal-boron gun by more than about one-fourth of an inch, a non-uniform coating can result due to the fact that a considerable portion of the spraying area is agitated while it is being sprayed.

As the plate advances beyond each spray gun set **302** and **304,** the intermixed film forming composition which is uniformly distributed on the surface of the plate is permitted to rest relatively quietly. This quiescent period or period of minimum turbulence is highly desirable since it enables the film forming composition to deposit a transparent coating which is substantially free from visual defects normally attributed to turbulence or agitating of the filming composition during deposition. In addition, it is during this quiescent period that the intermixed filming compositions contemplated herein undergo a change in their capacity for depositing a film such that the rate of film deposition, which is initially relatively rapid, decreases and then effectively completely ceases while the deposited film is still transparent. While the time required for this change in filming capacity to occur will vary considerably depending upon the chemistry of the actual filming composition employed, a filming composition comprising equal amounts of the nickel acetate solution and borohydride reducing solution, illustrated respectively in Tables I and II of U.S. Pat. No. 3,723,158 will normally undergo a substantial decrease in its filming capacity within from about 10 seconds to a few minutes, e.g. 5 minutes. In this regard, a glass plate that is coated with a metal and boron-containing film at room temperature by a single 15 second spray application of the above illustrated intermixing filming composition will normally have a luminous transmission of from about 30 to about 40 percent when the filming capacity of the composition has depleted and filming has effectively ceased.

Referring once again to FIGS. **1** and **5,** it will be appreciated that once the film forming composition has become dead, i.e., depleted of its filming capacity, it may be removed from the plate by any convenient means without affecting the thickness, and thus the transparency of the film. It will also be appreciated that the lowest degree of transparency obtainable will depend primarily upon the amount of film that will deposit from a given film forming composition before it becomes dead, the number of gun sets in section **300,** and the distance between each gun set. The effect of these variables on the thickness, uniformity and transparency of metal-boron films formed in accordance with this invention will be more fully appreciated in light of the example recited hereinbelow.

After undergoing the quiescent period after its exposure to the mixed composition dispensed by spray gun set **304,** the plate has a luminous transmittance of about 15 to 25 percent. If a third spray gun set is used (not illustrated), a luminous transmittance of about 10 percent is obtained. Each additional gun provides a quiescent period designed to allow the partially formed metal-boron film to increase in thickness uniformly in the substantial absence of adverse effects caused by turbulence. Even more important, however, this period is designed to allow sufficient time for the film forming

composition on the surface of the plate to become substantially depleted of its film-forming capacity so that the rate of deposition of the metal-boron film will have materially slowed down, and preferably effectively ceased, before the plate is rinsed under set **305.** In this latter connection, it will be appreciated that the necessary distance between the rinse set **305** and the last metal depositing gun set **304** is related to the rate at which the plate is advanced. Thus, when maintaining all of the various parameters within the bounds described herein, the distance between the final rinse set **305** and the last spray gun set **304** should be at least about 30 inches, and preferably at least about 35 to **40** inches to provide a final film thickness corresponding to a luminous transmittance of about 20 percent.

After undergoing a final water rinse under set **305,** the plate advances into section **400** of the coating apparatus where it is dried by means of a suitable air knife **401** (FIG. **6**). The air knife **401** may comprise any conventional blow-off device, but it is preferred to employ a high volume-low pressure knife to avoid disturbing the quality of the metal-born film. For example, it is desirable to employ a knife that operates at a pressure of about 3 to 7 ounces per square inch, while forcing from about 300 to about 400 cubic feet of air per minute against the metal-boron coated glass plate.

After passing beneath the air knife, the coated plate passes into section **500** where the thickness of the deposited film is measured by a conventional measuring device **501.** Thereafter, the transparent glass plate is removed from the rollers **2** and is ready for use.

The present invention is applicable in forming transparent metal-boron films on clear plastic, e.g., polymethyl methacrylate, and glasses, especially soda-lime-silica glasses, but can be used to film a wide variety of glass, ceramic, glass-ceramic, siliceous and calcareous based compositions. For example, this invention can be used to provide metal-boron and particularly nickel-boron films on the following types of glasses: soda-lime-silica glasses; alkali-alumina-silica glasses, such as those containing lithia as a component alkali; alkali-zirconia-silica glasses; alkali-alumina-zirconia-silica glasses; borosilicate glasses, etc. Bearing this in mind, the present invention is described hereinbelow with specific reference to soda-lime-silica glass.

The soda-lime-silica glass to be treated can be a clear glass or it can be a colored glass tinted by the introduction of various conventional materials into the glass forming batch. These latter glasses are often referred to as heat absorbing glasses especially when they contain iron oxide. Representative soda-lime-silica glass bases which can be treated in accordance with this invention usually contain 65 to 75 percent by weight SiO_2, 10 to 18 percent by weight Na_2O, 5 to 15 percent by weight CaO, 1 to 5 percent by weight MgO, 0 to 1.0 percent by weight Na_2SO_4, 0 to 5 percent by weight aluminum oxide (Al_2O_3), 0 to 8 percent by weight K_2O, 0 to 8 percent by weight B_2O_3, 0 to 1 percent by weight iron oxide (Fe_2O_3), and 0 to 0.7 percent by weight of NaCl, SO_3, As_2O_5, BaO, NiO, CoO and Se and combinations thereof.

A representative range of composition for soda-lime-silica glasses is listed as follows (wherein the given amounts of metals listed are determined as their oxides, except as otherwise noted):

Component	Percent by Weight
SiO_2	68 – 73.5
Na_2O	12 – 17
CaO	7 – 12
MgO	2 – 4
Na_2SO_4	0 – 0.8
NaCl	0 – 0.3
Fe_2O_3	0.05 – 0.09
Al_2O_3	0 – 3.5
B_2O_3	0 – 6
K_2O	0 – 1.5
As_2O_5	0 – 0.5
BaO	0 – 0.7
NiO	0 – 0.1
CoO	0 – 0.1
SO_3	0 – 0.5
Se	0 – 0.1

This invention will be further understood from the specific example which follows. It should be noted, however, that the present invention is not necessarily limited to specific materials, temperatures, contact times and pH values noted in the below example.

EXAMPLE

A 40 × 40 × ¼ inch commercial soda-lime-silica glass plate is coated with a nickel-boron film with the apparatus illustrated schematically in FIG. **1.** Four blockers are used, each comprising a 3-inch thick cattle hair felt disc of 8 inch diameter. The blockers are arranged at 12 inch centers in the direction parallel to the rollers, hereafter referred to as the transverse direction, and are rotated at about 350 revolutions per minute. The blockers are oscillated about 4 inches in the transverse direction at a frequency of about 15 cycles per minute. Four 6 inch diameter rotary cup brushes are arranged at 12 inch centers in a transverse direction such that the longitudinal distance between the blockers and the rotary cup brushes is about 9 inches. The rotary cup brushes are equipped with number **12** nylon bristles and are rotated at about 350 revolutions per minute. The brushes are also oscillated about 4 inches in the transverse direction at a frequency of 15 cycles per minute. During operation, the blockers are supplied with a mixture of cerium oxide and tap water, while a spray of tap water is applied beneath the rotary cup brushes. The rotary cylinder brush has a 6 inch diameter, comprising number **12** nylon bristles, and has its axis disposed 8 inches from the rotary cup brushes. The first and second angled crossfire rinse sets, as well as the tin composition dispensing gun and the palladium composition dispensing gun, i.e., all of the rinse sets and the guns in section **200,** are mounted from a single boom that reciprocates in a transverse direction at a rate of about 45 single passes per minute. Each of the rinse nozzles comprises a single UniJet-T8002 spray nozzle (manufactured by Spraying Systems Company, Dellwood, Ill.) and is operated at a pressure of about 40 pounds per square inch, at an average flow rate of about 0.2 gallon of demineralized water per minute. Each of the tin and palladium composition dispensing guns comprises a single, type C, spray gun equipped with a Paasche U2, F2-8 nozzle, manufactured by Paasche Air Brush Company, Chicago, Illinois, and operated at an air pressure of about 70 pounds per square inch and a flow rate of about 500 milliliters of the solution described below per minute. The distance between the rotary cylinder brush and the first crossfire rinse set

201 is about 30 feet, while the distance from each gun to the next respective gun is about 5 feet.

Angled crossfire rinse set **301** in section **300** is approximately 7 inches from spray gun **302.** In addition, gun set **302** is spaced approximately **63** inches from gun set **304.** The distance between the tip of the nickel solution dispensing gun and the tip of the reducing solution dispensing gun is about 10 inches. All of the spray guns in section **300** employ Paasche U2, F2-8 nozzles, which are arranged so that the tip of each nozzle is about 7 inches above the surface of the glass being coated, and so that each respective gun set generates a fan-shaped stream of intermixed film forming solution that contacts the glass surface in a generally elliptical pattern having a major diameter of 11 inches extending in the longitudinal direction. All of the rinse sets and the guns in section **300** are mounted from a single boom that reciprocates in the transverse direction at a rate of about 72 passes per minute which is equal to 36 round trips per minute. During operation, each of the metal deposition gun sets in section **300** is maintained at a pressure of about 40 pounds per square inch and a flow rate of about 800 milliliters of solution per minute, while the final crossfire rinse gun **305** is operated at a pressure of about 40 pounds per square inch at an average flow rate of about 0.2 gallon of demineralized water per minute per nozzle. The distance between set **305** and the last metal depositing gun set **304** is about 70 inches.

The air knife **401** comprises an elongated metal housing having a 0.002 inch wide delivery slot extending along the length of its bottom wall. The knife **401** is disposed at a 45° angle relative to the advancing plate and had its centermost portion spaced about 8 feet from the final rinse set **305.** The air knife is operated at about 5 ounces per square inch and at a flow rate of about 350 cubic feet per minute. The ambient air temperature is about 82° Fahrenheit, while the temperature of the demineralized and tap water used throughout this example is about 63° Fahrenheit. The glass plate is advanced at a rate of about 5 feet per minute, while the slot opening of the air knife is spaced about one-half inch from the plate. On the basis of a liter of solution, each of the prepared aqueous solutions employed has the following composition:

Nickel Solution

Nickelous acetate	5.0 grams
Boric acid	2.5 grams
Sodium gluconate	9.0 grams
Hydrazine sulfate	0.5 gram
Water	Added to 1 liter
Ammonium hydroxide	Added to pH 7.4
Ethomeen C-20*	0.06 gram

*Ethomeen C-20 (trademark of Armour and Company) is a cocoamine having an average molecular weight of 645 and the following generalized formula:

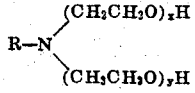

wherein R is derived from a cocoamine and $x+y=10$.

Reducing Solution

Sodium borohydride	0.5 gram
Water	Added to 1 liter
Sodium hydroxide	Added to pH 11.6
Ethomeen C-20	0.30 gram

Tin Solution

Stannous chloride	0.2 gram
Hydrochloric acid (12 N)	0.04 milliliter
Water	Added to 1 liter

Palladium Solution

Palladious chloride	0.02 gram
Hydrochloric acid (12 N)	0.04 milliliter
Water	Added to 1 liter

The temperature of each of these solutions is about 70° Fahrenheit. The pH of the intermixed nickel an borohydride solutions is about 7.7. A nickel film is formed which contains about 5 to 10 percent by weight boron and the resulting coated plate has a luminous transmission of about 22 percent. The film is very adherent to the glass plate and is very uniform in appearance. It has an initial resistivity of 300 ohms per square.

The procedure is utilized to prepare several examples. The results were very reproducible. Uniform films of a desired light transmission can be produced in continuous fashion.

The invention disclosed and illustrated shows an angled crossfire rinse set immediately before each spray gun set, but it should be understood that this has been done for illustrative purposes only and, in actuality, improved results are obtained when an angled crossfire rinse set, as described, is used preceding any of the spray operations. It is most important that the angled crossfire rinse gun set be used before the metal-boron spray because the uniformity of the thickness of the coating provided by this spray is most critical to the uniformity of the transparency of the finished product.

While the invention has been described for use in the application of a metal-boron coating on a glass substrate, its use should not be limited to such. The angled crossfire rinse set may be used wherever there is a need to provide a rinsing function on a surface which requires a uniformly thick film of rinsing medium such as water. Each angled crossfire rinse set has been illustrated with six nozzles, but one skilled in the art will appreciate that this number may vary or the number of nozzles to be used may be less than the number provided, depending on the amount of matter to be rinsed from the glass surface and the rate of flow of rinsing medium permitted by the sensitivity of the surface to be rinsed.

The particular arrangement described above including ranges of oblique angles of orienting the rinse nozzles, the rinse pipes and spray guns with respect to the article movement path have been selected to provide maximum effectiveness of the rinse to avoid either the formation of puddles or circling back of rinse water at a rate of application sufficient to drive off excess water from the trailing and side edges of the work piece without harmful effects on the previous coating. It is understood that stronger rinses may be used to rinse less sensitive films without departing from the principles enunciated in the claimed subject matter that follows.

I claim as my invention:

1. In a method of coating a flat surface of an article wherein the surface is coated by moving the article forward, downstream along an article movement path with the surface of the article in a substantially horizontal plane beneath a source of rinsing medium; reciprocating the source along an axis of reciprocation that is

spaced from and transverse to the article movement path; applying the rinsing medium to the surface of the article as the article moves along the article movement path; and applying a coating solution to the rinsed surface of the article at a coating station positioned immediately downstream of the source, the improvement which comprises:

applying the rinsing medium to the flat surface as a fan-shaped spray of rinsing medium disposed so that essentially obliquely downward, and rearward and outward forces are exerted closely adjacent the coating station upon said surface to move the rinsing medium over said surface in directions upstream from the coating station and toward the trailing and side edges of said article so that the surface of the article has a rinsing medium film of substantially uniform thickness thereupon as the article moves into the coating station whereby a coating of substantially uniform thickness is formed on the flat surface of said article.

2. The improved method as set forth in claim **1** wherein said step of applying a fan-shaped spray having obliquely downward, rearward and outward forces includes:

applying the fan-shaped spray of rinsing medium such that the fan-shaped spray has an apex angle S from the source onto the flat surface of the article in a direction that forms an angle A with the article movement path that is at least 90° plus half of angle S.

3. The improved method as set forth in claim **2** wherein said step of applying a fan-shaped spray of rinsing medium having obliquely downward, rearward and outward forces further includes:

applying the fan-shaped spray of rinsing medium onto the flat surface of the article in a direction that is from about 35° to about 50° from a vertical axis.

4. The improved method as set forth in claim **3** wherein the rinsing medium is sprayed toward a first direction onto the flat surface of the article as the source moves along the reciprocating axis toward the first direction, and the rinsing medium is sprayed toward a second direction onto the flat surface of the article as the source moves along the reciprocating axis toward the second direction wherein the second direction is opposed to the first direction.

5. The improved method as set forth in claim **4** wherein the coating is applied by a spray from a spray gun set which overlaps the spray of rinsing medium from the source by an amount sufficient to insure that the rinsing medium does not puddle beneath the spray from the spray gun set.

6. The improved method as set forth in claim **5** wherein the spray from the spray gun set overlaps the spray of the rinsing medium by about one-eighth to about one-fourth of an inch.

7. In a method of coating a flat surface of an article wherein the surface is coated by conveying the article along an article movement path into a rinsing station and a coating station positioned downstream of the rinsing station such that the surface lies in a generally horizontal plane; applying a rinsing medium from a source of rinsing medium to the surface at the rinsing station as the surface moves along the horizontal plane beneath the source; and applying a coating solution to the rinsed surface at the coating station wherein the rinsing medium on the surface has substantially varying thicknesses across the surface as the article is conveyed into the coating station; the improvement which comprises:

applying a spray of a rinsing medium having a fan-shaped pattern extending essentially obliquely downward, and rearward and outward so as to exert forces against the rinsing medium on the flat surface of the article to move the rinsing medium upstream of the coating station toward the trailing and side edges of the article as the article is conveyed into the coating station to form a rinsing medium on the surface of the article having substantially uniform thickness thereupon as the surface moves into the coating station whereby a coating of substantially uniform thickness is formed on the flat surface of said article.

8. The improved method as set forth in claim **7** wherein step of applying forces to the rinsing medium on the flat surface of the article includes:

reciprocating the source along an axis of reciprocation that is spaced from and transverse to the article movement path; and

applying said spray of rinsing medium of a fan-shaped pattern having an apex angle S from the reciprocating source onto the flat surface of the article in a direction that forms an angle A with the article movement path that is at least 90° plus half of angle S.

9. The improved method as set forth in claim **8** wherein the force applying step further includes:

spraying rinsing medium onto the surface of the article in a direction that is from about 35° to about 50° from a vertical axis to the surface of the article.

10. The improved method as set forth in claim **8** wherein the rinsing medium is sprayed toward a first direction onto the surface of the article as the source moves along the reciprocating axis toward the first direction, and the rinsing medium is sprayed toward a second direction onto the surface of the article as the source moves along the reciprocating axis toward the second direction wherein the second direction is opposed to the first direction.

11. The improved method as set forth in claim **7** wherein the rinsing medium is applied by a spray from the source of rinsing medium and the coating solution is applied by a spray from a spray means, including the step of:

positioning the source of rinsing medium relative to the spray means such that the spray of the rinsing medium overlaps the spray from the spray means by an amount sufficient to insure that the rinsing medium does not puddle beneath the spray from the spray means.

12. The improved method as set forth in claim **11** wherein the spray from the spray means overlaps the spray of rinsing medium from the source by about one-eighth to about one-fourth of an inch.

* * * * *